DEC-11-HG1EA-A-D

GT40 graphic display terminal engineering drawings

digital equipment corporation · maynard. massachusetts

digital EQUIPMENT CORPORATION MAYNARD MASSACHUSETTS

DRAWING DIRECTORY

"THIS DRAWING AND SPECIFICATIONS, HEREIN, ARE THE PROPERTY OF DIGITAL EQUIPMENT CORPORATION AND SHALL NOT BE REPRODUCED OR COPIED OR USED IN WHOLE OR IN PART AS THE BASIS FOR THE MANUFACTURE OR SALE OF ITEMS WITHOUT WRITTEN PERMISSION. COPYRIGHT ©10/23/72 , DIGITAL EQUIPMENT CORPORATION"

CUSTOMER PRINT SET INDEX

THIS IS PRINT SET

SEQUENCE		SEQUENCE	
GRAPHIC TERMINAL (GT4Ø)	A-PL-GT4Ø-Ø-Ø	CHAR. GEN. LOGIC TIMING	D-TD-GT4Ø-Ø-16
KEYBOARD ASSY (LK4Ø)	B-DD-LK4Ø-Ø	WIRE LIST	K-WL-GT4Ø-Ø-WL
DISPLAY (VR14)	A-ML-VR14-Ø	SCOPE CABLE	D-IA-7008993-0-0
VT4Ø COMPUTER ASSY	B-DD-VT4Ø-Ø	ASYNC LINE INTERFACE	B-DD-DL11-Ø
POWER CONTROL ASSY	D-AD-7008930-0-0	LIGHT PEN AMPLIFIER	B-DD-375-Ø
BASE DIAGRAMS	D-SP-GT4Ø-Ø-2		
INTERCONNECT DIAGRAM	D-IC-GT4Ø-Ø-3		
DISPLAY PROCESSOR	D-BD-GT4Ø-Ø-4		
SET GRAPHIC MODE	D-FD-GT4Ø-Ø-5		
DISPLAY JUMP	D-FD-GT4Ø-Ø-6		
NO OPERATION	D-FD-GT4Ø-Ø-7		
LOAD STATUS REGISTER A	D-FD-GT4Ø-Ø-8		
LOAD STATUS REGISTER B	D-FD-GT4Ø-Ø-9		
GRAPH X OR GRAPH Y	D-FD-GT4Ø-Ø-10		
POINT MODE	D-FD-GT4Ø-Ø-11		
VECTOR MODE	D-FD-GT4Ø-Ø-12		
SHORT VECTOR OR REL PT.	D-FD-GT4Ø-Ø-13		
CHARACTER GEN.	D-FD-GT4Ø-Ø-14		

UNIT VARIATIONS

VAR	TITLE	PRINT SET GT4Ø-Ø
GT4Ø-AA	GRAPHIC TERM (GT4Ø) (115V,60HZ)	x
GT4Ø-AB	GRAPHIC TERM(GT4Ø) (23ØV,50HZ)	x
GT4Ø-BA	GRAPHIC TERM(GT4Ø) (115V,60HZ)	x
GT4Ø-BB	GRAPHIC TERM(GT4Ø) (23ØV,50HZ)	x

REVISIONS	REV	CHG NO.	DATE
	A	GT40-4	11/72
	B	GT40-7	2/73

USED ON OPTION/MODEL

SHEET 1 OF 3

DRN. C.MCCOY	DATE 10/16/2	TITLE: GRAPHIC TERMINAL(GT4Ø)
CHK'D.	DATE 10-22-72	
PROJ ENG.	DATE 10/24/72	
PROD.	DATE 10/24/72	SIZE B · CODE DD · NUMBER GT4Ø - Ø · REV B
FIELD SERV.	DATE 10/26/72	DIST

DAB 106

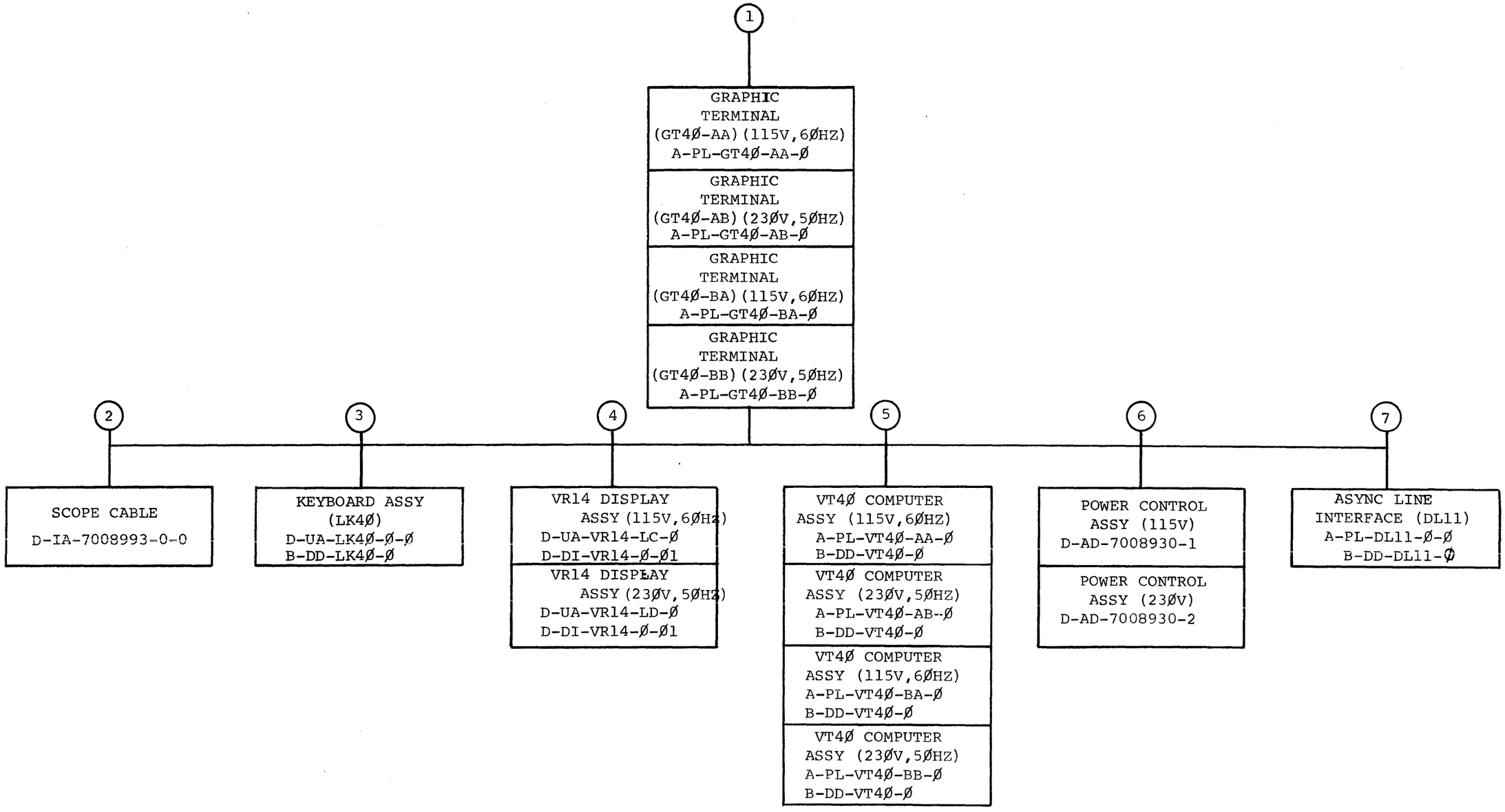

TITLE		SIZE	CODE	NUMBER	REV
GRAPHIC TERMINAL (GT4Ø)	SHEET 2 OF 3	B	DD	GT4Ø-Ø	B

ELECTRICAL

CUSTOMER PRINT SET GT4Ø-Ø	MFG. SET	FIND NO.	DRAWING NO.	REV	NO OF SHT	DESCRIPTION	OPTION NO./FILE DATE
x		1	D-SP-GT4Ø-Ø-2	*	4	BASE DIAGRAMS	
x			D-IC-GT4Ø-Ø-3	*	1	INTERCONNECT DIAGRAM	
x			D-BD-GT4Ø-Ø-4	*	1	DISPLAY PROCESSOR	
x			D-FD-GT4Ø-Ø-5	*	1	SET GRAPHIC MODE	
x			D-FD-GT4Ø-Ø-6	*	1	DISPLAY JUMP	
x			D-FD-GT4Ø-Ø-7	*	1	NO OPERATION	
x			D-FD-GT4Ø-Ø-8	*	1	LOAD STATUS REGISTER A	
x			D-FD-GT4Ø-Ø-9	*	1	LOAD STATUS REGISTER B	
x			D-FD-GT4Ø-Ø-1Ø	*	1	GRAPH X OR GRAPH Y	
x			D-FD-GT4Ø-Ø-11	*	1	POINT MODE	
x			D-FD-GT4Ø-Ø-12	*	1	VECTOR MODE	
x			D-FD-GT4Ø-Ø-13	*	1	SHORT VECTOR OR REL. POINT	
x			D-FD-GT4Ø-Ø-14	*	1	CHARACTER GENERATOR	
			A-SP-GT4Ø-Ø-15	*	39	ENGINEER SPECIFICATIONS	
x			D-TD-GT4Ø-Ø-16	*	5	CHAR. GEN. LOCK TIMING	
C			K-WL-GT4Ø-Ø-WL	B		WIRE LIST	
x		2	D-IA-7008993-0-0	#	1	SCOPE CABLE	
		7	A-PL-DL11-Ø-Ø		1	ASYNC LINE INTERFACE	
C			B-DD-DL11-Ø	#	3	ASYNC LINE INTERFACE	DL11-S

MECHANICAL

CUSTOMER PRINT SET GT4Ø-Ø	MFG SET	FIND NO.	DRAWING NO.	REV	NO OF SHT	DESCRIPTION	OPTION NO./FILE DATE
x		1	A-PL-GT4Ø-Ø-Ø	*	1	GRAPHIC TERMINAL (GT4Ø)	
		3	D-UA-LK4Ø-Ø-Ø		2	KEYBOARD ASSY (LK4Ø)	
C			B-DD-LK4Ø-Ø	#	3	KEYBOARD ASSY (LK4Ø)	
		4	D-UA-VR14-Ø-Ø		3	VR14 DISPLAY ASSY	
			A-PL-VR14-Ø-Ø		3	VR14 DISPLAY ASSY (PL)	
C			A-ML-VR14-Ø	##	1	MASTER LIST (VR14)	
		5	A-PL-VT4Ø-Ø-Ø		1	VT4Ø COMPUTER ASSY	
C			B-DD-VT4Ø-Ø	#	3	VT4Ø COMPUTER ASSY	
x		6	D-AD-7008930-0-0	#	1	POWER CONTROL ASSY	
C			B-DD-375-Ø	#	3	LIGHT PEN AMPLIFIER	

CUSTOMER PRINT SET CODES

X = PRINT OF DOCUMENT INCLUDED IN PRINT SET
C = INCLUDES ALL PRINTS INDICATED ON DOCUMENT
S = CONFIDENTIAL AUTHORIZED SIGNATURE REQUIRED

TITLE	SHEET	SIZE	CODE	NUMBER	REV
GRAPHIC TERMINAL (GT4Ø)	3 OF 3	B	DD	GT4Ø-Ø	B

DRB 108

DEC 16-(325) ,362 25-P372

DIGITAL EQUIPMENT CORPORATION
MAYNARD, MASSACHUSETTS

PARTS LIST

MADE BY C.MCCOY	CHECKED R K Ciolla	SECTION
DATE 10/16/72	DATE 10-22-72	1
ENG R K Ciolla	PROD P. McCarthy	ISSUED SECT.
DATE 10-23-72	DATE 10-24-72	

ITEM NO.	DWG NO./PART NO.	DESCRIPTION	QUANTITY/VARIATION GT4Ø-AA	GT4Ø-AB	GT4Ø-BA	GT4Ø-BB
1	D-UA-LK4Ø-Ø-Ø	KEYBOARD ASSY (LK4Ø)	1	1	1	1
2	D-UA-VR14-LC-Ø	VR14 DISPLAY ASSY 115V	1	-	1	-
3	D-UA-VR14-LD-Ø	VR14 DISPLAY ASSY 23ØV	-	1	-	1
4	D-IA-7008993-0-0	SCOPE CABLE	1	1	1	1
5	A-PL-VT4Ø-AA-Ø	VT4Ø COMPUTER ASSY 115V 4K	-	-	1	-
6	A-PL-VT4Ø-AB-Ø	VT4Ø COMPUTER ASSY 23ØV 4K	-	-	-	1
7	A-PL-VT4Ø-BA-Ø	VT4Ø COMPUTER ASSY 115V 8K	1	-	-	-
8	A-PL-VT4Ø-BB-Ø	VT4Ø COMPUTER ASSY 23ØV 8K	-	1	-	-
9	D-AD-7008930-1-Ø	POWER CONTROL ASSY 115V	1	-	1	-
10	D-AD-7008930-2-Ø	POWER CONTROL ASSY 23ØV	-	1	-	1
11	A-PL-DL11-Ø-Ø	ASYNC LINE INTERFACE	1	1	1	1
		* SEE INTERCONNECT DIAGRAM DWG. NO. D-IC-GT4Ø-Ø-3 MODULE UTILIZATION DWG NO. D-MU-VT4Ø-Ø-1, FOR FURTHER INFORMATION.				

TITLE	ASSY NO.	SIZE	CODE	NUMBER	REV.	ECO NO
GRAPHIC TERMINAL (GT4Ø)	SHEET 1 OF 1	A	PL	GT40-0-0		
		DIST.	C			

DEC FORM DEC 16-(325)-1031-N870
DRA 110

digital EQUIPMENT CORPORATION MAYNARD MASSACHUSETTS

DRAWING DIRECTORY

"THIS DRAWING AND SPECIFICATIONS, HEREIN, ARE THE PROPERTY OF DIGITAL EQUIPMENT CORPORATION AND SHALL NOT BE REPRODUCED OR COPIED OR USED IN WHOLE OR IN PART AS THE BASIS FOR THE MANUFACTURE OR SALE OF ITEMS WITHOUT WRITTEN PERMISSION. COPYRIGHT © , DIGITAL EQUIPMENT CORPORATION"

CUSTOMER PRINT SET INDEX

THIS IS PRINT SET

	SEQUENCE	
KEYBOARD ASSY	B-DD-LK4Ø-Ø	
KEYBOARD ASSY	D-UA-LK4Ø-Ø-Ø	
SMALL KEYBOARD	D-AD-5410224-0-0	
CIRCUIT SCHEMATIC	D-CS-5410224-0-1	
LARGE KEYBOARD	D-AD-5409945-0-0	
CIRCUIT SCHEMATIC	D-CS-5409945-0-1	
SERIAL TRANSMITTER	D-CS-M7Ø11-Ø-1	

MFG. SET.

KEYBOARD CABLE	D-IA-7008959-0-0
CABLE, KEYBOARD	D-IA-7008960-0-0
CABLE, INTRA-KEYBOARD	D-IA-7008612-10

UNIT VARIATIONS

VAR	TITLE	PRINT SET LK4Ø-Ø
LK4Ø-Ø	KEYBOARD ASSY (LK4Ø)	X

REVISIONS	DATE	CHG NO.	REV
	1/73	LK4Ø-2	A

USED ON OPTION/MODEL

SHEET 1 OF 3

DRN. C.B.MCCOY	DATE 8/28/72	TITLE KEYBOARD ASSY (LK4Ø)
CHK'D.	DATE	
PROJ ENG.	DATE	
PROD.	DATE 10/26/72	SIZE B · CODE DD · NUMBER LK4Ø-Ø · REV A
FIELD SERV.	DATE	DIST

DRB 106

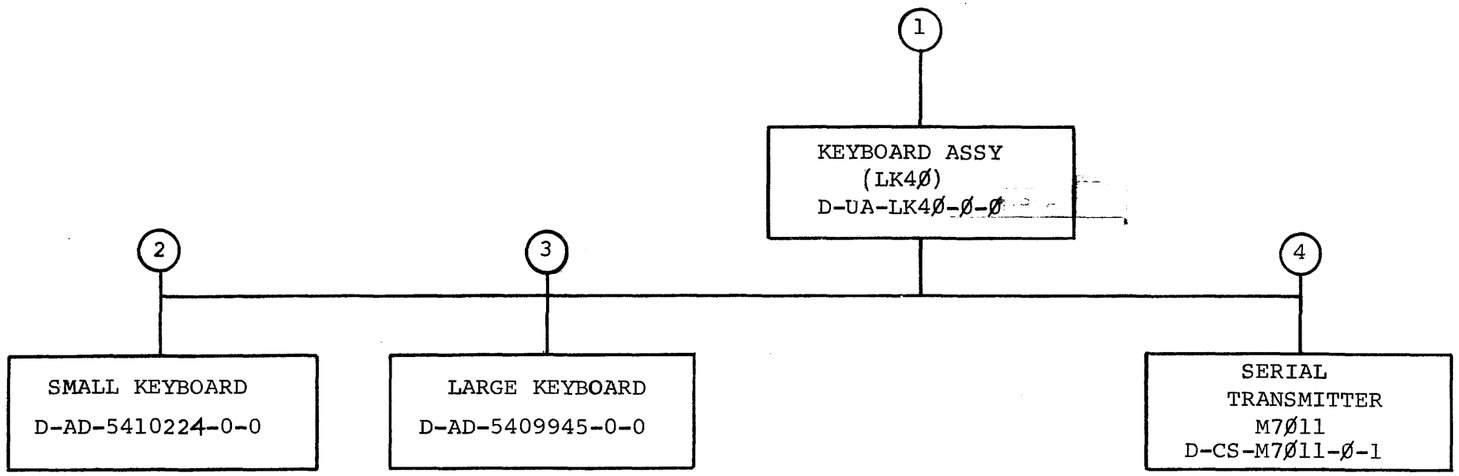

TITLE		SIZE	CODE	NUMBER	REV
KEYBOARD ASSY (LK4Ø)	SHEET 2 OF 3	B	DD	LK4Ø-Ø	A

ELECTRICAL

CUSTOMER PRINT SET LK4Ø	MFG. SET	FIND NO.	DRAWING NO.	REV	NO OF SHT	DESCRIPTION	OPTION NO./FILE DATE
x		1	D-UA-LK4Ø-Ø-Ø	B	2	KEYBOARD ASSY (LK4Ø)	
x		2	D-AD-5410224-0-0	#		SMALL KEYBOARD	
x			D-CS-5410224-0-1	#		CIRCUIT SCHEMATIC	
x		3	D-AD-5409945-0-0	#		LARGE KEYBOARD	
x			D-CS-5409945-0-1	#		CIRCUIT SCHEMATIC	
x		4	D-CS-M7Ø11-Ø-1	#		SERIAL TRANSMITTER	

MECHANICAL

CUSTOMER PRINT SET LK4Ø	MFG SET	FIND NO.	DRAWING NO.	REV	NO OF SHT	DESCRIPTION	OPTION NO./FILE DATE
		1	D-UA-LK4Ø-Ø-Ø	B	2	KEYBOARD ASSY (LK4Ø)	
	x		D-IA-7008959-0-0		1	KEYBOARD CABLE	
			D-IA-7409833-0-0		2	COVER, KEYBOARD	
	x		D-IA-7008960-0-0		1	CABLE, KEYBOARD	
			C-IA-7409761-0-0		1	BRKT, SMALL KEYBD.	
	x		D-IA-7008612-1-0		1	CABLE INTRA KEYBOARD	
			C-IA-7408638-0-0		1	BRKT, LARGE KEYBD.	
			E-IA-7409834-0-0		1	BASE PLATE, KEYBOARD	
			A-PI-3700038-0-0		2	PACKAGING INSTRUCTIONS	

CUSTOMER PRINT SET CODES	
	X = PRINT OF DOCUMENT INCLUDED IN PRINT SET
	C = INCLUDES ALL PRINTS INDICATED ON DOCUMENT
	S = CONFIDENTIAL AUTHORIZED SIGNATURE REQUIRED

TITLE		SIZE	CODE	NUMBER	REV
KEYBOARD ASSY (LK4Ø)	SHEET 3 OF 3	B	DD	LK4Ø-Ø	A

DRB 108

DEC 16-(325)-1062-2B-R972

This drawing and specifications, herein, are the property of Digital Equipment Corporation and shall not be reproduced or copied or used in whole or in part as the basis for the manufacture or sale of items without written permission 1972

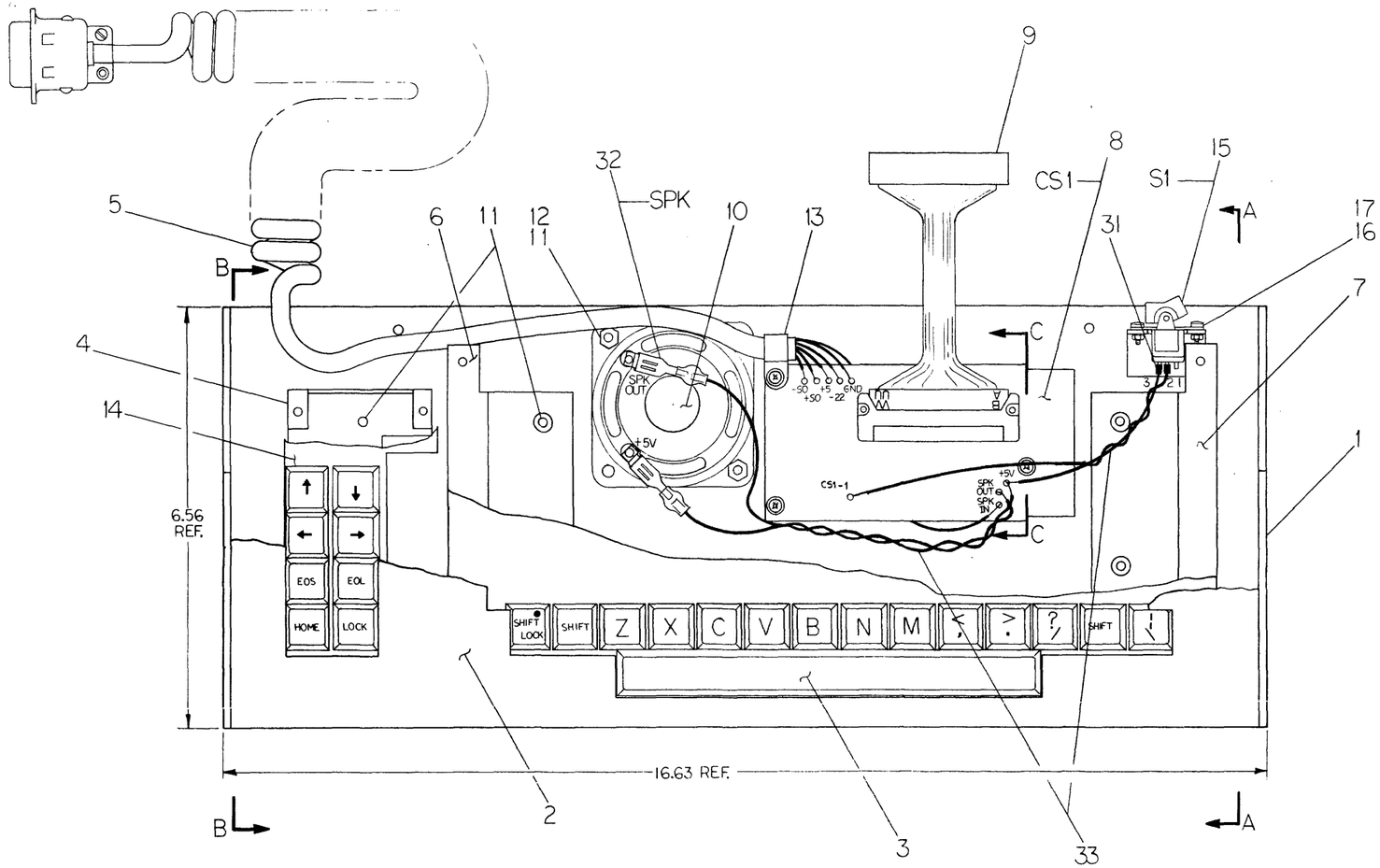

TOP VIEW
PARTIAL TOP COVER AND
PARTIAL LARGE & SMALL
KEYBOARD

ITEM NO.	QTY.	DESCRIPTION	PART NO.
36	3	WASHER, INT. TOOTH #4	9006632
35	4	WASH., FLAT NYLON #4	9006706
34	1	CABLE, INTRA-KEYBOARD	7008612-18
33	A/R	WIRE, #22 AWG TWP WHT/VIO	9107420-79
32	2	TERM., SOLDERLESS	9007917
31	A/R	TUBING, HEAT SHRINK	9107255-09
30	2	SCREW, PHL. PAN HD. #4-40X3/16	9008032-1
29	3	SCREW, PHL. FLT. HD #4-40 X 1/4	9006009-2
28	3	SPACER, FIBER #4-40X 5/16	9007623
27	1	STRAIN RELIEF	9008492-1
26	4	FOOT, HEMISPHERE, 3M SJ5017	9008525
25	4	SCREW, PHL. FLT. HD. #6-32x1/4	9006020-2
24	1	SCREW, PHL. PAN HD. #4-40 X 5/16	9006010-1
23	4	SCREW, PHL. PAN HD. #4-40X 5/16	9006010-1
22	4	WASH., INT. TOOTH LOCK #4	9006632
21	4	SCREW, PHL. PAN HD. #8-32x1/2	9006039-1
20	4	WASH., INT. TOOTH LOCK #8	9006634
19	4	SPACER, AL. HEX. 1/8LG. #4	9006791
18	8	SPACER, AL. HEX. 1/8LG. #8	9006795
17	2	NUT, KEPS #4-40	9006557
16	2	SCREW, PHL PAN HD #4-40x1/4	9008301-1
15	1	SWITCH, #7101-J1-ZBE C&K	1210894
14	1	KEYBOARD, SMALL	5410229
13	1	CLAMP, CABLE NYLON 1/4"	9007081
12	2	NUT, KEPS #8-32	9006563
11	8	SCREW, PHL FLT. HD., #8-32X3/8 LG	9006037-2
10	1	SPEAKER, BELL	1210299
9	1	CABLE, KEYBOARD	D-IA-7008960-0-0
8	1	SERIAL TRANSMITTER	M7011
7	1	BRACKET, LARGE KEYBOARD	7408638-1
6	1	BRACKET, LARGE KEYBOARD	7408638-2
5	1	KEYBOARD CABLE	D-IA-7008959-0-0
4	1	BRACKET, SMALL KEYBOARD	C-IA-7409761-0-0
3	1	KEYBOARD, LARGE	5409945
2	1	COVER, KEYBOARD	D-IA-7409833-0-0
1	1	BASEPLATE, KEYBOARD	E-IA-7409834-0-0

PARTS LIST

FIRST USED ON OPTION/MODEL: LK40

UNLESS OTHERWISE SPECIFIED DIMENSION IN INCHES. TOLERANCES
DECIMALS: .XXX = .005, .XX = .02, .X = .1
ANGLES: ±0° 30'
REMOVE BURRS AND BREAK SHARP CORNERS SURFACE QUALITY ✓
MATERIAL —
FINISH —

DRN CRABBE 8-9-72
CHK'D. 8-21-72
ENG. DATE
PROJ. ENG. 8-26-72
PROD. DATE 8-31-72
NEXT HIGHER ASSY. LK40-0
SCALE 1/1
SHEET 1 OF 2

digital EQUIPMENT CORPORATION MAYNARD MASSACHUSETTS

TITLE: KEYBOARD ASS'Y, (LK40)

SIZE D | CODE UA | NUMBER LK40-0-0 | REV. B
DIST.

REVISIONS

LTR	CHANGE NO	REV
	GT-40-00001	A
	LK40-00002	B

RUNNING 40-107 15988

This drawing and specifications, herein, are the property of Digital Equipment Corporation and shall not be reproduced or copied or used in whole or in part as the basis for the manufacture or sale of items without written permission 1972

WIRE TABLE

ITEM NO.	DESCRIPTION AWG	COLOR	FROM CONNECTION	FROM WITH	TO CONNECTION	TO WITH	REMARKS
5	#18	GRN	—	—	CS1, -22	SOLDER	
		YEL	—		CS1, -50		
		RED	—		CS1, +5		
		GRY	—		CS1, SPK IN		
		BLU	—	—	CS1, +50		
5	#18	BLK	—	—	CS1, GND		
33	#22	WHT	SPK OUT	32	CS1, SPK OUT		
	TWP	VIO	SPK +5V	32	CS1, +5V		
33	#22	VIO	S1-3	SOLDER	CS1, +5V		USE ITEM 31
	TWP	WHT	S1-2	SOLDER	CS1-1	SOLDER	USE ITEM 31

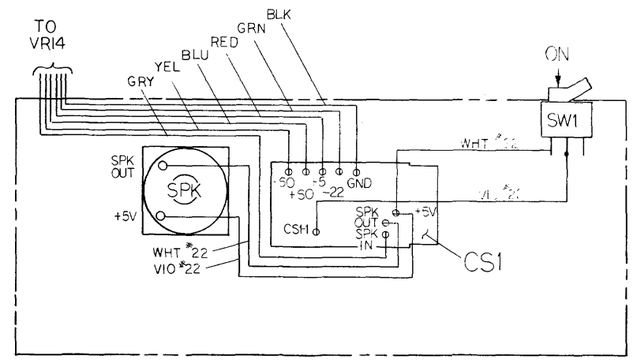

INTERNAL WIRING

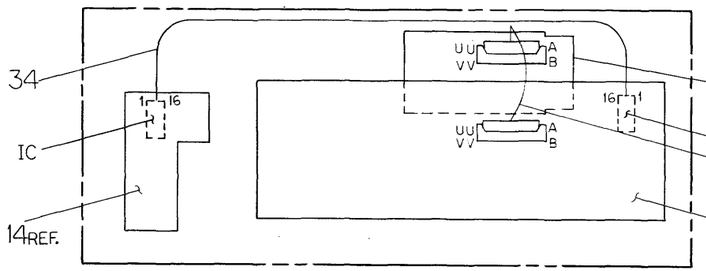

INTERNAL CABLES

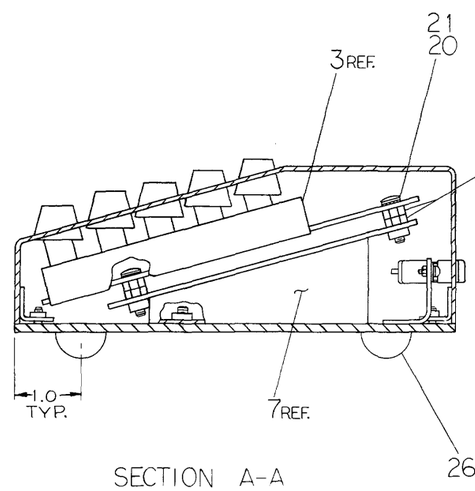

SECTION A-A
(LARGE KEYBOARD)

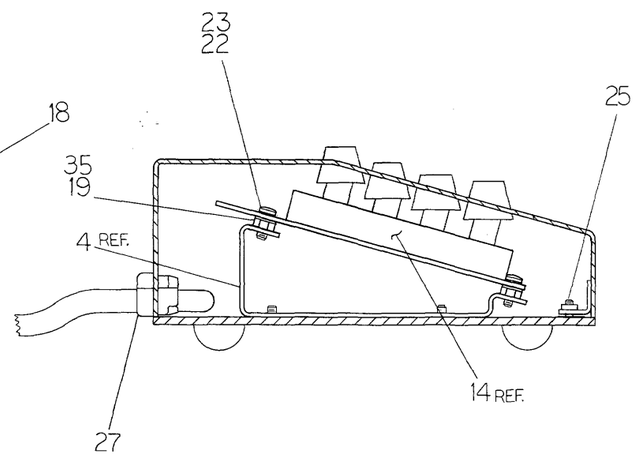

SECTION B-B
(SMALL KEYBOARD)

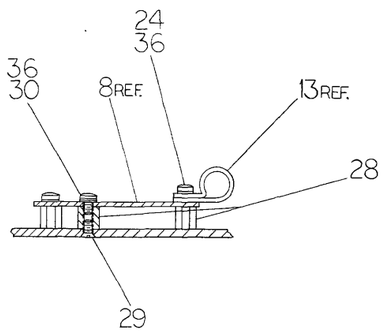

SECTION C-C

FIRST USED ON OPTION/MODEL	QTY.	DESCRIPTION	PART NO.	ITEM NO.
LK40		PARTS LIST		

UNLESS OTHERWISE SPECIFIED DIMENSION IN INCHES. TOLERANCES

DECIMALS	ANGLES
XXX = .005	±0° 30'
XX = .02	
X = .1	

REMOVE BURRS AND BREAK SHARP CORNERS SURFACE QUALITY ✓

MATERIAL —"—

FINISH —"—

DRN. CBMcCoy DATE 8-18-72
CHK'D. DATE
ENG. DATE
PROJ. ENG. DATE 8-26-72
PROD. DATE 8-28-72

NEXT HIGHER ASSY. B-DL LK40 2

SCALE 1/1

SHEET 2 OF 2

digital EQUIPMENT CORPORATION MAYNARD MASSACHUSETTS

TITLE KEYBOARD ASS'Y (LK40)

SIZE	CODE	NUMBER	REV
D	UA	LK40-0-0	B

DIST.

BRUN NG 40-107 1596

REV. | CHANGE NO | CHK

DEC FORM NO DRD 100-A

This drawing and specifications, herein, are the property of Digital Equipment Corporation and shall not be reproduced or copied or used in whole or in part as the basis for the manufacture or sale of items without written permission.

NOTES:
1. FOR REFERENCE INFO REFER TO DWG. NO. D-AD-5409945-0-0

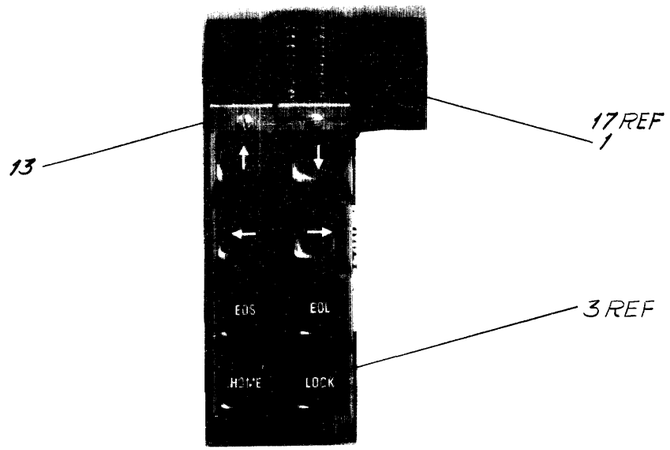

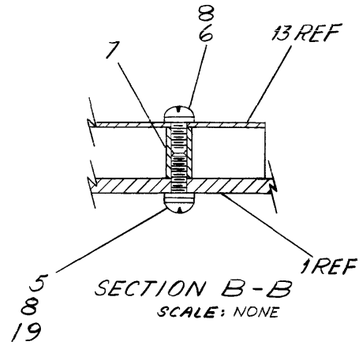

SECTION B-B
SCALE: NONE

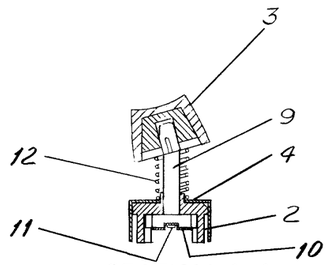

SECTION A-A
SCALE: NONE

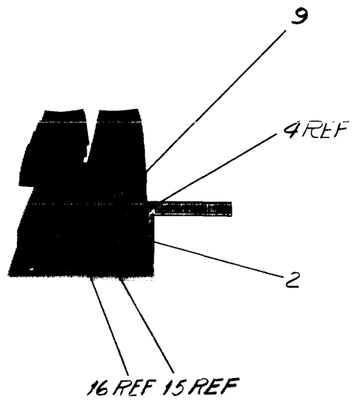

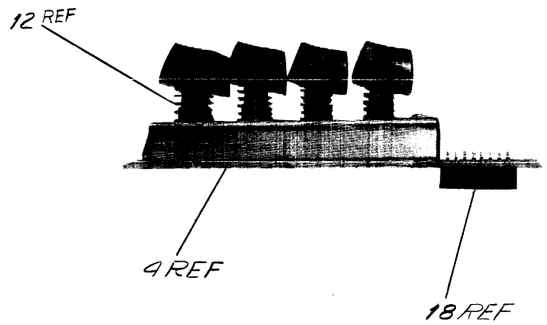

QTY.	DESCRIPTION	PART NO.	ITEM NO.
1	ETCH CIRCUIT BOARD	5010223	20
2	NYLON WASHER	9009263	19
1	SOCKET, 16 PIN IC	1210025	18
8	TRANSISTOR NPN	1510948	17
1	CAP, .005 UF	1001765	16
8	RES, 1/4 W 5% 68 K (CARBON COMP)	1301327	15
REF	CURSOR BOARD (KEYBOARD)	D-CS-5410224-0-1	14
1	DUST COVER, SHORT	B-MD-7410521-0-0	13
8	SPRING, LIGHT	9009161	12
8	SCREW, DRIVE 3/16	9009162	11
8	PLATE, COUPLING	C-MD-7409516-0-0	10
8	KEY SHAFT, STEPPED 90° TURN	D-MD-7410599-0-0	9
4	WASHER, #2	9006631	8
2	STANDOFF, CHANNEL	B-MD-7409538-0-0	7
2	SCREW, #2-56 X 1/4 LG	9006001-4	6
2	SCREW, #2-56 X 5/16 LG	9006002-4	5
2	CHANNEL MACHINING	C-MD-7410520-0-0	4
1 SET	KEYCAP, SINGLE	D-PS-9009198-69-0	3
8	KEY GUIDE	C-MD-7409525-0-0	2
REF	PC BOARD, CURSOR BOARD	D-IA-5010223-0-0	1

PARTS LIST

FIRST USED ON OPTION/MODEL: VTØ5

UNLESS OTHERWISE SPECIFIED DIMENSION IN INCHES TOLERANCES

DECIMALS	ANGLES
XXX ± .005 XX ± .02 X ± 1	±0° 30'

REMOVE BURRS AND BREAK SHARP CORNERS. SURFACE QUALITY ✓

MATERIAL: SEE PARTS LIST

FINISH: —/—/—

DRN. D. Schmidt	DATE 7-19-72	
CHKD. B. Hatrock	DATE 7/27/72	
ENG. Geo. Jeschke	DATE 7-31-72	
PROJ. ENG. D. Widder	DATE 7/31/72	
PROD. R. Davis	DATE 8/1/72	

NEXT HIGHER ASSY.: D-UA-VTØ5-Ø-Ø

SCALE: NONE

SHEET 1 OF 2

digital EQUIPMENT CORPORATION MAYNARD MASSACHUSETTS

TITLE: CURSOR BOARD ASSY (KEYBOARD)

SIZE	CODE	NUMBER	REV.
D	AD	5410224-0-0	

DIST.

REV | CHANGE NO. | REVISIONS

This drawing and specifications, herein, are the property of Digital Equipment Corporation and shall not be reproduced or copied or used in whole or in part as the basis for the manufacture or sale of items without written permission.

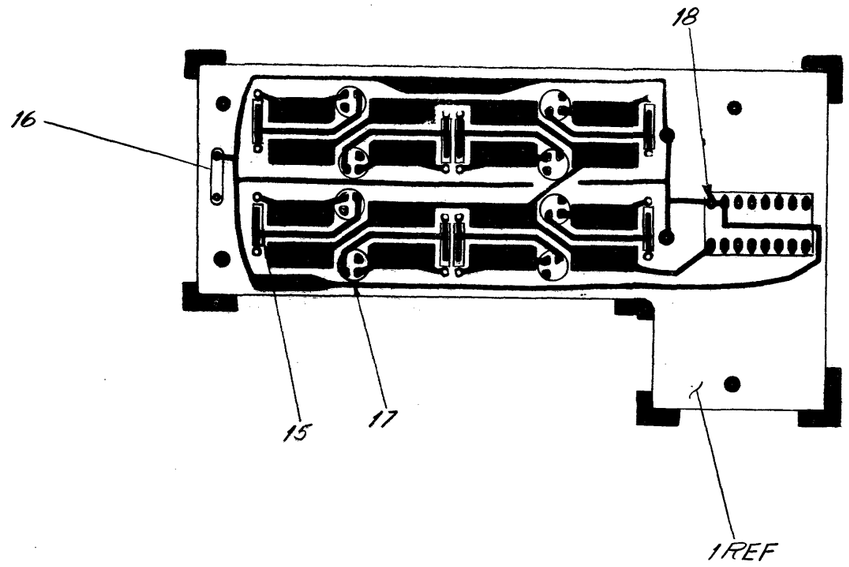

FIRST USED ON OPTION/MODEL	QTY.	DESCRIPTION	PART NO.	ITEM NO.
— / —		PARTS LIST		

UNLESS OTHERWISE SPECIFIED DIMENSION IN INCHES. TOLERANCES

DECIMALS	ANGLES
.XXX = .005	±0° 30'
.XX = .02	
.X = .1	

REMOVE BURRS AND BREAK SHARP CORNERS SURFACE QUALITY ✓

MATERIAL — / —

FINISH — / —

DRN. D. Schmidt	DATE 7-20-72	digital EQUIPMENT CORPORATION MAYNARD MASSACHUSETTS
CHK'D. R. Hutnick	DATE 7-29-72	
ENG. [illegible]	DATE [illegible]	TITLE CURSOR BOARD ASSY (KEYBOARD)
PROJ. ENG. D. Weldon	DATE 7/11/72	
PROD. R. Dam	DATE 9/15/72	
NEXT HIGHER ASSY. — / —		SIZE D CODE AD NUMBER 5410224-0-0 REV.
SCALE NONE		
SHEET 2 OF 2		DIST.

REVISIONS: CHK | CHANGE NO. | REV.

DEC FORM NO DRD 100-A

SIZE D CODE AD NUMBER 5410224-0-0 REV.

This drawing and specifications, herein, are the property of Digital Equipment Corporation and shall not be reproduced or copied or used in whole or in part as the basis for the manufacture or sale of items without written permission

NOTES:

1. KEY 222 IS LOCK FOR KEYS 321 & 322. IT HAS TO BE DEPRESSED FOR OPERATION OF ABOVE KEYS.
2. * FOR REFERENCE INFORMATION SEE DWG. NO. D-CS-5909995-0-1

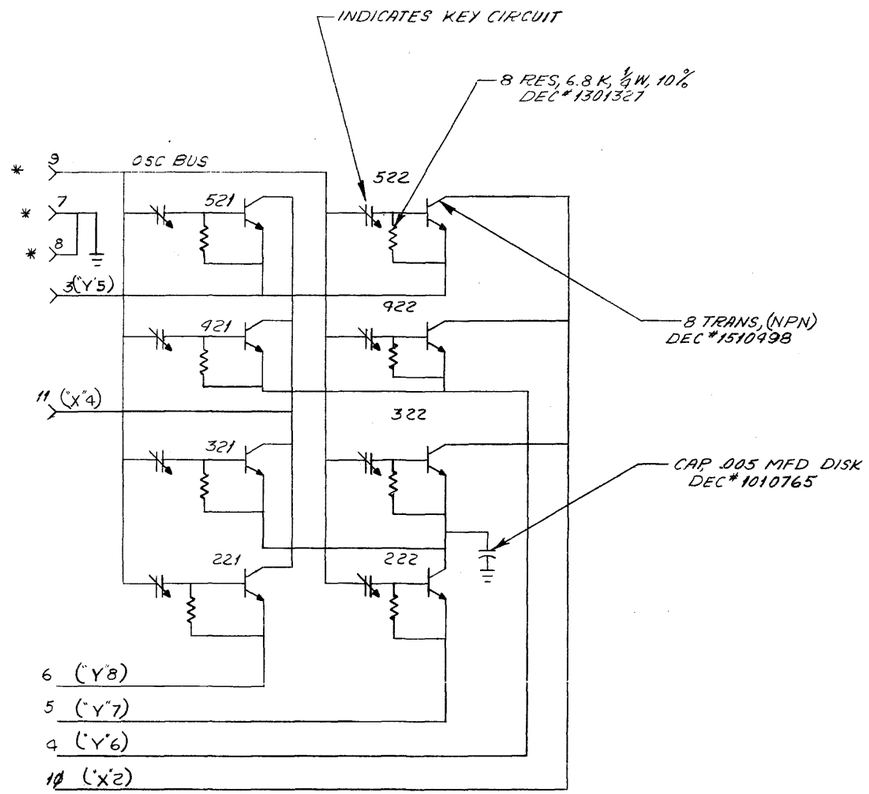

FIRST USED ON OPTION/MODEL	QTY.	DESCRIPTION	PART NO.	ITEM NO.
VTØ5		PARTS LIST		

UNLESS OTHERWISE SPECIFIED DIMENSION IN INCHES. TOLERANCES

DECIMALS	ANGLES
.XXX = .005 .XX = .02 .X = .1	±0° 30'

REMOVE BURRS AND BREAK SHARP CORNERS SURFACE QUALITY ✓

MATERIAL —

FINISH —

DRN. D. Blount	DATE	7/17/72
CHKD. M. Poland	DATE	7/19/72
ENG. h	DATE	8/14/72
PROJ. ENG. h	DATE	8/14/72
PROD. R Davis	DATE	8/14/72

NEXT HIGHER ASSY. —

SCALE NONE

SHEET 1 OF 1

digital EQUIPMENT CORPORATION MAYNARD MASSACHUSETTS

TITLE

CURSOR BOARD (KEYBOARD)

SIZE	CODE	NUMBER	REV.
D	CS	5410224-0-1	

DIST.

REV	REVISIONS	CHK
	CHANGE NO	

BRUNING 40-522 15840

DEC FORM NO DRD 102-B

SIZE D | CODE CS | NUMBER 5410224-0-1 | REV

This drawing and specifications, herein, are the property of Digital Equipment Corporation and shall not be reproduced or copied or used in whole or in part as the basis for the manufacture or sale of items without written permission

NOTES:

*1. IF ITEM #11 (COMPLETE SET) IS ORDERED DO NOT ORDER ITEM #4 (9 KEY SPACE BAR) AS IT IS PART OF COMPLETE SET WHEN ORDERED FROM CONTROL DEVICES. IF INDIVIDUAL KEYCAPS (ITEM #11) ARE ORDERED ITEM #4 MUST THEN BE ORDERED ALSO AS PER PARTS LIST.

2. FOR COMPONENT ASSY INFORMATION ON ITEM #1 (P.C BOARD) REFER TO SHEET #3

3. FOR CIRCUIT SCHEMATIC INFORMATION REFER TO DWG D-CS-5409950-1

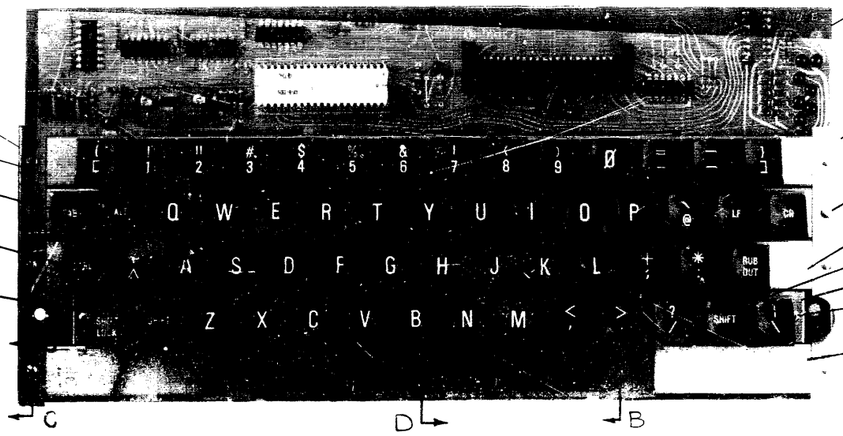

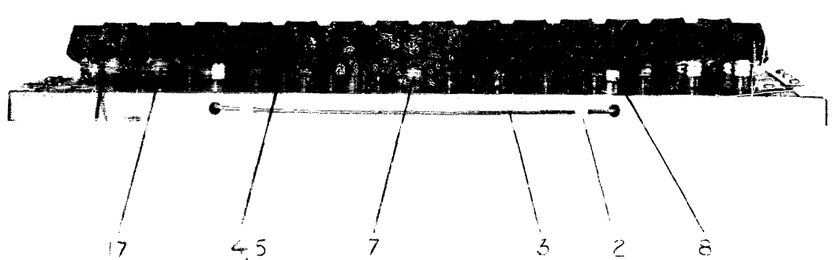

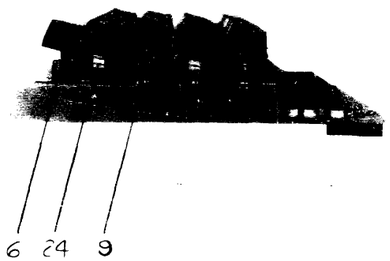

REVISION				
REV	CHANGE NO	CHK	DATE	
A	LK01-0000	BEATTY	4-27-72	
B	LK01-0000	BEATTY	6-22-72	
C	LK01-0000	D.WIDDER	10-22-72	
D	V105-0000	D.WIDDER	12-11-72	
E	5409945	A.WILLIAMS	2-7-73	

QTY.	DESCRIPTION	PART NO.	ITEM NO.
	PARTS LIST		

UNLESS OTHERWISE SPECIFIED DIMENSION IN INCHES TOLERANCES
DECIMALS .XXX .005, .XX .01, .X .1 — ANGLES
REMOVE BURRS AND BREAK SHARP CORNERS SURFACE QUALITY ✓
MATERIAL
FINISH

DRN. D. Schmidt DATE 1-4-73
CHK'D L. Ruag DATE 1-17-73
ENG. R. Reed DATE 1-17-73
PROJ ENG. T.D. Widder DATE 2-1-73
PROD. [illegible] DATE 2-14-73

digital EQUIPMENT CORPORATION MAYNARD MASSACHUSETTS

TITLE: KEYBOARD ASSY

NEXT HIGHER ASSY. B-DD-LK01-Ø

SIZE D | CODE AD | NUMBER 5409945-0-0 | REV E

SCALE 1/1

SHEET 1 OF 3

DIST.

SIZE D | CODE AD | NUMBER 5409945-0-0 | REV E

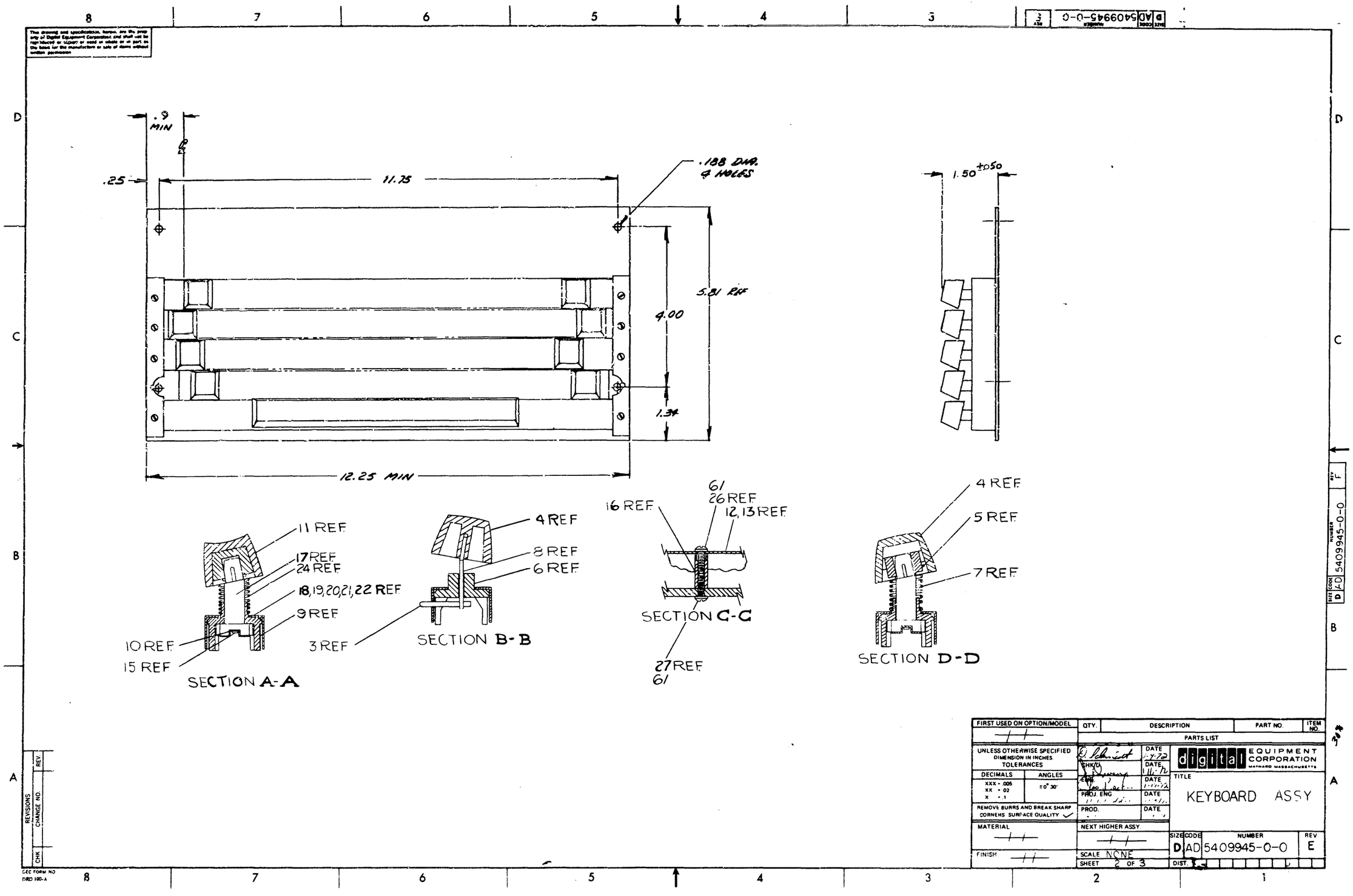

.9 MIN
.25
11.75
.188 DIA. 4 HOLES
5.81 REF
4.00
1.34
12.25 MIN
1.50 ±.050
11 REF
17 REF
24 REF
18,19,20,21,22 REF
9 REF
10 REF
15 REF
SECTION A-A
4 REF
8 REF
6 REF
3 REF
SECTION B-B
16 REF
61
26 REF
12,13 REF
SECTION C-C
27 REF
61
4 REF
5 REF
7 REF
SECTION D-D
FIRST USED ON OPTION/MODEL
QTY.
DESCRIPTION
PART NO.
ITEM NO.
PARTS LIST
UNLESS OTHERWISE SPECIFIED DIMENSION IN INCHES TOLERANCES
DECIMALS
ANGLES
XXX - .005
XX - .02
X - .1
±0° 30'
REMOVE BURRS AND BREAK SHARP CORNERS SURFACE QUALITY
MATERIAL
FINISH
DATE
CHK'D
ENG
PROJ. ENG
PROD.
NEXT HIGHER ASSY.
SCALE NONE
SHEET 2 OF 3
digital EQUIPMENT CORPORATION
MAYNARD MASSACHUSETTS
TITLE
KEYBOARD ASSY
SIZE D
CODE AD
NUMBER 5409945-0-0
REV E
DIST.
REVISIONS
REV.
CHANGE NO.
CHK
DEC FORM NO DRD 100-A

This drawing and specifications, herein, are the property of Digital Equipment Corporation and shall not be reproduced or copied or used in whole or in part as the basis for the manufacture or sale of items without written permission.

NOTES:
1. FORMERLY CONTROL DEVICE DWG. NO. D4459

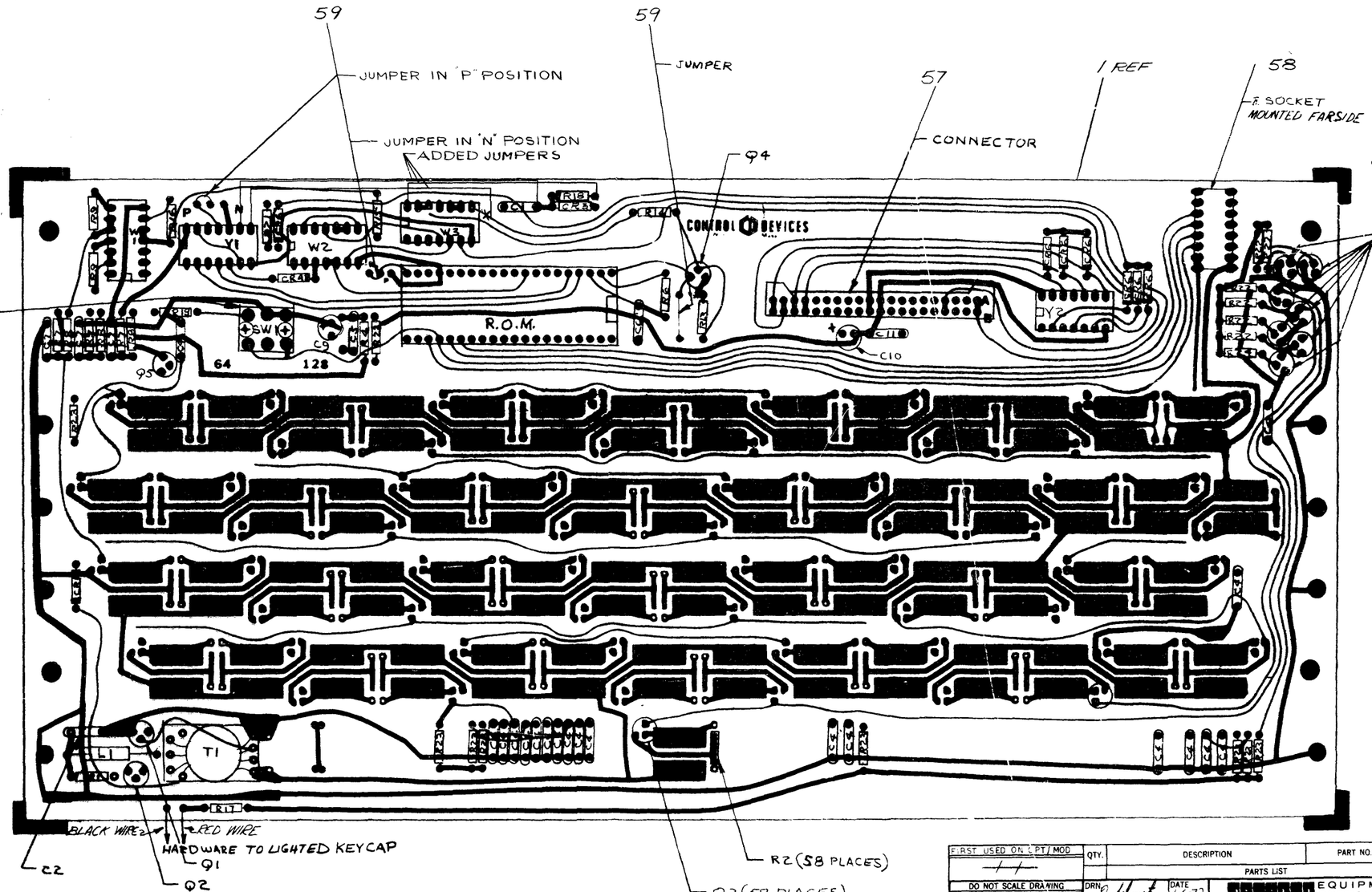

TOLERANCES DECIMAL
.XXX = .005
.XX = .02
.X = .1

FIRST USED ON	QTY.	DESCRIPTION	PART NO.	ITEM NO.
		PARTS LIST		

DO NOT SCALE DRAWING
UNLESS OTHERWISE SPECIFIED DIMENSION IN INCHES
TOLERANCES ANGLES = 0°30'
FINAL SURFACE QUALITY
REMOVE BURRS AND BREAK SHARP CORNERS
MATERIAL
FINISH

DRN.		DATE 1-6-72
CHKD.		DATE 1-14-72
ENG.		DATE 2/14/72
PROJ. ENG.		DATE 2/14/72
PROD.		DATE 2/14/72
NEXT HIGHER ASSY		
SCALE 2/1		
SHEET 3 OF 3		

digital EQUIPMENT CORPORATION

TITLE: KEYBOARD ASSY

CODE	SIZE	NUMBER	REV.
AD	D	D-5409945-0-0	E
DIST. G			

REVISIONS	CHANGE NO	CHK
REV.		

DEC FORM NO. SRD 101

SIZE D NUMBER 5409945-0-0 REV. E

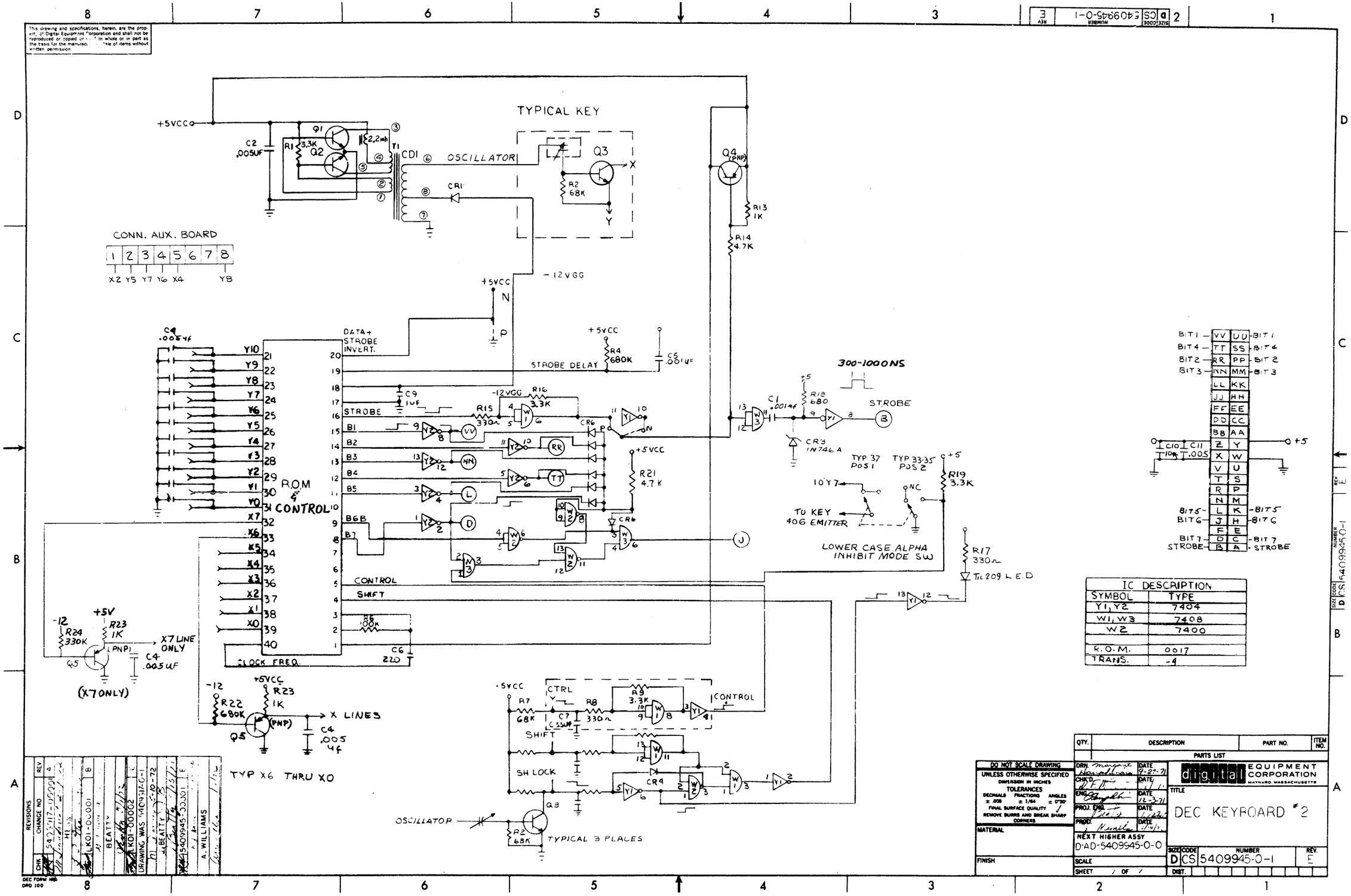

IC DESCRIPTION	
SYMBOL	TYPE
Y1, Y2	7404
W1, W3	7408
W2	7400
R.O.M.	0017
TRANS.	-4

QTY.	DESCRIPTION	PART NO.	ITEM NO.
	PARTS LIST		

DO NOT SCALE DRAWING
UNLESS OTHERWISE SPECIFIED
DIMENSION IN INCHES
TOLERANCES
DECIMALS ± .005 FRACTIONS ± 1/64 ANGLES ± 0°30'
FINAL SURFACE QUALITY
REMOVE BURRS AND BREAK SHARP CORNERS

MATERIAL

FINISH

DRN. Margaret Hanrahan DATE 9-29-71
CHK'D DATE
ENG. DATE 12-3-71
PROJ. ENG. DATE
PROD. DATE

NEXT HIGHER ASSY
D-AD-5409945-0-0

SCALE
SHEET 1 OF 1

digital EQUIPMENT CORPORATION
MAYNARD, MASSACHUSETTS

TITLE
DEC KEYBOARD #2

SIZE D CODE CS NUMBER 5409945-0-1 REV. E

DIST.

REVISIONS

CHK	CHANGE NO	REV
	5409917-00001	A
	LK01-00001	B
	BEATTY	
	LK01-00002	C
	DRAWING WAS 5409917-0-1	
	BEATTY	
	5409945-00001	E
	A. WILLIAMS	

DEC FORM NO. DRO 100

This drawing and specifications, herein, are the property of Digital Equipment Corporation and shall not be reproduced or copied or used in whole or in part as the basis for the manufacture or sale of items without written permission.

NOTES:

1. Q2 IS A CUSTOMER OPTION, AND SHOULD NOT BE INSERTED ON THE PC BOARD.

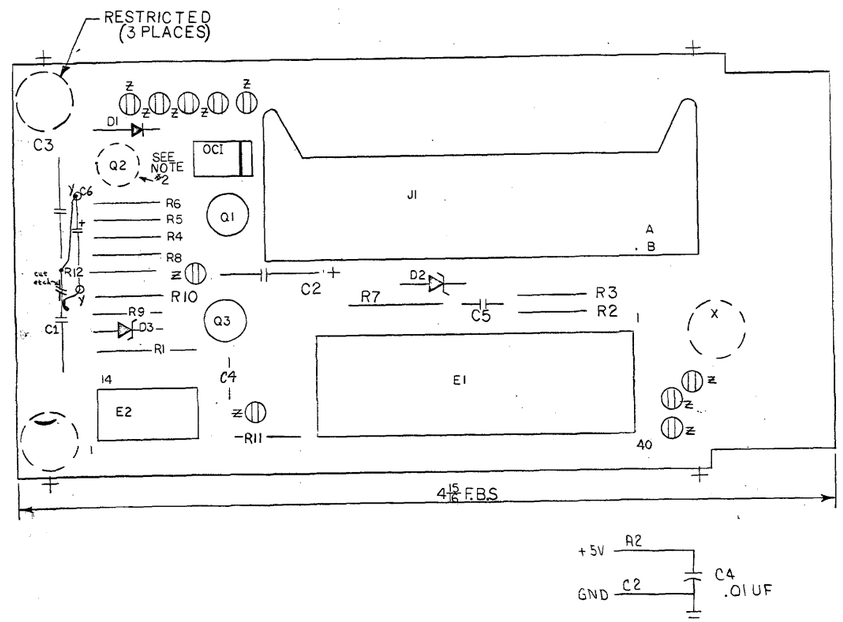

QTY	REF DESIGNATION	DESCRIPTION	PART NO.	ITEM NO.
1	R5	RES 120 1/4W 5%	1300247	29
1	R12	RES. 5.6K 1/4W, 5%	1301874	28
1	E1	IC 1808 UART	1910459	27
1	E2	I.C. DEC 7413	1909989	26
1	OC1	OC TIL 108	1510399	25
2	Q1, Q3	TRANS. DEC. 3009 B	1503100	24
1	R9	RES 820 1/4W 5%	1301775	23
1	R3	RES. 750 1/4W 5%	1301401	22
1	R8	RES. 10 1/4W 5%	1301317	21
1	R6	RES. 100 1/4W 5%	1300229	20
1	R10	RES. 2.7K 1/4W 5%	1300426	19
1	R1	RES. 511 1/8W 1%	1302411	18
2	R2, R4	RES. 330 1/4W 5%	1300295	17
1	R7	RES. 330 1/2W 10%	1300294	16
1	R11	RES. 150 1/4W 5%	1300250	15
1	J1	CONN. 40 PIN BERG	1209941	14
1	D2	DIODE IN758	1103116	13
1	D1	DIODE IN4001	1102942	12
1	D3	DIODE ZENER AZ5	1101938	11
1	C4, C5	CAP. .01μF 100V 20% DISC.	10-01610	10
1	C1	CAP. 3.9μF 10V 10% S. TANT	10-00064	9
3	C2, C3, C6	CAP. 1μF 35V 10% S. TANT	10-01776	8
9		SPLIT LUG	9006735	7
				6
				5
1		ETCHED CIRCUIT BOARD	5010078	4
REF		MODULE ECO HISTORY	B-MH-M7Ø11-Ø-6	3
REF		ASSY/DRILLING HOLE LAYOUT	D-AH-M7Ø11-Ø-5	2
REF		X-Y COORDINATE HOLE LOC	K-CO-M7Ø11-Ø-4	1

PARTS LIST

FIRST USED ON OPTION MODEL: M7Ø11

ETCH BOARD REV: D

IC TYPE	GND	+ 5V
DART	3	1

GND AND 5V ARE USUALLY PIN 7 AND 14 RESPECTIVELY EXCEPTIONS ARE STATED ABOVE

IC PIN LOCATIONS

DEC NO.	EIA NO.	DEC NO.	EIA NO.
		AZ5	
		DEC 3009 B	2N 3646
		IN4001	SAME
		IN758	SAME

SEMICONDUCTOR CONVERSION CHART

REVISIONS: CHANGE NO. / REV / CHK

DRN. A. Campbell DATE 7-28-72
CHK'D. NANCY MOORE DATE 8-1-72
ENG. DATE
PROJ. ENG. DATE
PROD. DATE
NEXT HIGHER ASSY
SCALE NONE
SHEET 1 OF 2

digital EQUIPMENT CORPORATION MAYNARD, MASSACHUSETTS

TITLE: SERIAL TRANSMITTER

SIZE D CODE CS NUMBER M7Ø11-Ø-1 REV. C

DIST.

BRUNING 40-522 166

DEC FORM NO. DRD-135A

This drawing and specifications, herein, are the property of Digital Equipment Corporation and shall not be reproduced or copied or used in whole or in part as the basis for the manufacture or sale of items without written permission.

NOTES:

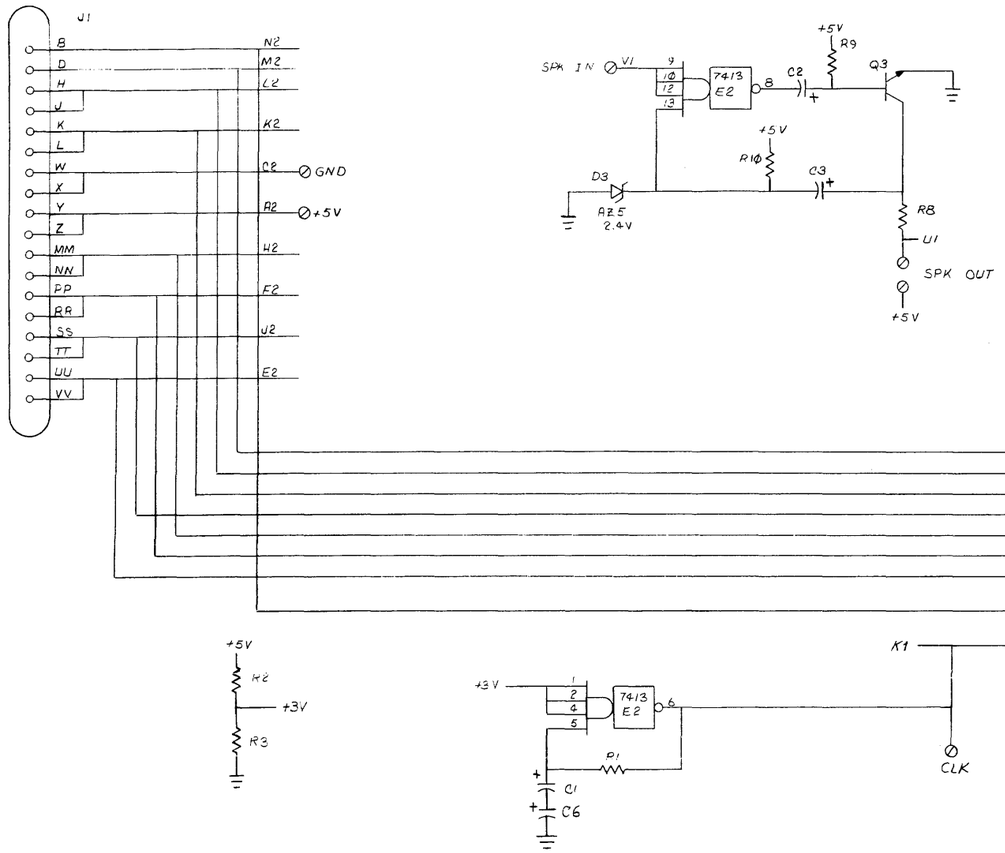

IC TYPE	GND	+ 5V

GND AND 5V ARE USUALLY PIN 7 AND 14 RESPECTIVELY EXCEPTIONS ARE STATED ABOVE

IC PIN LOCATIONS

BRUNING 40-522 16699

DEC FORM NO. DPD:135A

REV	CHANGE NO.	DEC NO.	EIA NO.	DEC NO.	EIA NO.

REVISIONS

CHK

SEMICONDUCTOR CONVERSION CHART

FIRST USED ON OPTION MODEL: M7011

ETCH BOARD REV: D

QTY	REF DESIGNATION	DESCRIPTION	PART NO.	ITEM NO.

PARTS LIST

DRN.	A Campbell	DATE 6-7-72
CHK'D	NANCY MOORE	DATE 6-7-72
ENG.		DATE 9/7/72
PROJ. ENG.		DATE 9/7/72
PROD.		DATE
NEXT HIGHER ASSY		
SCALE		
SHEET	OF	

digital EQUIPMENT CORPORATION MAYNARD, MASSACHUSETTS

TITLE: SERIAL TRANSMITTER

SIZE	CODE	NUMBER	REV.
D	CS	M7011-0-1	C

DIST.

REV C

SIZE D CODE CS NUMBER M7011-0-1

REV C

SIZE D CODE CS NUMBER M7011-0-1

MASTER DRAWING LIST

MAINTENANCE MANUALS NO.	TITLE	UNIT VARIATIONS VR14-Ø	VR14-A	VR14-B	VR14-C	VR14-D	VR14-E	VR14-LC	VR14-LD
VR14	DISPLAY	X	X	X	X	X	X	X	X

USED ON OPTIONS

REVISIONS REV.	DATE	CHG. NO.	APP'D.
M	4/72	00016	A.F.
N	7/72	00019	A.F.
P	10/72	00021	A.F.
R	12/72	00022	D.C.
S	1/73	00023	

DRN. D. CRABBE	DATE 10/70	digital EQUIPMENT CORPORATION MAYNARD, MASSACHUSETTS
CHK'D. D. CRABBE	DATE 10/70	
ENG. D. CRABBE	DATE 11/70	TITLE VR14 DISPLAY
PROJ. ENG. A. FISHMAN	DATE 11/70	
PROD. PETERSON	DATE 11/70	
FIRST USED ON VR14		SIZE A · CODE ML · NUMBER VR14-0 · REV. S
SCALE		DIST.
SHEET 1 OF 2		

DRA 131

Dec 16-(325)-1048-N471

PRINT SET VR14-Ø	DWG. NO.	REV. LET.	NO. OF SHEETS	TITLE	OPTION NO.
X	D-DI-VR14-0-2	J	2	DRAWING INDEX LIST	
X	D-CS-G836-0-1	#	1	POWER SUPPLY & REGULATOR SCHEMATIC	
X	C-CS-7007080-0-1	A	1	POWER SUPPLY HEAT SINK SCHEMATIC	
X	C-CS-7007082-0-1	A	1	DEFLECTION HEAT SINK SCHEMATIC	
X	D-CS-7007084-0-1	D	2	POWER SUPPLY SCHEMATIC	
X	C-MU-VR14-0-3	B	1	MODULE UTILIZATION	
X	D-IC-VR14-0-1	K	3	VR14 BLOCK SCHEMATIC	
X	A-PL-VR14-0-3	B	1	MODULE UTILIZATION (PL)	
X	D-UA-VR14-0-0	J	4	DISPLAY ASSEMBLY	
X	A-PL-VR14-0-0	J	4	DISPLAY ASSEMBLY (PL)	
X	D-AD-7007078-0-0	F	1	WIRED ASSEMBLY	
X	A-PL-7007078-0-0	F	2	WIRED ASSEMBLY (PL)	
X	A-SP-VR14-0-4		4	ENGINEERING SPECIFICATION	
X	A-SP-VR14-0-5	B	31	CHECKOUT & ACCEPTANCE PROCEDURE	
X	D-UA-G836-0-0	#	1	POWER SUPPLY & REGULATOR ASSY	
X	A-PL-G836-0-0	#	3	POWER SUPPLY & REGULATOR ASSY (PL)	
X	D-AD-7007080-0-0		1	POWER SUPPLY HEAT SINK ASSY	
X	A-PL-7007080-0-0		1	POWER SUPPLY HEAT SINK ASSY (PL)	
X	D-AD-7007082-0-0	B	1	DEFLECTION HEAT SINK ASSY	
X	A-PL-7007082-0-0	B	1	DEFLECTION HEAT SINK ASSY (PL)	
X	D-AD-7007084-0-0	F	2	POWER SUPPLY ASSY	
X	A-PL-7007084-0-0	F	3	POWER SUPPLY ASSY (PL)	

TITLE		SIZE	CODE	NUMBER	REV.
VR14 DISPLAY	SHEET 2 OF 2	A	ML	VR14-0	S

DRA 132

DEC 16-(325)-1048-1-N471

This drawing and specifications, herein, are the property of Digital Equipment Corporation and shall not be reproduced or copied or used in whole or in part as the basis for the manufacture or sale of items without written permission. 1972

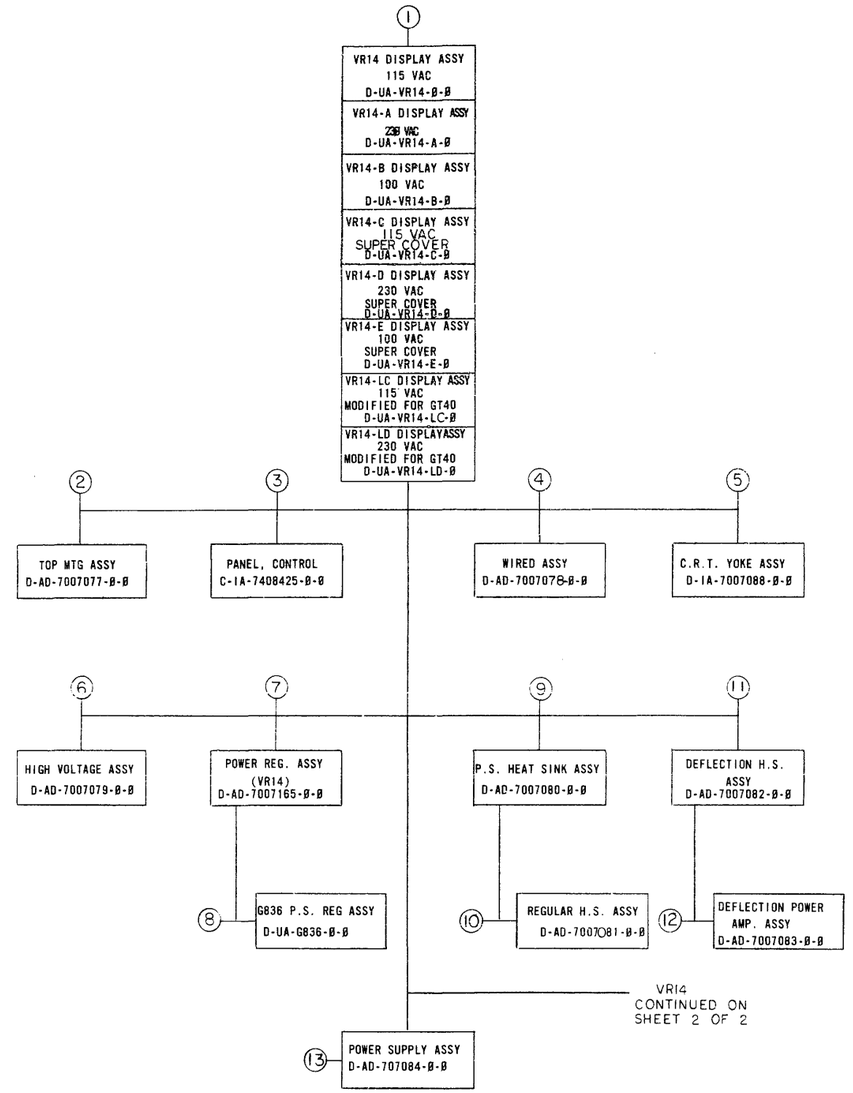

MECHANICAL			DEPT USAGE		
FIND NO.	DESCRIPTION	PART NO.	PROD	CUST	F/C
1.	VR14 DISPLAY ASSY 115 VAC	D-UA-VR14-0-0			
	VR14-A DISPLAY ASSY 230 VAC	D-UA-VR14-A-0			
	VR14-B DISPLAY ASSY 100 VAC	D-UA-VR14-B-0			
	VR14-C DISPLAY 115 VAC S.C.	D-UA-VR14-C-0			
	VR14-D DISPLAY 230 VAC S.C.	D-UA-VR14-D-0			
	VR14-E DISPLAY 100 VAC S.C.	D-UA-VR14-E-0			
	VR14-LC DISPLAY ASSY 115 VAC GT 40	D-UA-VR14-LC-0			
	VR14-LD DISPLAY ASSY 230 VAC GT 40	D-UA-VR14-LD-0			
	VR14 DISPLAY ASSY P.L.	A-PL-VR14-0-0			
	BEZEL (VR12)	E-SC-1209230-0-0			
	BEZEL, CONTROL PANEL (VR12)	E-IA-7406891-0-0			
	CAP, REAR	C-SC-1209229-0-0			
	CAP (VR14)	C-MD-7408434-0-0			
	MASK, C.R.T. (VR14)	D-SC-1209228-0-0			
	MASK C.R.T.	D-MD-7406837-0-0			
	SCREEN, SAFETY	D-SC-1210113-0-0			
	SCREEN, SAFETY (VR14)	D-IA-7408408-0-0			
	PLATE, BOTTOM MTG.	D-IA-7408400-0-0			
	FAN, SCREEN	C-MD-7404881-0-0			
	C.R.T. SHIELD	E-SC-1210104-0-0			
	MAIN CHASSIS CABLE HARNESS	E-IA-7008473-0-0			
	GROUND TUBE	C-IA-7408411-0-0			
	CHASSIS TRACK BRACE	D-MD-7408549-0-0			
	CHANNEL SWITCH	B-IA-7008976-0-0			
	MASK	E-PS-1211106-0-0			
	BRACE, CHASSIS	E-IA-7409964-0-0			
	SHIELD SAFETY	C-IA-7408409-0-0			
	HOLDER, CARD	C-MD-7408414-0-0			
	PKG INST VR14 RACK MOUNT	A-PI-3700026-0-0			
	PKG INST VR14 SUPER COVER	A-PI-3700027-0-0			
	JUMPER	B-IA-7007006-3-0			
2.	TOP MTG. ASSY	D-AD-7007077-0-0			
	TOP MTG. ASSY P.L.	A-PL-7007077-0-0			
	PLATE, TOP MTG.	E-IA-7408401-0-0			
	SCOTCHCALS (VR14)	A-DC-7408407-0-0			
3.	PANEL, CONTROL	C-IA-7408425-0-0			
	PANEL, CONTROL SILK SCREEN	B-SS-7408425-0-1			
4.	WIRED ASSY	D-AD-7007078-0-0			
	WIRED ASSY P.L.	A-PL-7007078-0-0			
	FRAME LOGIC	D-IA-7408422-0-0			
	SAR, MTG	B-MD-7407114-0-0			
	LOGIC FRAME DECALS	A-SS-5308753-0-2			
	LOGIC FRAME DECALS	A-SS-5308753-0-4			
5.	C.R.T. YOKE ASSY	D-IA-7007088-0-0			
6.	HIGH VOLTAGE ASSY	D-AD-7007079-0-0			
	HIGH VOLTAGE ASSY P.L.	A-PL-7007079-0-0			
	PLATE, HIGH VOLTAGE MTG.	D-IA-7408420-0-0			
	SHIELD, HIGH VOL. PROTECTION	B-MD-7408424-0-0			
	SPACER, HEX	B-MD-7408413-0-0			
	HIGH VOLTAGE SHIELD	D-SC-1210169-0-0			
7.	POWER REGULATOR ASSY (VR14)	D-AD-7007165-0-0			
	POWER REG. ASSY (VR14) P.L.	A-PL-7007165-0-0			
	MATE-N-LOK ASSY BRKT	D-IA-7408439-0-0			
	COVER, CAPACITOR	C-MD-7408436-0-0			
8.	G836 POWER REG. ASSY	D-UA-G836-0-0			
	G836 POWER REG. ASSY P.L.	A-PL-G836-0-0			
9.	POWER SUPPLY H.S. ASSY	D-AD-7007080-0-0			
	POWER SUPPLY H.S. ASSY P.L.	A-PL-7007080-0-0			
	SPACER, MTG.	C-MD-7408438-0-0			
	BRKT. MTG. SPACER	C-MD-7408437-0-0			
	POWER SUPPLY HEAT SINK	D-SC-1210131-0-0			
10.	REGULATOR HEAT SINK ASSY	D-AD-7007081-0-0			
	REGULATOR H.S. ASSY P.L.	A-PL-7007081-0-0			
11.	DEFLECTION HEAT SINK ASSY	D-AD-7007082-0-0			
	DEFLECTION H.S. ASSY	A-PL-7007082-0-0			
12.	DEFLECTION POWER AMP. ASSY	D-AD-7007083-0-0			
	DEFLECTION POWER AMP (PL)	A-PL-7007083-0-0			
13.	POWER SUPPLY ASSY	E-AD-7007084-0-0			
	POWER SUPPLY ASSY (PL)	A-PL-7007084-0-0			
	POWER SUP. CABLE HAPN.	E-IA-7007147-0-0			
	COVER, CAPACITOR HOLD DOWN	D-IA-7408433-0-0			
	PLATE, SIDE MTG	E-IA-7408402-0-0			
	COVER, PROTECTION	B-MD-7408416-0-0			

ELECTRICAL			DEPT USAGE		
FIND NO.	DESCRIPTION	PART NO.	PROD	CUST	F/C
1.	VR14 DISPLAY 115 VAC	A-ML-VR14-0			
	VR14-A DISPLAY 230 VAC	A-ML-VR14-A			
	VR14-B DISPLAY 100 VAC	A-ML-VR14-B			
	VR14-C DISPLAY 115 VAC S.C.	A-ML-VR14-C			
	VR14-D DISPLAY 230 VAC S.C.	A-ML-VR14-D			
	VR14-E DISPLAY 100 VAC S.C.	A-ML-VR14-E			
	VR14-LC DISPLAY ASSY 115 VAC GT 40	D-UA-VR14-LC-0			
	VR14-LD DISPLAY ASSY 230 VAC GT 40	D-UA-VR14-LD-0			
	CIRCUIT SCHEMATIC (VR14)	D-IC-VR14-0-1			
	MODULE UTILIZATION	C-MU-VR14-0-3			
	MODULE UTILIZATION (PL)	A-MU-VR14-0-3			
	ENGINEERING SPECIFICATION	A-SP-VR14-0-4			
	CHECK OUT AND ACCEPTANCE PROCEDURE	A-SP-VR14-0-5			
4.	WIRED ASSY	C-AD-7007078-0-0			
	WIRED ASSY P.L.	A-PL-7007078-0-0			
8.	G836 POWER REG. ASSY	D-UA-G836-0-0			
	G836 POWER REG. ASSY P.L.	A-PL-G836-0-0			
	CIRCUIT SCHEMATIC (G836)	D-SC-G836-0-1			
9.	POWER SUPPLY HEAT SINK ASSY	D-AD-7007080-0-0			
	POWER SUPPLY H.S. ASSY PL	A-PL-7007080-0-0			
	CIRCUIT SCHEMATIC (HEAT SINK)	D-CS-7007080-0-1			
11.	DEFLECTION HEAT SINK ASSY	D-AD-7007082-0-0			
	DEFLECTION H.S. ASSY P.L.	A-PL-7007082-0-0			
	CIRCUIT SCHEMATIC(DEFLECTION)	D-CS-7007082-0-1			
13.	POWER SUPPLY ASSY	D-AD-7007084-0-0			
	POWER SUPPLY ASSY P.L.	A-PL-7007084-0-0			
	CIRCUIT SCHEMATIC (POWER SUPPLY)	D-CS-7007084-0-1			

REVISIONS			
CHK	CHANGE NO	REV.	
RM	VR14-00019	F	A. FISHMAN 10-27-72
	REVISED & REDRAWN		C. Talmadge 10-27-72
RM	VR14-00021	H	A. FISHMAN 11-9-72
RM	VR14-00023	J	A. FISHMAN 11-2-72
			D. K. CRABBE 2-6-73

FIRST USED ON OPTION/MODEL: VR14

DRN. D.K.CRABBE	DATE	11-3-70
CHK'D. D.K.CRABBE	DATE	11-4-70
ENG. D.K.CRABBE	DATE	11-6-70
PROJ. ENG. A.FISHMAN	DATE	11-6-70
PROD. R.PETERSON	DATE	12-8-70
NEXT HIGHER ASSY: D-UA-VR14-0-0		
SCALE: —		
SHEET 1 OF 2		

digital EQUIPMENT CORPORATION MAYNARD, MASSACHUSETTS

TITLE: DRAWING INDEX LIST

SIZE D | CODE DI | NUMBER VR14-0-2 | REV. J | DIST. —

DEC FORM NO DRD 138

This drawing and specifications, herein, are the property of Digital Equipment Corporation and shall not be reproduced or copied or used in whole or in part as the basis for the manufacture or sale of items without written permission. 1972

(1)

VR14 DISPLAY ASSY
115 VAC
D-UA-VR14-Ø-Ø

VR14-A DISPLAY ASSY
23Ø VAC
D-UA-VR14-A-Ø

VR14-B DISPLAY ASSY
1ØØ VAC
D-UA-VR14-B-Ø

VR14-C DISPLAY ASSY
115 VAC
SUPER COVER
D-UA-VR14-C-Ø

VR14-D DISPLAY ASSY
23Ø VAC
SUPER COVER
D-UA-VR14-D-Ø

VR14-E DISPLAY ASSY
1ØØ VAC
SUPER COVER
D-UA-VR14-E-Ø

VR14-LC DISPLAY ASSY
115 VAC
MODIFIED FOR GT 40
D-UA-VR14-LC-Ø

VR14-LD DISPLAY ASSY
23Ø VAC
MODIFIED FOR GT40
D-UA-VR14-LD-Ø

(14) * LIGHT PEN ASSY
C-UA-375-Ø-Ø
B-DD-375-Ø.

(17) PANEL FRONT
LIGHT PEN
C-IA-7409977-Ø-Ø
(FOR GT4Ø USE)

(18) PANEL FRONT
LIGHT PEN
C-IA-7409974-Ø-Ø
(FOR PDP 12 USE)

(19) SUPER COVER
ASS'Y
C-AD7009027-Ø-Ø

(15) LIGHT PEN 375-A
C-UA-375-A-Ø
B-DD-375-A

(16) PANEL FRONT
LIGHT PEN
C-IA-7409068-Ø-Ø

* OPTIONAL

MECHANICAL			DEPT USAGE		
FIND NO.	DESCRIPTION	PART NO.	PROD	CUST	F/C
14.	LIGHT PEN ASSY	C-UA-375-Ø-Ø			
	PHONE JACK CABLE	D-IA-7008433-Ø-Ø			
15.	LIGHT PEN ASSY (375-A)	C-UA-375-A-Ø-			
	INFRA-RED LIGHT PEN	5410268			
16.	PANEL, FRONT LIGHT PEN	C-IA-7409068-Ø-Ø			
	SILK SCREEN	B-SS-7409068-Ø-1			
17.	PANEL FRONT LIGHT PEN	C-IA-7409977-Ø-Ø			
	SILK SCREEN	B-SS-7409977-Ø-1			
18.	PANEL FRONT LIGHT PEN	C-IA-7409974-Ø-Ø			
	SILK SCREEN	B-SS-7409974-Ø-1			
19.	SUPER COVER ASSY	D-AD-7009027-Ø-Ø			
	SHIM, CHASSIS (R.H.)	C-MD-7409968-0-0			
	SHIM, CHASSIS (L.H.)	C-MB-7409969-0-0			
	COVER PANEL REAR TOP	D-MD-7409965-0-0			
	EXTRUSION ASSY LOWER	D-IA-7409972-0-0			
	COVER TOP	E-IA-7409963-0-0			

ELECTRICAL			DEPT USAGE		
FIND NO.	DESCRIPTION	PART NO.	PROD	CUST	F/C

REV. J NUMBER DI VR14-Ø-2 SIZE D CODE 3ØCØ

REVISIONS	REV	CHANGE NO	CHK

FIRST USED ON OPTION/MODEL VR14

DRN. E K CRABBE	DATE 11-3-70	digital EQUIPMENT CORPORATION MAYNARD MASSACHUSETTS
CHK'D. E K CRABBE	DATE 11-4-70	
ENG. E K CRABBE	DATE 11-5-70	TITLE: DRAWING INDEX LIST
PROJ. ENG. A FISHMAN	DATE 11-8-70	
PROD. R PETERSON	DATE 12-8-70	
NEXT HIGHER ASSY D-UA-VR14-Ø-Ø		SIZE D CODE DDI NUMBER VR14-0-2 REV. J
SCALE —		DIST.
SHEET 2 OF 2		

DEC FORM 102 END 100

THIS SCHEMATIC IS FURNISHED ONLY FOR TEST AND MAINTENANCE PURPOSES. THE CIRCUITS ARE PROPRIETARY IN NATURE AND SHOULD BE TREATED ACCORDINGLY
COPYRIGHT 1970 BY DIGITAL EQUIPMENT CORPORATION

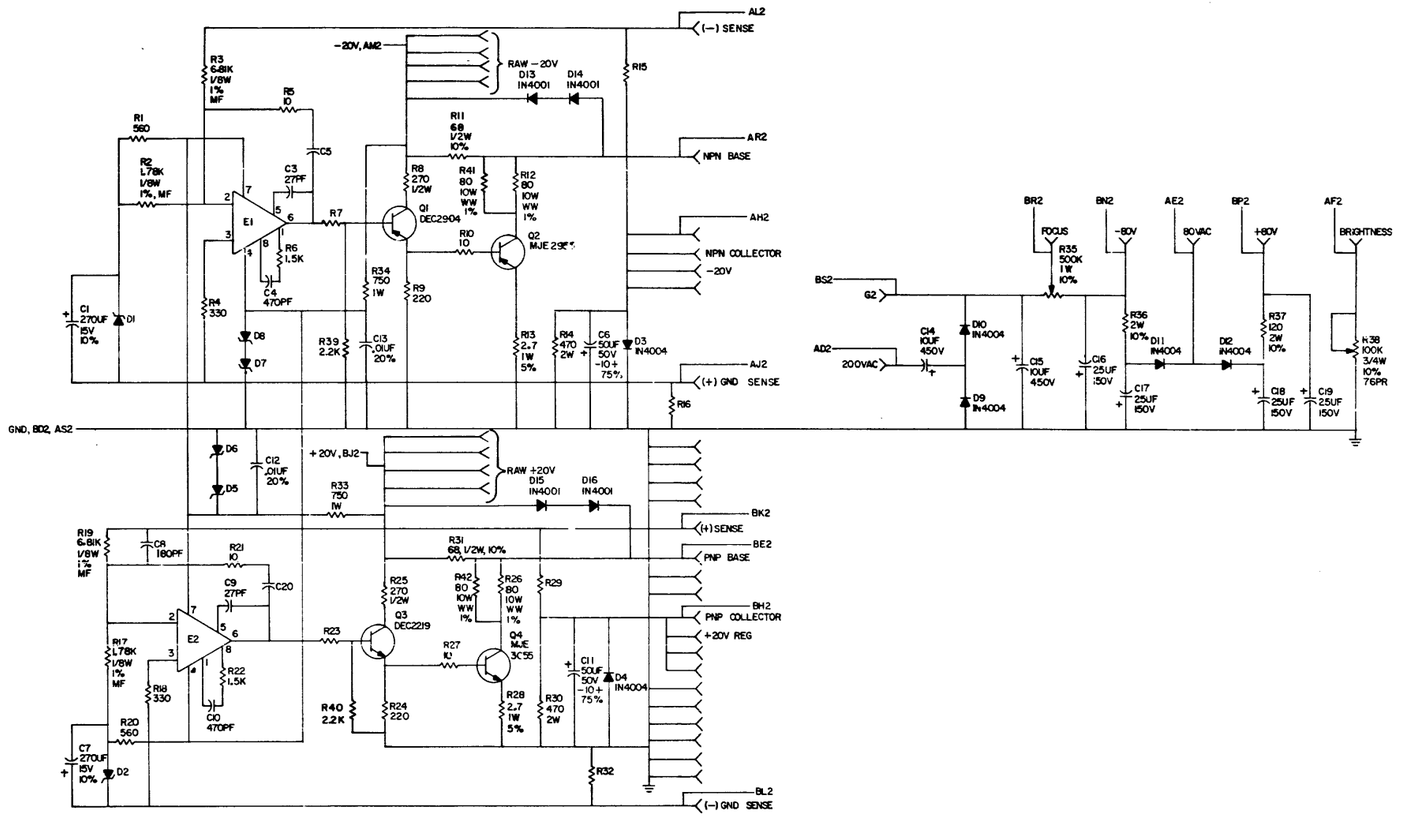

UNLESS OTHERWISE INDICATED:
RESISTORS ARE 1K, 1/4W, 5%
DIODES ARE IN752A, 5.6V
CAPACITORS ARE 1000PF, 100V, 5%
E1, E2 ARE DEC709C

>—• EYELETS

REVISIONS			
CHG NO	ECO NO	REV	
1	00002	B	
2	00003	C	
3	00004	D	

DRW Mary Moore 11/23/70
CHK'D
ENG
PROD

TRANSISTOR & DIODE CONVERSION CHART

DEC	EIA		EIA
IN752A	5.6	MC3455	
2N2219	2N2219		
2N2904	2N2904		
709C	24-32		
MJE3055	2N3055		

DIGITAL EQUIPMENT CORPORATION MAYNARD MASSACHUSETTS

TITLE VR-14 POWER SUPPLY AND REGULATOR BD G836

SIZE	CODE	NUMBER	REV
D	CS	G836-0-1	E

PRINTED CIRCUIT REV D

DEC FORM NO. 1000 116

This drawing and specifications, herein, are the property of Digital Equipment Corporation and shall not be reproduced or copied or used in whole or in part as the basis for the manufacture or sale of items without written permission.

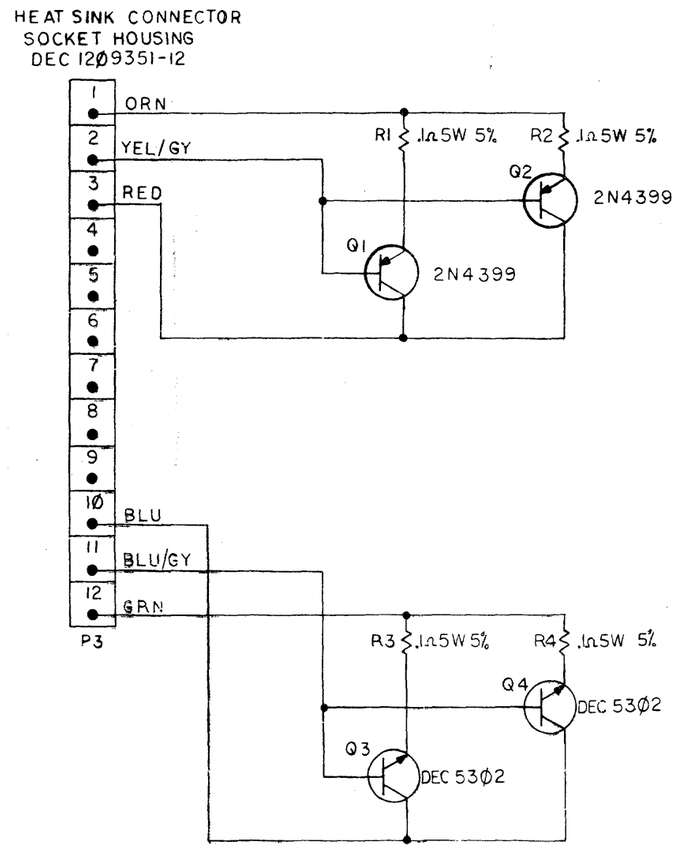

REF DESIGNATION	DESCRIPTION	PART NO.
P3	AMP 12 CIRCUIT	12Ø9351-12
Q1 Q2	TRANSISTOR 2N4399	151Ø362
Q3, Q4.	TRANSISTOR DEC 53Ø2	151Ø196
R1 - R4.	RESISTOR .1Ω 5W 5%	13Ø5872

PARTS LIST

FIRST USED ON OPTION MODEL: VR14

UNLESS OTHERWISE SPECIFIED
DIMENSION IN INCHES
TOLERANCES
DECIMALS ±.005 FRACTIONS ±1/64 ANGLES ± 0°30'
FINAL SURFACE QUALITY ✓
REMOVE BURRS AND BREAK SHARP CORNERS

MATERIAL —//—

FINISH —//—

TRANSISTOR & DIODE CONVERSION CHART

DEC	EIA	DEC	EIA
DEC 53Ø2	2N 53Ø2		
DEC 379Ø	2N 379Ø		

		DATE
DRN.	G. Marcum	7/24/70
CHK'D.	W.K. Gobbe	10/6/70
ENG.	W.K. Gobbe	11/6/70
PROJ. ENG.	C.F. Johnson	11-7-70
PROD.	K. Peterson	11/6/70

NEXT HIGHER ASSY: D-AL-7007080-0-0

SCALE —//—

SHEET 1 OF 1

digital EQUIPMENT CORPORATION
MAYNARD, MASSACHUSETTS

TITLE: CIRCUIT SCHEMATIC (HEAT SINK)

SIZE	CODE	NUMBER	REV.
C	CS	7007080-0-1	A

DIST.

REVISIONS

CHK	CHANGE NO.	REV.
KK	VR14-00005	A

A. FISHMAN 4/14/71

DEC FORM NO. DRC 100

This drawing and specifications, herein, are the property of Digital Equipment Corporation and shall not be reproduced or copied or used in whole or in part as the basis for the manufacture or sale of items without written permission.

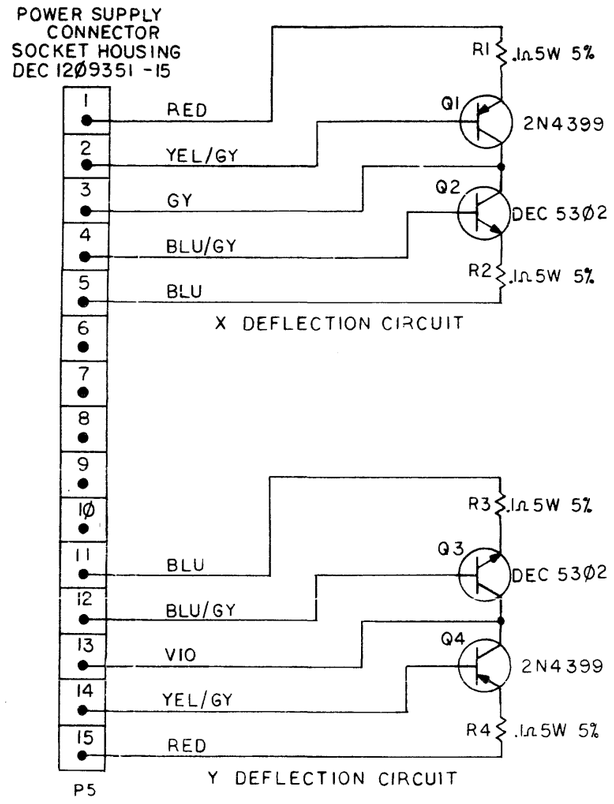

REF DESIGNATION	DESCRIPTION	PART NO.
Q2, Q3.	TRANSITOR DEC 53Ø2	151Ø196
P5	AMP 15-CIRCUIT	12Ø9351-15
Q1, Q4.	TRANSISTOR 2N4399	1510362
R1-R4	RESISTOR .1Ω 5W 5%	13Ø5872

PARTS LIST

FIRST USED ON OPTION/MODEL
VR14

UNLESS OTHERWISE SPECIFIED
UNLESS OTHERWISE SPECIFIED
DIMENSION IN INCHES
TOLERANCES
DECIMALS ± .005 FRACTIONS ± 1/64 ANGLES ± 0°30'
FINAL SURFACE QUALITY ✓
REMOVE BURRS AND BREAK SHARP CORNERS

MATERIAL —//—

FINISH —//—

		DATE
DRN.	G. Morin	9/24/70
CHK'D.	D.K. Gobbe	10/16/70
ENG.	D.K. Gobbe	11/6/70
PROJ. ENG.	C. Fishman	11-6-70
PROD.	R. Peterson	11/6/70

NEXT HIGHER ASSY
D-AD-7007082-0-0

SCALE —//—
SHEET 1 OF 1

digital EQUIPMENT CORPORATION
MAYNARD, MASSACHUSETTS

TITLE
CIRCUIT SCHEMATIC
(DEFLECTION)

SIZE	CODE	NUMBER	REV.
C	CS	7007082-0-1	A

DIST.

TRANSISTOR & DIODE CONVERSION CHART

DEC	EIA	DEC	EIA
DEC 379Ø	2N 379Ø		
DEC 53Ø2	2N 53Ø2		

REVISIONS

CHK	CHANGE NO.	REV.
[illegible]	VR14-00005	A

A. FISHMAN 4/14/71
C. Fishman 4-20-71

DEC FORM NO.
DEC 160

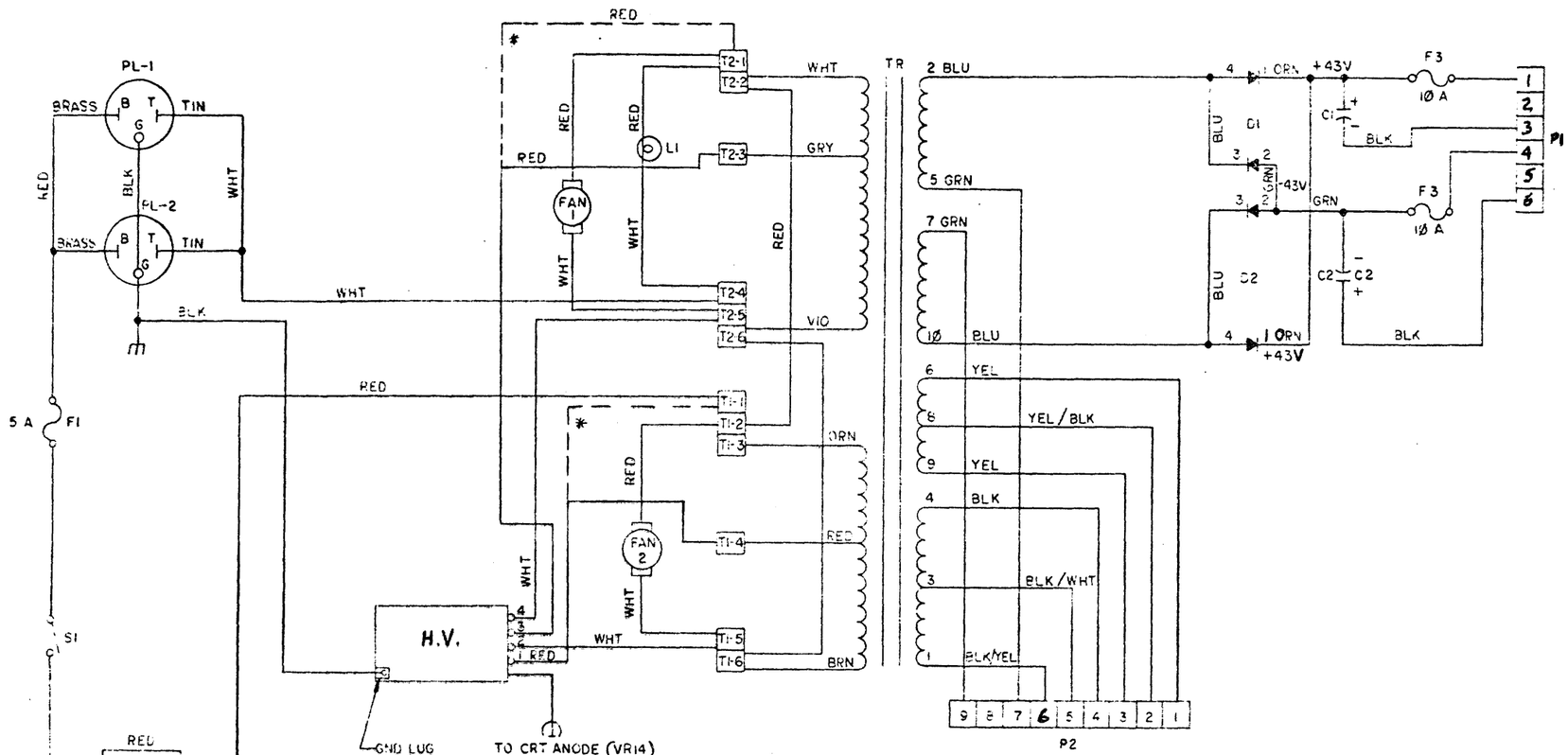

115 VAC

* FOR VR20 OPERATION:
DELETE T1-4, ADD TO T1-1
DELETE T2-3, ADD TO T2-1

QTY	DESCRIPTION	PART NO.	ITEM NO.
	PWR SUP PARTS LIST	A-PL-7007084-0-0	15
F3	FUSE 10 AMP	9006836	14
F2	FUSE 3 AMP	9007218	13
F1	FUSE 5 AMP	9007222	12
TP	TRANSFORMER	1610160-0	11
J7,J8	MATE-N-LOCK 3 PIN	1209352-3	10
P2	MATE-N-LOCK 9 PIN	1209351-9	9
P1	MATE-N-LOCK 6 PIN	1209351-6	8
C1,C2	CAP. 5000 uF AT 75 V	1010143-0	7
PL2	RECEP AC MALE 160-5 AMPH (115V)	1201252	6
PL1	RECEP AC FEM 160-4 AMPH (115V)	1201251	5
R1	SWITCH ± POT 100K 1/2 W	1310383	4
LI	LIGHT, PILOT 115 VAC	1209348	3
D1,D2	RECTIFIER, DM-15	1105799	2
TS	JONES STRIP	9006904	1

VR14-100C7	A. FISHMAN	5-30-72	
VR14-100D10	A. FISHMAN	5-30-72	
VR14-100D15	A. FISHMAN	5-30-72	
VR14-100D15	L. SALE	5-31-72	

USED ON OPTION/MODEL: VR14

TRANSISTOR & DIODE CONVERSION CHART

NEXT HIGHER ASSY: D AD-7007084-0-0

EQUIPMENT CORPORATION

TITLE: CIRCUIT SCHEMATIC (PWR. SUP.)

NUMBER: D SI7007084-0-1 REV C

1 OF 2

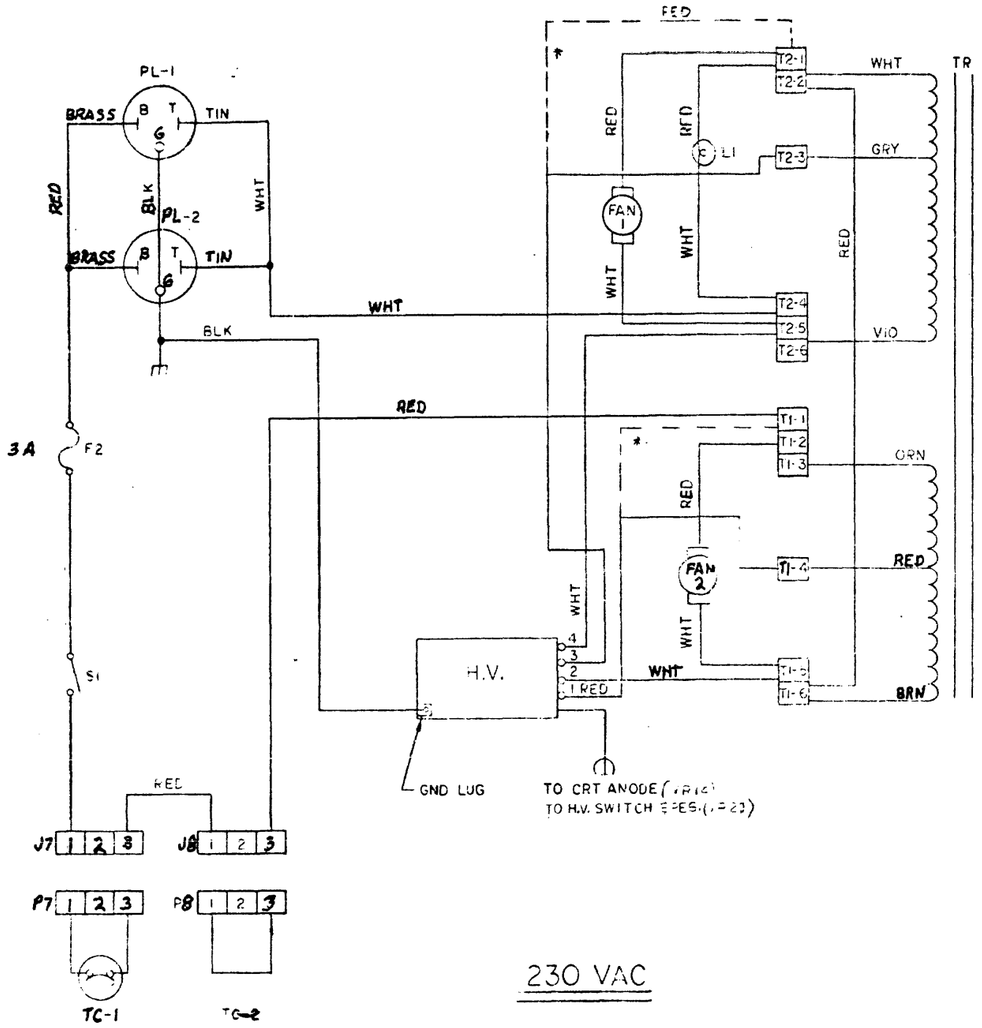

230 VAC

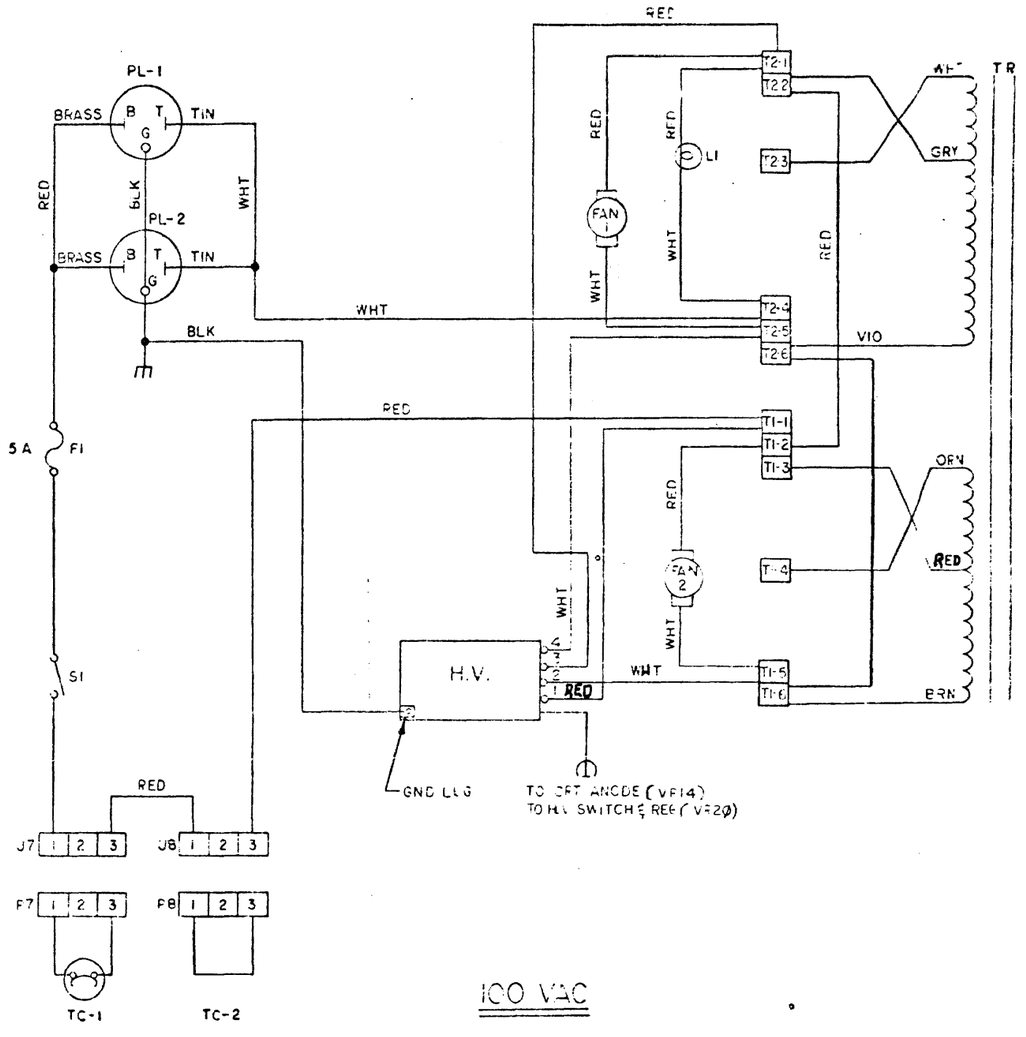

100 VAC

QTY	DESCRIPTION	PART NO	ITEM NO

FIRST USED ON OPTION/MODEL: VR14

UNLESS OTHERWISE SPECIFIED
DIMENSION IN INCHES
TOLERANCES
DECIMALS ± .005 FRACTIONS ± 1/64 ANGLES ± 0°30'
FINISH QUALITY
REMOVE BURRS AND BREAK SHARP

MATERIAL

FINISH

TRANSISTOR & DIODE CONVERSION CHART

NEXT HIGHER ASSY: DES700784-0-1

DATE

EQUIPMENT CORPORATION

TITLE: CIRCUIT SCHEMATIC (PWR. SUP.)

NUMBER: DES700784-0-1

REV: D

SHEET 2 OF 2

REV	DESCRIPTION	DATE	APPROVED
D	ECO 5700	4-1-70	
C	ECO 5700	3-1-70	
B	ECO 5700	2-1-70	
A	ECO 5700	1-1-70	

This drawing and specifications, herein, are the property of Digital Equipment Corporation and shall not be reproduced or copied or used in whole or in part as the basis for the manufacture or sale of items without written permission. 1973

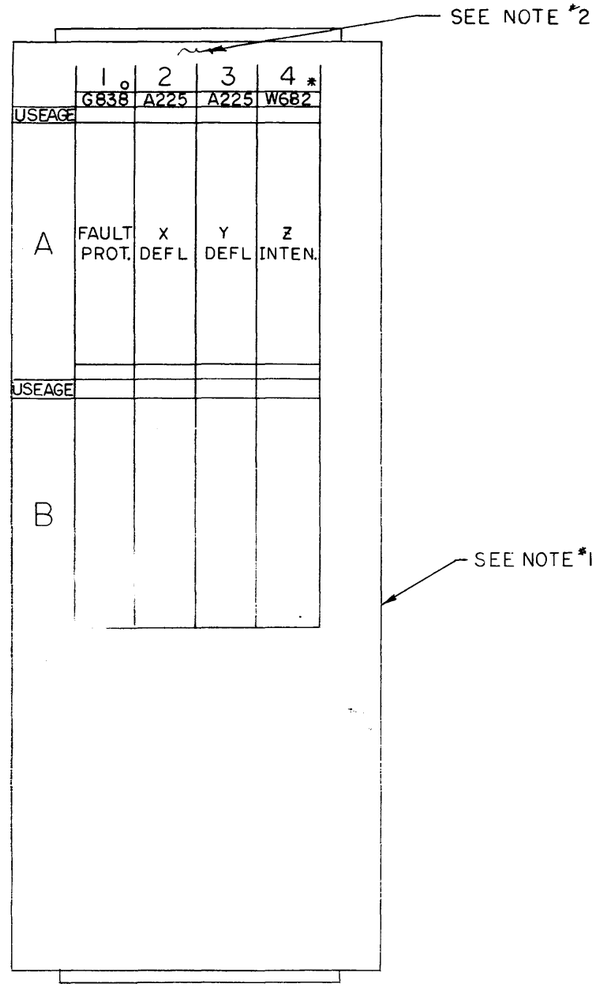

o G840 LIGHT PEN OPTION
* W684 8 LEVEL INTENSITY OPTION
(STANDARD ON VR14 LC, LD)

NOTES:

1. MODULE INFORMATION SHOWN FROM WIRING SIDE.
2. A225' ARE REPLACED WITH A225-YB'S ON VR14-LC AND LD

FIRST USED ON OPTION/MOD	QTY.	DESCRIPTION	PART NO.	ITEM NO.
VR14		PARTS LIST		

UNLESS OTHERWISE SPECIFIED
UNLESS OTHERWISE SPECIFIED
DIMENSION IN INCHES
TOLERANCES
DECIMALS ± .005 FRACTIONS ± 1/64 ANGLES ± 0°30'
FINAL SURFACE QUALITY ✓
REMOVE BURRS AND BREAK SHARP CORNERS

MATERIAL —/—/—
FINISH —/—/—

		DATE
DRN.	D.K. Gabbe	9/28/70
CHK'D.	D.K. Gabbe	9/29/70
ENG.	D.K. Gabbe	11/6/70
PROJ. ENG.	A. Fishman	11-6-70
PROD.	R. Peterson	11/6/70

NEXT HIGHER ASSY C-MU-VR14-Ø-3
SCALE —/—/—
SHEET 1 OF 1

digital EQUIPMENT CORPORATION
MAYNARD, MASSACHUSETTS

TITLE
MODULE UTILIZATION (VR14)

SIZE	CODE	NUMBER	REV.
C	MU	VR14-Ø-3	B

DIST.

REVISIONS

CHK	CHANGE NO.	REV.
[illegible]	VR14-00019	A
[illegible]	[illegible] 8-11-72	
	A. FISHMAN	
[illegible]	VR14-00022	B
	[illegible] 1-3-73	
	A. FISHMAN	
[illegible]	[illegible] 1-16-73	

DEC FORM NO. DRC 169

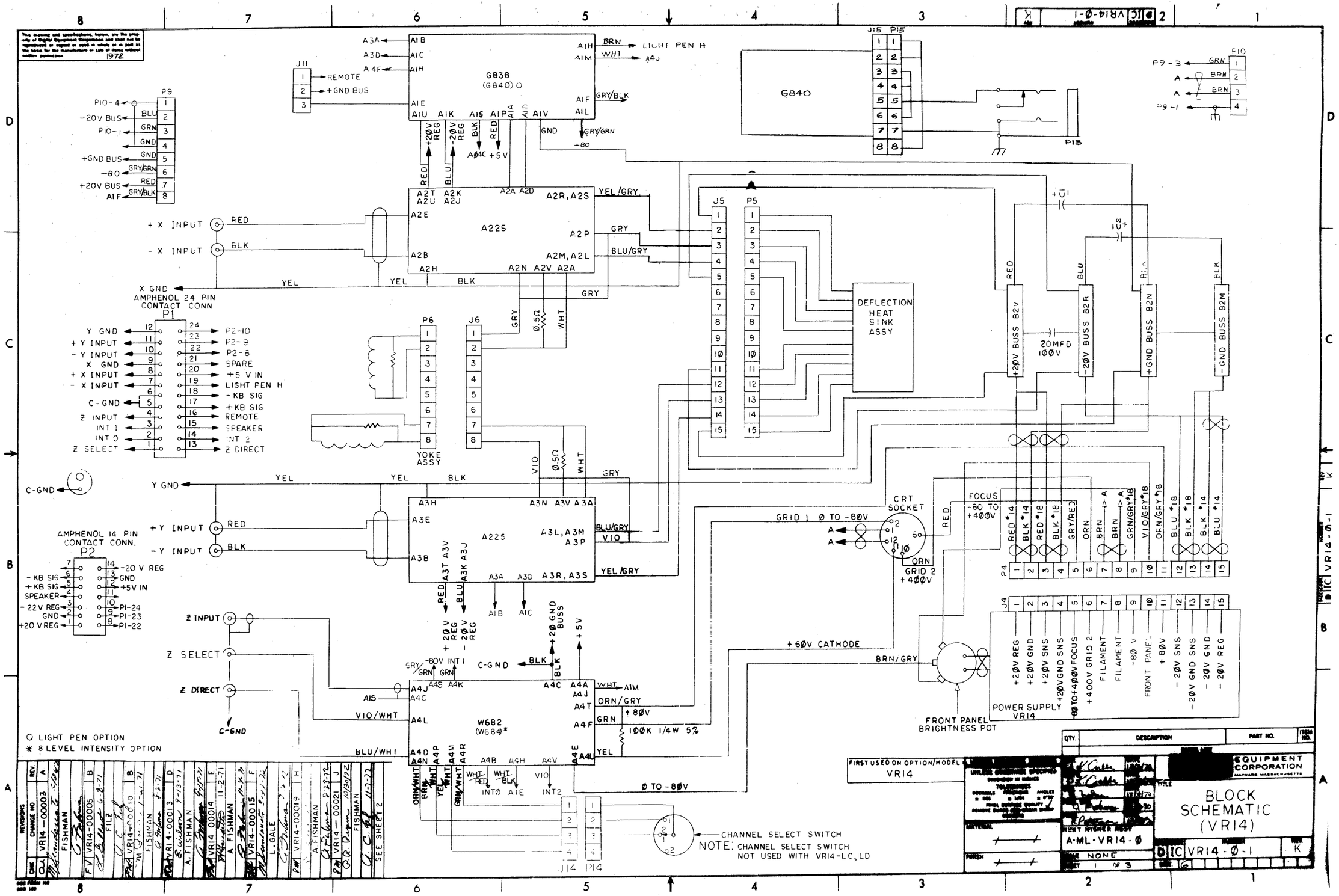

G838
(G840)
G840
A225
W682
(W684)*
DEFLECTION HEAT SINK ASSY
YOKE ASSY
AMPHENOL 24 PIN CONTACT CONN
AMPHENOL 14 PIN CONTACT CONN.
CRT SOCKET
POWER SUPPLY VR14
FRONT PANEL BRIGHTNESS POT
CHANNEL SELECT SWITCH
NOTE: CHANNEL SELECT SWITCH NOT USED WITH VR14-LC, LD
O LIGHT PEN OPTION
* 8 LEVEL INTENSITY OPTION
FIRST USED ON OPTION/MODEL VR14
EQUIPMENT CORPORATION
BLOCK SCHEMATIC (VR14)
A-ML-VR14-Ø
VR14-Ø-1

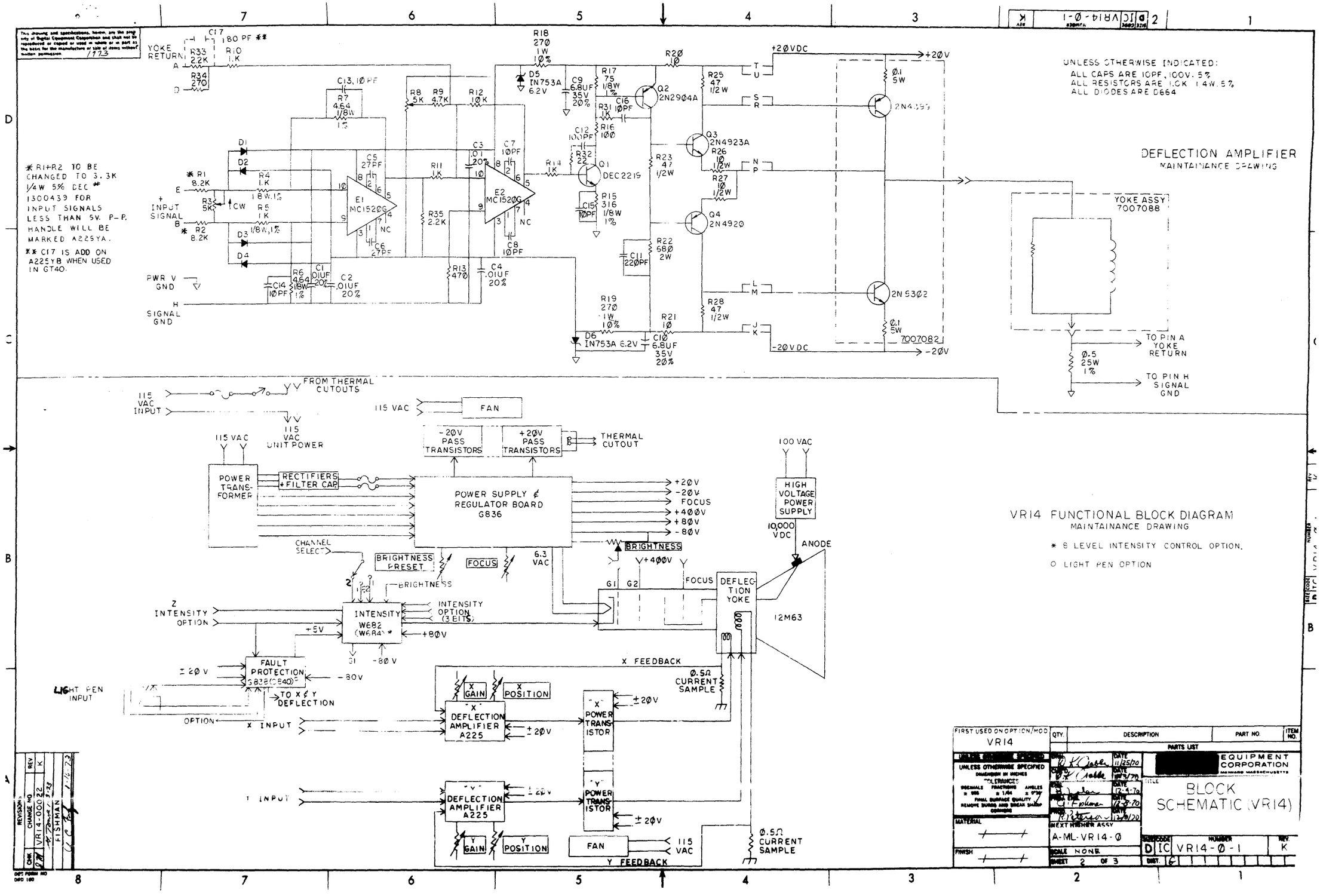

DEFLECTION AMPLIFIER
MAINTAINANCE DRAWING
UNLESS OTHERWISE INDICATED:
ALL CAPS ARE 10PF, 100V, 5%
ALL RESISTORS ARE 1.0K 1.4W, 5%
ALL DIODES ARE D664
* R1+R2 TO BE CHANGED TO 3.3K 1/4W 5% DEC # 1300439 FOR INPUT SIGNALS LESS THAN 5V. P-P. HANDLE WILL BE MARKED A225YA.
** C17 IS ADD ON A225YB WHEN USED IN GT40.
YOKE RETURN
INPUT SIGNAL
PWR V GND
SIGNAL GND
E1 MC1520G
E2 MC1520G
Q1 DEC2219
Q2 2N2904A
Q3 2N4923A
Q4 2N4920
2N4399
2N5302
+20VDC
-20VDC
+20V
-20V
YOKE ASSY 7007088
TO PIN A YOKE RETURN
TO PIN H SIGNAL GND
VR14 FUNCTIONAL BLOCK DIAGRAM
MAINTAINANCE DRAWING
* 8 LEVEL INTENSITY CONTROL OPTION.
O LIGHT PEN OPTION
115 VAC INPUT
FROM THERMAL CUTOUTS
115 VAC UNIT POWER
FAN
-20V PASS TRANSISTORS
+20V PASS TRANSISTORS
THERMAL CUTOUT
POWER TRANSFORMER
RECTIFIERS + FILTER CAP
POWER SUPPLY & REGULATOR BOARD G836
+20V
-20V
FOCUS
+400V
+80V
-80V
100 VAC
HIGH VOLTAGE POWER SUPPLY
10,000 VDC
ANODE
CHANNEL SELECT
BRIGHTNESS PRESET
FOCUS
6.3 VAC
BRIGHTNESS
DEFLECTION YOKE
12M63
Z INTENSITY OPTION
INTENSITY W682 (W684) *
INTENSITY OPTION (3 BITS)
FAULT PROTECTION G838(G840)
LIGHT PEN INPUT
TO X & Y DEFLECTION
OPTION
X INPUT
Y INPUT
X FEEDBACK
Y FEEDBACK
X GAIN
X POSITION
Y GAIN
Y POSITION
"X" DEFLECTION AMPLIFIER A225
"Y" DEFLECTION AMPLIFIER A225
"X" POWER TRANSISTOR
"Y" POWER TRANSISTOR
0.5Ω CURRENT SAMPLE
FIRST USED ON OPTION/MOD VR14
QTY. DESCRIPTION PART NO. ITEM NO.
PARTS LIST
UNLESS OTHERWISE SPECIFIED
EQUIPMENT CORPORATION
MAYNARD MASSACHUSETTS
BLOCK SCHEMATIC (VR14)
NEXT HIGHER ASSY A-ML-VR14-0
SCALE NONE
SHEET 2 OF 3
D IC VR14-0-1 K
REVISIONS
CHANGE NO VR14-00022
FISHMAN

This drawing and specification, both the property of Digital Equipment Corporation, and shall not be reproduced or copied or used in whole or in part as the basis for the manufacture or sale of items without written permission. 1972

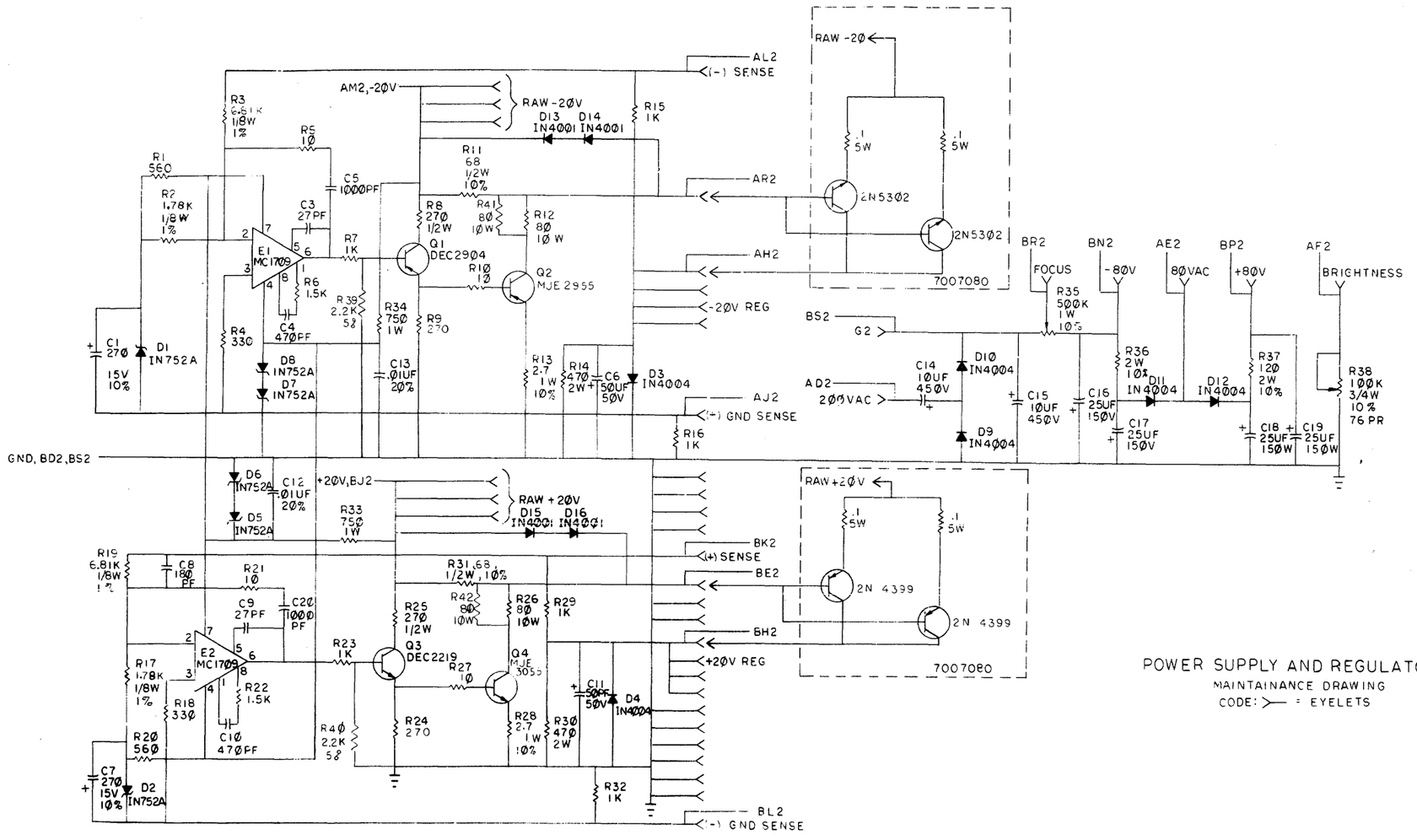

POWER SUPPLY AND REGULATOR

MAINTAINANCE DRAWING

CODE: >— = EYELETS

REVISIONS	REV	CHANGE NO	DWR

FIRST USED ON OPTION/MOD:	QTY.	DESCRIPTION	PART NO.	ITEM NO.
VR14				

UNLESS OTHERWISE SPECIFIED
DIMENSIONS IN INCHES
TOLERANCES
DECIMALS ± FRACTIONS ± ANGLES ±
FINISH, MATERIAL, EDGE BREAK SHARP REMOVE BURRS AND BREAK SHARP CORNERS

MATERIAL —

FINISH —

		DATE
DRAWN	[redacted]	12/11/70
CHECKED	[illegible]	12/15/70
ENGR	[illegible]	12-15-70
MFG	[illegible]	12-15-70
QA	[illegible]	12/18/70

NEXT HIGHER ASSY: A-ML-VR14-0

NONE

SHEET 3 OF 3

[redacted] EQUIPMENT CORPORATION
MAYNARD MASSACHUSETTS

TITLE: BLOCK SCHEMATIC (VR14)

SIZE	CODE	NUMBER	REV.
D	IC	VR14-0-1	K

SCALE: NONE

SHEET 3

MATERIAL NUMBER: VR14-0-1 REV K

DIGITAL EQUIPMENT CORPORATION
MAYNARD, MASSACHUSETTS

PARTS LIST

MADE BY D.K. Crabbe	CHECKED D.K. Crabbe	SECTION
DATE 9/28/70	DATE 10/8/70	1
ENG D.K. Crabbe	PROD R Peterson	ISSUED SECT.
DATE 11/6/70	DATE 11/6/70	1

ITEM NO.	DWG NO./PART NO.	DESCRIPTION	QUANTITY/VARIATION											
			VR14-Ø	VR14-A	VR14-B	VR14-C	VR14-D	VR14-E	VR14-LC	VR14-LD				
	A225	Deflection Amplifier	2	2	2	2	2	2						
	W682	Intensity Amplifier	1	1	1	1	1	1	-	-				
	G838	Fault Protection	1	1	1	1	1	1	-	-				
	G840	LIGHT PEN	A/R	A/R	A/R	A/R	A/R	A/R	A/R	A/R				
	W684	8 LEVEL INTENSITY	A/R	A/R	A/R	A/R	A/R	A/R	1	1				
	A225-YB	DEFLECTION AMPLIFIER	-	-	-	-	-	-	2	2				

TITLE	ASSY NO.	SIZE	CODE	NUMBER	REV.	ECO NO.
MODULE UTILIZATION LIST	A-MU-VR14-Ø-3	A	PL	VR14-Ø-3	B	VR14-00022
	SHEET 1 OF 1	DIST.				

DEC FORM NO.16 1031
DRA 110

This drawing and specifications, herein, are the property of Digital Equipment Corporation and shall not be reproduced or copied or used in whole or in part as the basis for the manufacture or sale of items without written permission. 1972

LEGEND

NO.	VARIATION
VR14-Ø	115 VAC 5Ø/6Ø HZ
VR14-A	23Ø VAC 5Ø/6Ø HZ
VR14-B	1ØØ VAC 5Ø/6Ø HZ
VR14-C	115 VAC 5Ø/6Ø HZ SUPER COVER
VR14-D	23Ø VAC 5Ø/6Ø HZ SUPER COVER
VR14-E	1ØØ VAC 5Ø/6Ø HZ SUPER COVER
VR14-LC	115 VAC 50/60 HZ MODIFIED FOR GT 40
VR14-LD	230 VAC 50/60 HZ MODIFIED FOR GT 40

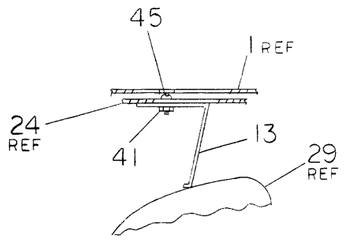

SECTION "A-A"

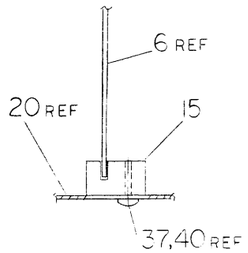

SECTION "B-B"

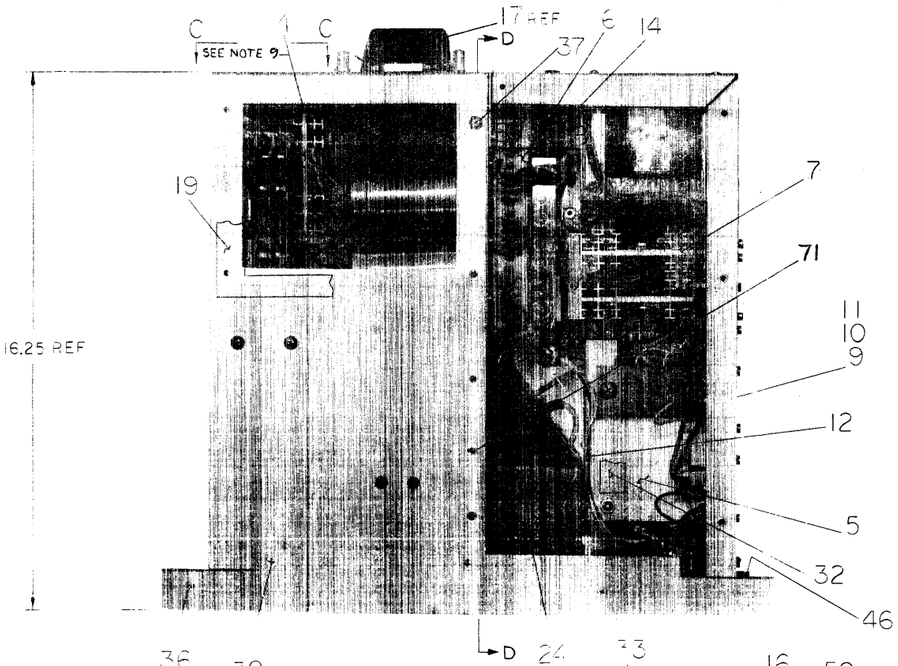

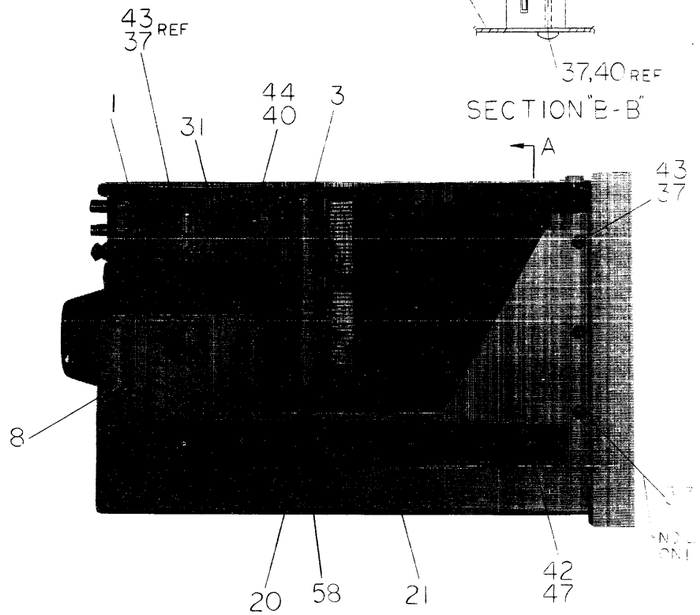

NOTES:

1. FOR DWG INDEX LIST REFER TO D-DI-VR14-Ø-2.
2. REMOVE ITEM #52 (WASHER) AFTER SHIPPING.
3. BEFORE MOUNTING CHASSIS TRACKS (ITEM #21) DRILL OUT BEAD OF METAL AT ONE END OF MIDDLE RUNNER ON BOTH TRACKS. USE 1/8 DRILL.
4. PLACE SHRINKIES, ITEM #55 ON POT-A, POT-B, & POT-C.
5. W684 USED WITH VR14-LC, LD.
6. G840 LIGHT PEN OPTION.
7. WHEN KEYBOARD IS CONNECTED THERE IS + AND − 22 VOLTS ON PIN 22+24 ON INPUT CONNECTOR.
8. CONNECT BLK WIRE ITEM #67 WITH ITEM #'S 68, 69 & 55 FROM TOP SCREW OF CONTROL PANEL TO GND LUG ON HI VOLTAGE SUPPLY ONLY ON C, D, E, LC & LD SYSTEMS.
9. FOR VR14'S LC & LD ROTATE YOKE (SYNTRONIC) SO THAT POINTS 3 & 4 ON YOKE ARE LOCATED ON TOP.

QTY.	DESCRIPTION	PART NO.	ITEM NO.
	PARTS LIST		

FIRST USED ON OPTION/MODEL: VR14

DO NOT SCALE DRAWING
UNLESS OTHERWISE SPECIFIED
DIMENSION IN INCHES
TOLERANCES
DECIMALS ± .005 FRACTIONS ± 1/64 ANGLES ± 0°30'
FINAL SURFACE QUALITY ✓
REMOVE BURRS AND BREAK SHARP CORNERS

MATERIAL

FINISH

		DATE
DRN.	[signature]	12/5/70
CHK'D.	[signature]	12/8/70
ENG.	[signature]	12/6/70
PROJ. ENG.	[signature]	12/8/70
PROD.	[signature]	12/9/70

NEXT HIGHER ASSY: A-ML-VR14-Ø

SCALE: NONE

SHEET 1 OF 4

digital EQUIPMENT CORPORATION
MAYNARD, MASSACHUSETTS

TITLE: VR14 DISPLAY ASSY

SIZE	CODE	NUMBER	REV.
D	UA	VR14-C-Ø	J

DIST.

REVISIONS

CHK	CHANGE NO.	REV.
	VR14-00003	A
	FISHMAN	
	VR14-00009	B
	FISHMAN	
	VR14-00010	C
	FISHMAN	
	VR14-00013	D
	A. FISHMAN	
	VR14-00015	E
	L. GALE	
	VR14-00015	F
	A. FISHMAN	
	VR14-00021	H
	FISHMAN	
	VR14-00022	J
	FISHMAN	

DEC FORM NO. F 100

This drawing and specifications, herein, are the property of Digital Equipment Corporation and shall not be reproduced or copied or used in whole or in part as the basis for the manufacture or sale of items without written permission. 1972

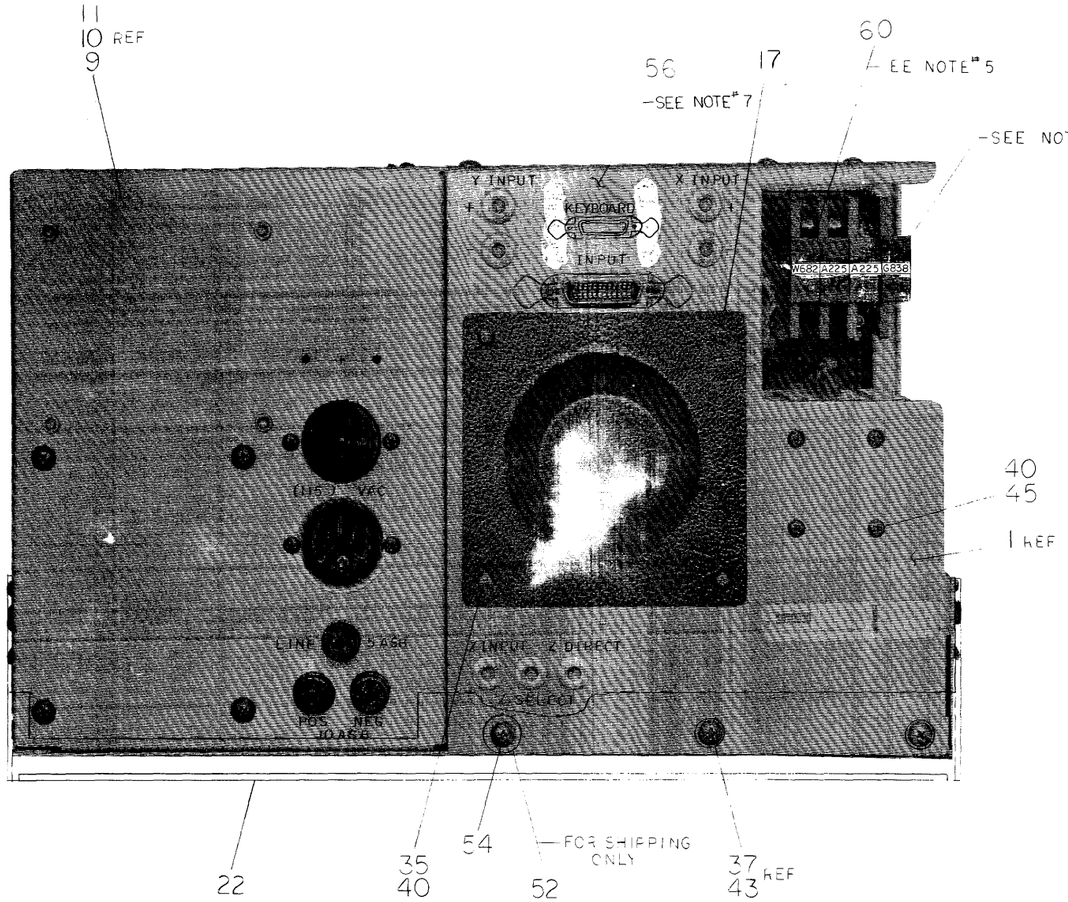

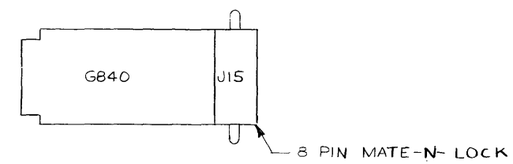

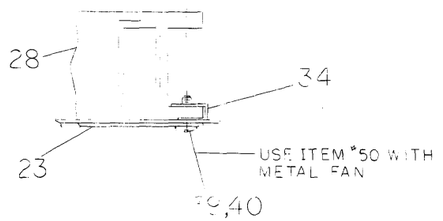

SECTION "C-C"

QTY.	DESCRIPTION	PART NO.	ITEM NO.
	PARTS LIST		

FIRST USED ON OPTION/MODEL: VR14

DO NOT SCALE DRAWING
UNLESS OTHERWISE SPECIFIED
DIMENSION IN INCHES
TOLERANCES
DECIMALS ± .005 FRACTIONS ± 1/64 ANGLES ± 0°30'
REMOVE BURRS AND BREAK SHARP CORNERS

MATERIAL

FINISH

DRN. DATE 12/8/70
CHK'D. DATE 12/8/70
ENG. DATE 12/8/70
PROJ. ENG. DATE 12-5-70
PROD. DATE

NEXT HIGHER ASSY: A-ML-VR14-Ø

SCALE NONE
SHEET 2 OF 4

digital EQUIPMENT CORPORATION
MAYNARD, MASSACHUSETTS

TITLE: VR14 DISPLAY ASSY

SIZE	CODE	NUMBER	REV.
D	UA	VR14-0-Ø	J

DIST.

REVISIONS: CHK | CHK | REV

DEC FORM NO 100

This drawing and specifications, herein, are the property of Digital Equipment Corporation and shall not be reproduced or copied or used in whole or in part as the basis for the manufacture or sale of items without written permission. 1972

HARNESS TABLE

COLOR	HARN.#	MAIN CHASSIS LOC.
RED	1	BNC (L) TOP
BLK	2	BNC (L) BOT
YEL	3	BNC (L) TOP GND
RED	4	BNC (R) TOP
BLK	5	BNC (R) BOT
YEL	6	BNC (R) TOP GND
WHT/BLU	7	A04C
BLK	8	AØ4C
WHT/BLU	10	A04D
WHT/VIO	11	AØ4L
CLEAR	12	A04J
WHT/VIO	13	AØ4L
ORN	14	EØ4C
RED	15	B04J
BRN	16	BØ4A
BRN	17	BØ4B
BRN	18	BØ4A
BRN	19	BØ4B
BRN	20	B04A
BRN	21	B04B
BLK	22	BØ4N
GRN	23	BØ4F
YEL	24	BØ4L
ORN	25	BØ4D
BLU	26	EØ3R
BLK	27	BØ1M
BLU	28	BØ4R
BLK	29	EØ3M
RED	30	BØ4E
GRY/RED	31	BØ4J
BLK	32	B02M
BLU	33	E03R
RED	34	BØ7V
BLK	35	E01M
BLK	36	B04M
RED	37	BØ4V
GRY/BLK	38	AØ1F
GRY/GRN	39	AØ1L
WHT/BLK	40	AØ1E
GRY/GRN	56	PCT-A
GRY/GRN	57	PCT-A
GRY/GRN	58	PCT-A
GRY/VIO	59	PCT-C
GRY/BRN	60	PCT-B
WHT/GRN	81	A04K
WHT/BRN	82	A04P
WHT/YEL	83	A04M
WHT/ORN	84	A04N
GRY/BRN	85	A04E
BLK	86	B04M
RED	87	E03V

HARNESS TABLE CONT

COLOR	HARN.#	MAIN CHASSIS LOC.
BLK	88	BC1
BLU	89	BC4R
GRY/GRN	90	AC4T
RED	91	AC2E
BLK	92	AC2B
YEL	93	AC2H
RED	94	AC3E
BLK	95	AØ3B
YEL	96	AØ3H
BLK	97	CAP1- NEG
RED	98	CAP1- POS
BLK	99	CAP2- POS
BLU	100	CAP2- NEG
BLK	101	C-GND POINT
WHT/VIO	102	P1-1
CLEAR	103	P1-4
BLU	104	P1-16
WHT/BLU	105	P1-13
BLK	106	C-GND POINT
CLEAR	107A	Z INPUT
WHT/VIO	108	Z SELECT
BLK	109	Z **INPUT GND**
WHT/BLU	110	Z **DIRECT**
CLEAR	107C	Z INPUT
SHIELD	107B	Z INPUT GND
SHIELD	102D	C-GND POINT
SHIELD	107	Z INPUT GND
SHIELD	11A	AØ4C
WHT/RED	105C	P1-2
WHT/RED	6A	AØ4B
GRN	105B	P1-3
GRN	10A	AØ4K
VIO	105A	P1-14
VIO	13A	AØ4V
BRN	102A	P1-19
BRN	96A	AØ1H
BLU	101C	P2-3
BLU	96F	CAP2-NEG
BLK	101B	P2-2
BLK	96D	CAP2-POS
RED	101A	P2-1
RED	96B	CAP1-POS
BLU	102C	P2-14
BLU	96E	CAP2-NEG
BLK	102B	P2-13
BLK	96C	CAP2-POS

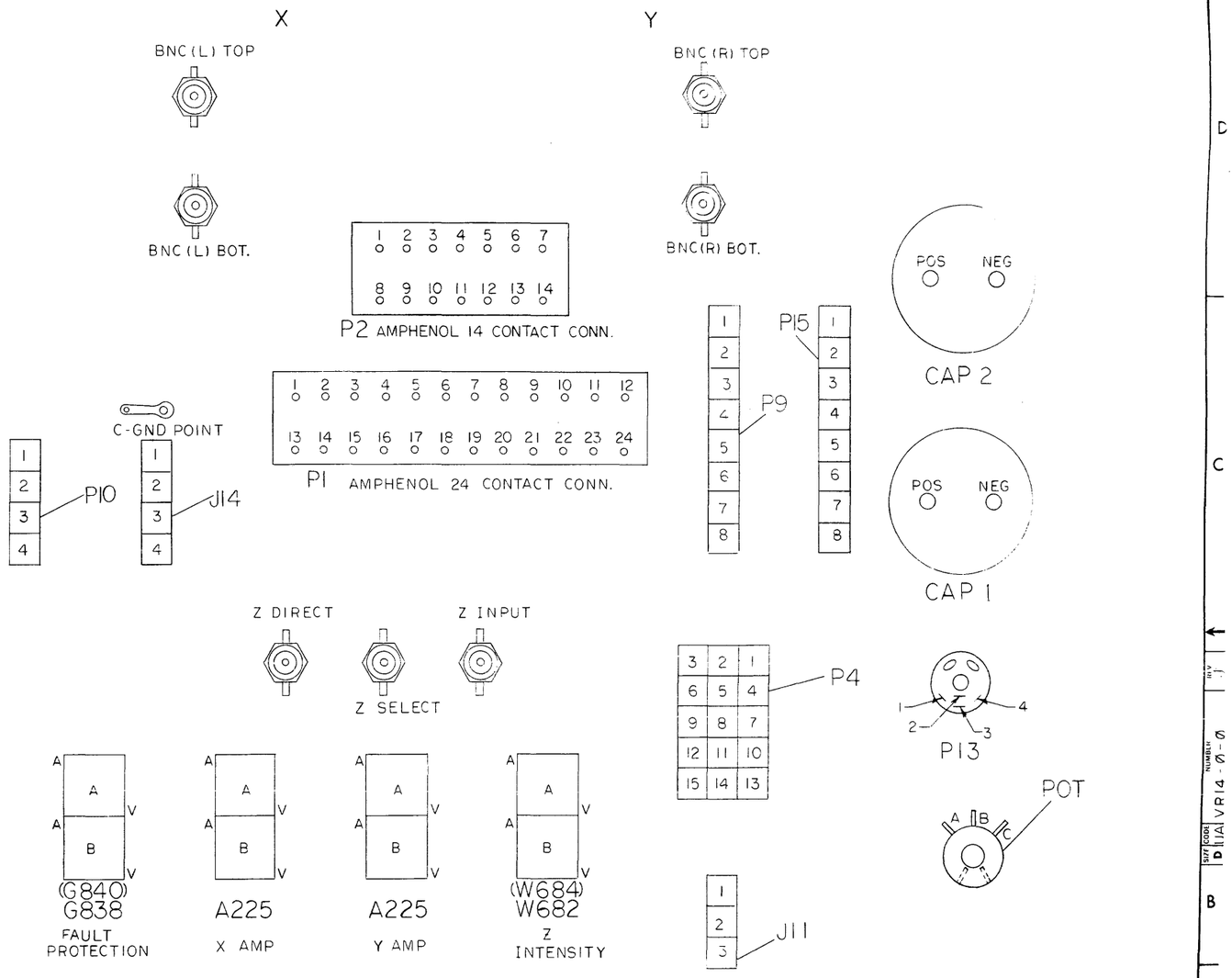

NOTE: ALL ABOVE PARTS SHOWN ARE VIEWED FROM WIRING SIDE. P15 PLUGS INTO J15 ON 6840.

REVISIONS	REV	CHANGE NO	CHK

FIRST USED ON OPTION/MOD	QTY.	DESCRIPTION	PART NO.	ITEM NO.
VR14		PARTS LIST		

UNLESS OTHERWISE SPECIFIED

UNLESS OTHERWISE SPECIFIED
DIMENSION IN INCHES
TOLERANCES
DECIMALS ± .005 FRACTIONS ± 1/64 ANGLES ± 0°30'
FINAL SURFACE QUALITY / REMOVE BURRS AND BREAK SHARP CORNERS

MATERIAL

FINISH

DRN.	K Gable	DATE 11/5/70
CHK'D.	K Gable	DATE 11/25/70
ENG.	K Gable	DATE 12/8/70
PROJ. ENG.		DATE
PROD.		DATE 12/8/70

digital EQUIPMENT CORPORATION MAYNARD MASSACHUSETTS

TITLE: VR14 DISPLAY ASSY

NEXT HIGHER ASSY: D-UA-VR14-Ø-Ø

SCALE NONE

SHEET 3 OF 3

SIZE	CODE	NUMBER	REV
D	UA	VR14-Ø-Ø	J

DIST. G

DEC FORM NO. DRD 100

This drawing and specifications, herein, are the property of Digital Equipment Corporation and shall not be reproduced or copied or used in whole or in part as the basis for the manufacture or sale of items without written permission. 1972

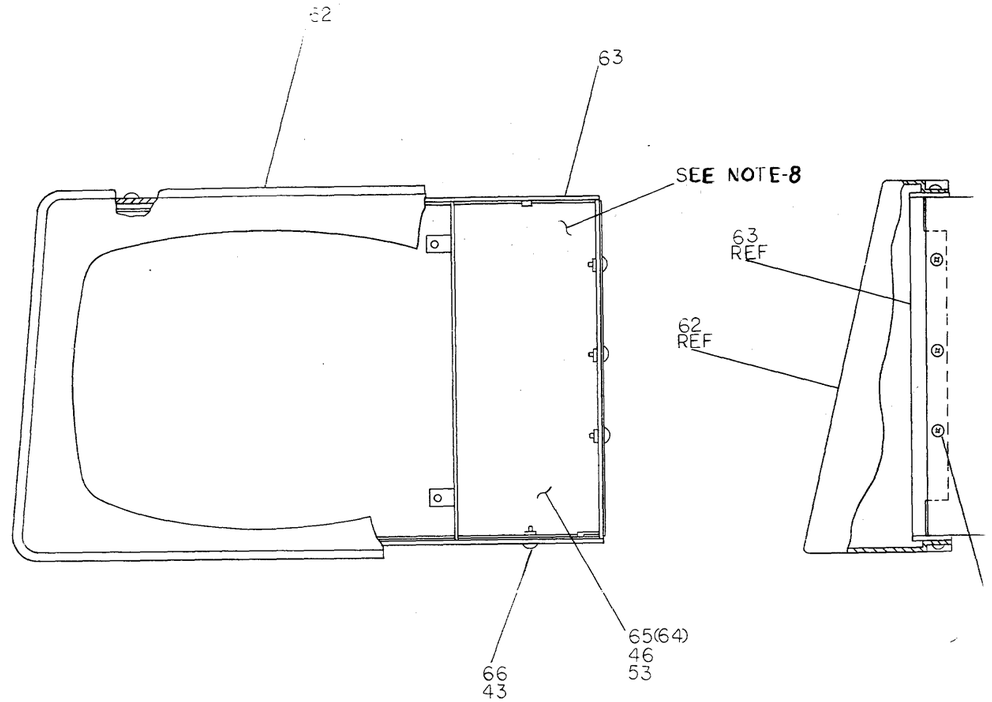

SECTION "D-D"

DESCRIPTION	PART NO.	ITEM NO.
PARTS LIST		

UNLESS OTHERWISE SPECIFIED DIMENSION IN INCHES TOLERANCES

DECIMALS	ANGLES
XXX = .005	±0° 30'
X = 1	

REMOVE BURRS AND BREAK SHARP CORNERS SURFACE QUALITY ✓

MATERIAL

DRN. CBMcCy	DATE 10-16-72	digital EQUIPMENT CORPORATION MAYNARD MASSACHUSETTS
CHK'D	DATE 10-18-72	
ENG.	DATE 10-18-72	TITLE VR14 DISPLAY ASSY
PROJ. ENG.	DATE 10-18-72	
PROD.	DATE	

NEXT HIGHER ASSY. A-ML-VR14-Ø

SCALE NONE

SHEET 4 OF 4

SIZE	CODE	NUMBER	REV.
D	UA	VR14-0-Ø	J

DIST.

REVISION: REV | CHANGE NO. | CHK

BRUNING 40-107 15968

DEC FORM NO DRD 100-A

DIGITAL EQUIPMENT CORPORATION
MAYNARD, MASSACHUSETTS

PARTS LIST

MADE BY D.K. CRABBE	CHECKED D.K. Crabbe	SECTION 1
DATE 12-2-70	DATE 12/8/70	
ENG D.K. Crabbe	PROD R Peterson	ISSUED SECT. 1
DATE 12/8/70	DATE 12/8/70	

ITEM NO.	DWG NO./PART NO.	DESCRIPTION	QUANTITY/VARIATION VR14-Ø	VR14-A	VR14-B	VR14-C	VR14-D	VR14-E	VR14-LC	VR14-LD
1	D-AD-7007077-0-0	TOP MTG ASSY	1	1	1	1	1	1	1	1
2	C-IA-7409068-0-0	PANEL, CONTROL	1	1	1	-	-	-	-	-
3	D-AD-7007078-0-0	WIRED ASSY	1	1	1	1	1	1	1	1
4	D-IA-7007088-0-0	C.R.T. YOKE ASSY	1	1	1	1	1	1	1	1
5	D-AD-7007079-0-0	HIGH VOLTAGE ASSY	1	1	1	1	1	1	1	1
6	D-AD-7007165-0-0	POWER REGULATOR ASSY (VR14)	1	1	1	1	1	1	1	1
7	D-AD-7007080-0-0	POWER SUPPLY HEAT SINK ASSY	1	1	1	1	1	1	1	1
8	D-AD-7007082-0-0	DEFLECTION HEAT SINK ASSY	1	1	1	1	1	1	1	1
9	D-AD-7007084-1-0	POWER SUPPLY ASSY	1	-	-	1	-	-	1	-
10	D-AD-7007084-2-0	POWER SUPPLY ASSY	-	1	-	-	1	-	-	1
11	D-AD-7007084-3-0	POWER SUPPLY ASSY	-	-	1	-	-	1	-	-
12	E-IA-7008457-0-0	MAIN CHASSIS HARNESS	1	1	1	1	1	1	1	1
13	C-IA-7408411-0-0	GROUND, TUBE	1	1	1	1	1	1	1	1
14	C-IA-7408409-0-0	SHIELD, SAFETY	1	1	1	1	1	1	1	1
15	C-MD-7408414-0-0	HOLDER, CARD	1	1	1	1	1	1	1	1
16	E-IA-7406891-0-0	BEZEL, CONTROL PANEL	1	1	1	1	1	1	1	1
17	C-MD-7408434-0-0	CAP (VR14)	1	1	1	1	1	1	1	1
18	D-MD-7406837-0-0	MASK, CATHODE RAY TUBE	1	1	1	-	-	-	-	-
19	D-IA-7408408-0-0	SCREEN, SAFETY (VR14)	1	1	1	1	1	1	1	1
20	D-IA-7408400-0-0	PLATE, BOTTOM MTG.	1	1	1	1	1	1	1	1
21	D-SC-1209147-0-0	SLIDE, 16" TRAVEL CHASSIS TRACK	1 pr	1 pr	1 pr	-	-	-	-	-
22	D-MD-7408549-0-0	CHASSIS TRACK BRACE	1	1	1	-	-	-	-	-

TITLE	ASSY NO.	SIZE	CODE	NUMBER	REV.	ECO NO.
VR14 DISPLAY ASSY	D-UA-VR14-Ø-Ø	A	PL	VR14-Ø-Ø	J	VR14-00022
	SHEET 1 OF 4	DIST.	G			

DEC FORM NO.16-1031

DIGITAL EQUIPMENT CORPORATION
MAYNARD, MASSACHUSETTS

PARTS LIST

MADE BY D. CRABBE	CHECKED D.K. Crabbe	SECTION 1
DATE 12-2-70	DATE 12/8/70	
ENG D.K. Crabbe	PROD R Peterson	ISSUED SECT. 1
DATE 12/8/70	DATE 12/8/70	

ITEM NO.	DWG NO./PART NO.	DESCRIPTION	QUANTITY/VARIATION VR14-Ø	VR14-A	VR14-B	VR14-C	VR14-D	VR14-E	VR14-LC	VR14-LD
23	C-MD-7404881-0-0	FAN, SCREEN	2	2	2	2	2	2	2	2
24	E-SC-1210104-0-0	C.R.T. SHIELD	1	1	1	1	1	1	2	2
25	~~D-IA-7407791-0-0~~	~~SUPER COVER VR14~~				1	1	1		
26	~~B-MD-7407793-0-0~~	~~SPACER~~				1	1	1		
27	~~B-MD-7407794-0-0~~	~~BAR, SPACER~~				1	1	1		
28	1209403-0	FAN, BOXER 7, BLADE	2	2	2	2	2	2	2	2
29	1209597-6	CATHODE RAY TUBE TYPE 12 M63 THOMAS	1	1	1	1	1	1	1	1
30	1209576	KNOB # SS-70L-2-BLK BUCKEYE	1	1	1	1	1	1	1	1
31	1009434	CAPACITOR, 5500 MFD 40 VDC-10, +100%	2	2	2	2	2	2	2	2
32	3610267	"DANGER HIGH VOLTAGE" STICKER	1	1	1	1	1	1	1	1
33	9006584	SPEED NUT #C8091-6-32-4 TINNERMAN	4	4	4	4	4	4	4	4
34	9008202	CLIP, FAN TINNERMAN	8	8	8	8	8	8	8	8
35	9006022-1	SCR, FAN HD PHL #6-32 X 3/8 SST	4	4	4	4	4	4	4	4
36	9006024-2	SCR, FLAT HD PHL #6-32 X ½ SST	4	4	4	4	4	4	4	4
37	9006071-3	SCR, PHL TRUSS HD #10-32 X 3/8 SST	49	49	49	49	49	49	49	49
38	9006071-2	SCR, PHL FLAT HD #10-32 X 3/8 SST	5	5	5	5	5	5	5	5
39	9006024-1	SCR, PAN HD PHL #6-32 X ½ SST	8	8	8	8	8	8	8	8
40	9006633	WASHER, LOCK INT TOOTH #6	26	26	26	26	26	26	26	26
41	9006560	NUT, KEPS #6-32	5	5	5	5	5	5	5	5
42	9006070-1	SCR, PHL TRUSS HD #10-32 X 5/16 SST	10	10	10	2	2	2	2	2
43	9006635	WASHER, LOCK INT TOOTH #10	61	61	61	61	61	61	61	61
44	9006020-1	SCR, PHL PAN HD #6-32 X ¼ SST	4	4	4	4	4	4	4	4

TITLE	ASSY NO.	SIZE	CODE	NUMBER	REV.	ECO NO.
VR14 DISPLAY ASSY.	D-UA-VR14-Ø-Ø	A	PL	VR14-Ø-Ø	J	
	SHEET 2 OF 4	DIST.	G			

DEC FORM NO.16-1031
DRA 110

DIGITAL EQUIPMENT CORPORATION
MAYNARD, MASSACHUSETTS

PARTS LIST

MADE BY	D. CRABBE	CHECKED	D. CRABBE	SECTION	1
DATE	12-2-70	DATE	12-8-70		
ENG	D. CRABBE	PROD	R. PETERSON	ISSUED SECT.	1
DATE	12-8-70	DATE	12-8-70		

ITEM NO.	DWG NO / PART NO.	DESCRIPTION	QUANTITY/VARIATION VR14-Ø	VR14-A	VR14-B	VR14-C	VR14-D	VR14-E	VR14-LC	VR14-LD
45	9006021-1	SCR, PHL PAN HD #6-32 X 5/16 SST	10	10	10	10	10	10	10	10
46	9006563	NUT, KEPS #8-32	2	2	2	3	3	3	3	3
47	9007651	WASHER, LOCK EXT TOOTH #10	8	8	8	-	-	-	-	-
~~48~~	~~9006074-2~~	~~SCR, PHL FLAT HD #10-32 X 5/8 SST~~				~~1~~	~~1~~	~~1~~		
49	9006025-2	SCR, PHL FLAT HD #6-32 X 5/8 SST	-	-	-	2	2	2	2	2
50	9006121	SCR, SELF-TAPPING #8-32 X 3/8 SST	8	8	8	8	8	8	8	8
~~51~~	~~9006071-1~~	~~SCR, PHL PAN HD #10-32 X 3/8 SST~~	~~6~~	~~6~~	~~6~~	~~6~~	~~6~~	~~6~~		
52	9008146	WASHER, FLAT .63 OD X .23 ID X .048 THK	1	1	1	-	-	-	-	-
53	9006660	WASHER, FLAT .375 OD X .187 X .036 THK	-	-	-	3	3	3	3	3
54	9006074-3	SCR, PHL TRUSS HD #10-32 X 5/8 SST	1	1	1	-	-	-	-	-
55	9107305	SHRINKIES (RED)	3	3	3	3	3	3	3	3
56	7408407	DECALS (VR14)	1	1	1	1	1	1	1	1
57	C-IA-7408425-0-0	PANEL CONTROL (GT-40)								
58	7007006-3	JUMPER	1	1	1	1	1	1	1	1
59	7008976	CHANNEL SELECT SWITCH	1	1	1	1	1	1	-	-
60	C-UA-375-0-0	LIGHT PEN OPTION	A/R	A/R	A/R	A/R	A/R	A/R	A/R	A/R
61	D-AD-7009027-0-0	SUPER COVER ASSY	-	-	-	1	1	1	1	1
62	E-PS-1211106-0-0	MASK	-	-	-	1	1	1	1	1
63	E-IA-7409964-0-0	BRACE CHASSIS	-	-	-	1	1	1	1	1
64	C-IA-7409977-0-0	PANEL CONTROL (GT-40)	-	-	-	-	-	-	1	1
65	C-IA-7409974-0-0	PANEL CONTROL (PDP-12)	-	-	-	1	1	1	-	-
66	9006073-3	SCR, PHL TRUSS HD #10-32 X ½ SST	-	-	-	6	6	6	6	6

TITLE	ASSY NO.	SIZE	CODE	NUMBER	REV.	ECO NO.
VR14 DISPLAY ASSY	D-UA-VR14-Ø-Ø	A	PL	VR14-Ø-Ø	J	
	SHEET 3 OF 4	DIST.	G			

DEC FORM DEC 16 (325)-1031-N870
DRA 110

DIGITAL EQUIPMENT CORPORATION
MAYNARD, MASSACHUSETTS

PARTS LIST

MADE BY	D. CRABBE	CHECKED	D. CRABBE	SECTION	
DATE	12-2-70	DATE	12-8-70		
ENG	D. CRABBE	PROD	R. PETERSON	ISSUED SECT.	
DATE	12-8-70	DATE	12-8-70		

ITEM NO.	DWG NO. / PART NO.	DESCRIPTION	QUANTITY/VARIATION VR14-0	VR14-A	VR14-B	VR14-C	VR14-D	VR14-E	VR14-LC	VR14-LD
67	9107360-0-0	WIRE #18 AWG IVPC BLK	-	-	-	A/R	A/R	A/R	A/R	A/R
68	9007930-0	CONN, ARKLES #50360-1	-	-	-	1	1	1	1	1
69	9007925-0	CONN, #300H21A-1K	-	-	-	1	1	1	1	1
70	9006637	WASHER, INT TOOTH 3/8 ID #1220	1	1	1	1	1	1	1	1
71	9007081	CLAMP, CABLE 1/4 ID	1	1	1	1	1	1	1	1

TITLE	ASSY NO.	SIZE	CODE	NUMBER	REV.	ECO NO.
VR14 DISPLAY ASSY	D-UA-VR14-0-0	A	PL	VR14-0-0	J	
	SHEET 4 OF 4	DIST.				

EC FORM DEC 16-(325)-1031-N870
A 110

This drawing and specifications, herein, are the property of Digital Equipment Corporation and shall not be reproduced or copied or used in whole or in part as the basis for the manufacture or sale of items without written permission. 1972

EXTERNAL COMPONENTS TABLE						
ITEM	COMP	POL	FROM	TO	POL	REMARKS
8	RES		AØ4U	AØ4T		100K
9	XRES		SEE WIRE TABLE			0.5Ω
9	YRES		SEE WIRE TABLE			0.5Ω
32	CAP		AØ1K	AØ1V		20. MFD
36	RES		BØ4F	BØ4N		470K

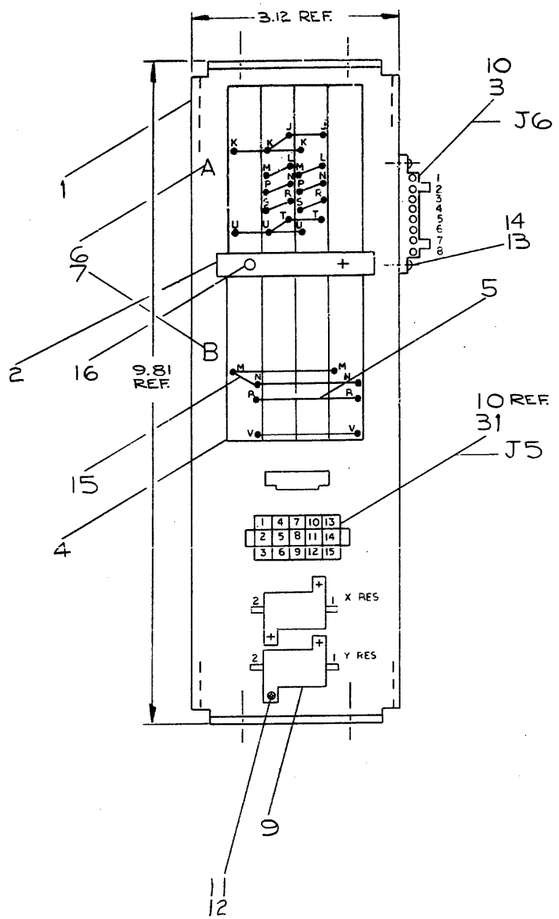

WIRE TABLE						
SIGNAL NAME	ITEM NO	DESCRIPTION AWG	COLOR	CONNECTION FROM	TO	
	5			AØ2T	AØ3T	
				AØ1J	AØ3U	
				AØ2J	AØ3J	
				AØ1K	AØ3K	
				BØ1N	BØ4N	
				BØ1M	BØ4M	
				BØ1R	BØ4R	
	5			BØ1V	BØ4V	
	15	18	BUS	AØ2J	AØ2K	
				AØ2T	AØ2U	
				AØ2S	AØ2R	
				AØ2N	AØ2P	
				AØ2L	AØ2M	
				AØ3S	AØ3R	
				AØ3N	AØ3P	
				AØ3L	AØ3M	
	15		BUS	BØ1N	BØ1M	
+20 DC	17		RED	BØ2V	J5-1	
+20 DC	17		RED	BØ2V	J5-15	
	22		YEL/GRY	AØ2S	J5-2	
	22		YEL/GRY	AØ3S	J5-14	
	23		BLU/GRY	AØ2M	J5-4	
	23		BLU/GRY	AØ3M	J5-12	
-20 DC	20		BLU	BØ2R	J5-5	
-20 DC	20		BLU	BØ2R	J5-11	
X YOKE HOT	19		GRY	AØ2P	J5-3	
Y YOKE HOT	21		VIO	AØ3P	J5-13	
X YOKE HOT	19		GRY	AØ2N	J6-1	
Y YOKE HOT	21		VIO	AØ3N	J6-8	} SEE NOTE #1
X YOKE RETURN	18		WHT	J6-2	XRES-2	
Y YOKE RETURN	18		WHT	J6-7	YRES-1	
+20 DC	17		RED	BØ1V	AØ2U	
-20 DC	20		BLU	BØ1R	AØ2K	
GND	24		BLK	AØ3V	BØ3M	
GND	24		BLK	XRES-1	AØ2V	} SEE NOTE #1
GND	24	18	BLK	YRES-2	AØ3V	
	26	22	YEL	BØ4L	AØ4U	
	25		GRN	BØ4F	AØ4F	
X SAMPLE	29		WHT	AØ1A	XRES-2	} SEE NOTE #1
Y SAMPLE	29		WHT	AØ3A	YRES-1	
X SIG GND	27		BLK	AØ2H	AØ2V	
Y SIG GND	27		BLK	AØ3H	AØ3V	
+5V	28		RED	AØ1P	AØ4A	
GND	27		BLK	AØ4C	BØ3M	
GND	27		BLK	XRES-1	AØ2H	} SEE NOTE #1
GND	27	22	BLK	YRES-2	AØ3H	
	5			AØ1A	AØ2A	
	5			AØ1D	AØ2D	
GND	24	18	BLK	AØ1V	BØ2M	
GND	24	18	BLK	AØ2V	BØ2M	
	29	22	WHT	AØ3A	AØ1B	
	29	22	WHT	AØ3D	AØ1C	
-80V	35	18	GRY/GRN	AØ4S	AØ1L	
	34	22	WHT/BLK	AØ1E	AØ4H	
GND	27	22	BLK	AØ1S	AØ4C	

NOTES:
1. TWIST (2 WIRES) 3 TWIST PER INCH MIN & 4 TWIST PER INCH MAX.
2. USE TERMIPOINT CONNECTORS ON ITEMS 8+32

SIGNAL NAME	ITEM NO	AWG	COLOR	FROM	TO
Z INT	19	22	WHT	AØ1M	AØ4J

FIRST USED ON OPTION/MODEL: VR14

DO NOT SCALE DRAWING

UNLESS OTHERWISE SPECIFIED
DIMENSION IN INCHES
TOLERANCES
DECIMALS ±.005 FRACTIONS ±1/64 ANGLES ± 0°30'
FINAL SURFACE QUALITY √
REMOVE BURRS AND BREAK SHARP CORNERS

MATERIAL

FINISH

REVISIONS				
CHK	CHANGE NO.	REV		
FV	VR14-00002	A	M. Garvey	1-6-71
			A. FISHMAN	
	VR14-00010	B	M. Garvey	1-27-71
			FISHMAN	
	VR14-00014	C	A. FISHMAN	11-2-71
	VR14-00019	D	A. FISHMAN	3-7-72
	VR14-00021	E	A. FISHMAN	3-23-72
	VR14-00022	F	FISHMAN	11-2-72

DEC FORM NO. CAD 100

QTY.	DESCRIPTION	PART NO.	ITEM NO.

PARTS LIST

DRN: DATE 5/26/70
CHKD: DATE 10/2/70
ENG: DATE 11/6/70
PROJ. ENG: DATE 11-6-70
PROD: DATE 11/6/70

digital EQUIPMENT CORPORATION MAYNARD, MASSACHUSETTS

TITLE: WIRED ASSY (VR14)

NEXT HIGHER ASSY: D-UA-VR14-Ø-Ø

SCALE: NONE

SHEET 1 OF 1

SIZE D | CODE AD | NUMBER 7007078-0-0 | REV. F

DIST.

DIGITAL EQUIPMENT CORPORATION
MAYNARD, MASSACHUSETTS

PARTS LIST

MADE BY J. Cahill	CHECKED D. Crabbe	SECTION 1
DATE 10/2/70	DATE 10/2/70	
ENG D.K. Crabbe	PROD R Peterson	ISSUED SECT. 1
DATE 11/6/70	DATE 11/6/70	

ITEM NO	DWG NO. / PART NO.	DESCRIPTION	QUANTITY / VARIATION
1	D-IA-740 422-0-0	FRAME,LOGIC	1
2	B-MD-740 114-0-0	BAR,MTG	1
3	1209340- 0	8 CIRCUIT MATE-N-LOK SOCKET AMP	1
4	1202244	144 CONNECTOR BLOCK	1
5	1202188	VOLTAGE CHAIN	A/R
6	A-SS-530 753-0-2	LOGIC FRAME DECALS	A/R
7	A-SS-530 753-0-4	LOGIC FRAME DECALS	A/R
8	1302466	RESISTOR 100K 1/4W 5%	1
9	1310180	RESISTOR 0.5Ω 20W 1%	2
10	1209379- 1	CONTACT TERM PIN SOCKET AMP. INC.	14
11	9006011-	SCR,PHL HD PAN #4-40 x 3/8 SST	4
12	9006557	NUT,KEPS #4-40	4
13	9006021-	SCR,PHL HD PAN *6-32 x 5/16 SST	2
14	9006560	NUT,KEPS #6-32	2
15	9107560-	#18 AWG SOLID BUSSING	A/R
16	9006120	POZIDRIVE SCR FIL HD 8-32 x 5/8 SST	2
17	9107360-2 2	#18 AWG STRD TEFLON (RED)	A/R
18	9107360-9 9	#18 AWG STRD TEFLON (WHITE)	A/R
19	9107360-8 8	#18 AWG STRD TEFLON (GRAY)	A/R
20	9107360-6 6	#18 AWG STRD TEFLON (BLUE)	A/R
21	9107360-7 7	#18 AWG STRD TEFLON (VIO)	A/R
22	9107410-8 4	#18 AWG STRD TEF TRACER (GRAY/YELLOW)	A/R

TITLE	ASSY NO.	SIZE	CODE	NUMBER	REV	ECO NO.
WIRED ASSEMBLY (VR14)	D-AD-7007078-0-0	A	PL	7007078-0-0	F	VR14-00022
	SHEET 1 OF 2	DIST.	G			

DEC FORM NO.16-1031
DRA 110

DIGITAL EQUIPMENT CORPORATION
MAYNARD, MASSACHUSETTS

PARTS LIST

MADE BY J. Cahill	CHECKED D. Crabbe	SECTION 1
DATE 11/3/70	DATE 11/3/70	
ENG D.K. Crabbe	PROD R. Peterson	ISSUED SECT. 1
DATE 11/6/70	DATE 11/6/70	

ITEM NO.	DWG NO. / PART NO.	DESCRIPTION	QUANTITY / VARIATION
23	9107410- 36	#18 AWG STRD TEF TRACER (GRY/BLU)	A/R
24	9107360- 00	#18 AWG STRD TEF WIRE (BLACK)	A/R
25	9107350- 55	#22 AWG STRD TEF WIRE (GREEN)	A/R
26	9107350- 44	#22 AWG STRD TEF WIRE (YELLOW)	A/R
27	9107350- 00	#22 AWG STRD TEF WIRE (BLACK)	A/R
28	9107350- 22	#22 AWG STRD TEF WIRE (RED)	A/R
29	9107350- 99	#22 AWG STRD TEF WIRE (WHITE)	A/R
30	9107256- 1	#22 TEF TUBING (BLACK)	A/R
31	1209350- 15	CONN PIN HOUSING MATE-N-LOK AMP	1
32	1010195 -0	CAPACITOR 20 mFd 100V 10%	1
33	9007230	TERMI POINT CONNECTORS	6
34	9107420 -09	#22 AWG STRD TEF TRACER (BLK/WHT)	A/R
35	9107410 -85	#18 AWG STRD TEF TRACER (GRY/GRN)	A/R
36	1302398	RES. 470K 1/4W 5%	1

TITLE	ASSY NO.	SIZE	CODE	NUMBER	REV	ECO NO.
WIRED ASSEMBLY (VR14)	D-AD-7007078-0-0	A	PL	7007078-0-0	F	
	SHEET 2 OF 2	DIST.				

DEC FORM NO.16-1031
DRA 110

Copyright Corporation and shall not be reproduced or copied or used in whole or in part as the basis for the manufacture or sale of items without written permission.

DIGITAL EQUIPMENT CORPORATION
MAYNARD, MASSACHUSETTS

ENGINEERING SPECIFICATION

DATE 10/22/70

TITLE VR14 SPECIFICATION

REVISIONS

REV	DESCRIPTION	CHG NO	ORIG	DATE	APPD BY	DATE

GENERAL DESCRIPTION

The VR14 is a self-contained CRT display unit requiring only analog position and digital unblanking information. It is designed for use with a digital display controller. The amount of information displayed depends on the specific system; however, 1250 random points can be displayed flicker free at a 40 Hz. refresh rate. Viewable area is 62 inches square with an aspect ratio of 3:4. The unit is 10 1/2 inches high, 19 inches wide, 17 inches deep, and weighs about 75 pounds. It is available in either a rack mounted or table top model.

OPERATOR CONTROLS (All controls labeled as to function)

Front Panel:

Brightness / ON-OFF	Manual brightness control and AC power switch.
Channel Select	Operator selection of either channel 1 or channel 2 if a time multiplexed signal is available.

Internal Controls: These controls accessible from the top of the unit through the safety screen.

Deflection Controls: The following controls are 10 turn pots located on the deflection amplifiers (A225). All inputs have protection against momentary excessive voltage.

X Gain	Controls horizontal input sensitivity.
Y Gain	Controls vertical input sensitivity.
X Position	Manual Position Control.
Y Position	Manual Position Control.

NOTE: With deflection inputs grounded, the position controls allow the beam to be positioned anywhere within the usable screen area.

ENG	APPD	SIZE	CODE	NUMBER	REV
C Fishman 10/28/70	L. Gale 10/28/70	A	SP	VR14 -Ø - 4	

DEC FORM NO. DRA 107

ENGINEERING SPECIFICATION — digital — CONTINUATION SHEET

TITLE VR14 SPECIFICATION

CRT Controls: These controls are 10 turn pots located on the G836 power supply module. Their purpose is to adjust focus and grid bias voltages. They are adjusted at the factory.

Focus: Adjusted for best overall focus.

Brightness Preset: To adjust the range of the front panel brightness control.

GENERAL ELECTRICAL SPECIFICATION

Spot Size: ≤ 20 mils inside the usable screen area at a brightness of 30 footlamberts. Spot size is measured using shrinking raster technique at a brightness of greater than 30 footlamberts.

Jitter: ≤ ± 1/2 spot diameter.

Repeatability: ≤ ± 1 spot diameter
(Repeatability is the deviation from the nominal location of any given spot)

Gain Change: From a fixed point on the screen, less than ± 0.3 percent gain change for each ± 1 percent line voltage variation.

Temperature Range: 0 to 50°C operating

Relative Humidity: 10 to 90 percent noncondensing.

Brightness: ≥ 30 footlamberts; measured using a shrinking raster technique.

Linearity: Maximum deviation of any straight line will be ≤ 1 percent of the line length measured perpendicular to a best fit straight line.

Deflection Method: Magnetic (70° diagonal deflection angle)

Focus Method: Electrostatic

High Voltage: 11.7 KV DC nominal (voltage proportional to input line voltage). Supply is self-contained and equipped with a bleeder resistor.

Shielding: CRT is fully enclosed in a magnetic shield.

Overload Protection: Unit is protected against fan failure or air blockage by thermal cutouts.

	SIZE	CODE	NUMBER	REV
	A	SP	VR14 - Ø - 4	

DEC FORM NO 16-1022

DEFLECTION AMPLIFIER SPECIFICATION

1. Deflection Amplifiers are DC coupled and are capable of sustaining a worst case AC or DC deflection at environmental extremes.

2. Input Specification

   A. Inputs are differential.
   B. Differential input impedance . . . 5K ohms minimum.
   C. Input sensitivity . . . 200 mv/inch maximum.
   D. Common Mode Rejection Ratio . . . 40 db.
   E. Maximum Operating Input . . . ± 6V. (Maximum operating input is the sum of the common mode input and the differential input.)
   F. Input offset not to exceed ± 1/2 peak to peak input signal.
   G. Maximum non-operating input . . . ± 50V.

3. Full screen deflection and settling time to within ± 1 spot diameter . . . . . ≤ 18 µs.

4. Small signal settling time to within 1/2 spot diameter . . . ≤ 1 µs for a 0.1 inch deflection.

5. Small signal linear slew rate . . . ≥ 0.4 in 1 µs.

6. Velocity error coefficient . . . 500 ns. maximum. (Average ramp delay between input and output.)

Z AXIS SPECIFICATION

1. Z Input
   A negative transition from ≥ +2.4V, but not exceeding +8V, to ≤ +0.8V, but not less than -4V, in ≤ 20 ns will cause an unblanking pulse at the CRT cathode from approximately +60V to ground with a duration of ≥ 200 ns at the 50 percent points. Delay between the 50 percent point of the negative input transition to the 50 percent point of the output pulse is less than 100 ns.

2. Z Direct
   A positive going pulse not exceeding 35V, but at least 20V in height and not exceeding 10 µs, but at least 1 µs in duration will unblank the CRT to a viewable intensity. This signal is AC coupled to the CRT grid.

3. Channel Select
   With the Channel Select Switch in the Channel 1 position, a positive level of greater than +2.4V, but not exceeding +8V will enable the Z input circuit. A level of less than +0.8V but not less than -4V will disable the circuit. With the switch in the Channel 2 position, a positive level will enable the Z circuit; a negative level will disable it. Placing the switch in the Channel 1 and 2 position disables this input.

POWER SUPPLY SPECIFICATION

1. All power supplies necessary for operation of the unit are self contained.

2. Input Requirements

   Voltage: 100 V ± 10 percent
   117 V ± 10 percent
   230 V ± 10 percent

   Selectable by tap changes.

   Frequency: 50 - 60 Hz.

   Power: ≤ 500 Watts

   Current: ≤ 5 Amperes

   Type: Single Phase

   NOTE: Different AC power receptacles are provided on 200 and 230 V Units.

3. Fuses are provided and labeled as to function, type, and rating for the primary circuit and deflection power circuits.

4. Thermal Cutouts, which operate on the AC primary, are used to prevent damage due to fan failure, air blockage, or excessive ambient temperature.

REAR PANEL CONNECTIONS

Deflection Inputs: BNC connectors labeled X+, X-, and Y+, Y-.

With operator facing the screen and the polarity switches in the up position, if X+ is positive with respect to X-, deflection is to the right and, if Y+ is positive with respect to Y-, deflection is up.

CRT Inputs: BNC connectors labeled Z input, Z direct, and channel.

Z input is a TTL compatible input which generates a pulse at the CRT cathode for each negative transition.

Z direct is an AC coupled input to the CRT grid circuit.

Channel is a TTL compatible input which, in conjunction with the Channel Select Switch, enables or disables the Z input circuit.

NOTE: All above inputs are available at a 24 pin plug, DEC No. 1209630.

This drawing and specifications, herein, are the property of Digital Equipment Corporation and shall not be reproduced or copied or used in whole or in part as the basis for the manufacture or sale of items without written permission.

DIGITAL EQUIPMENT CORPORATION
MAYNARD, MASSACHUSETTS

ENGINEERING SPECIFICATION DATE 9/20/71

TITLE VR14 CHECKOUT AND ACCEPTANCE PROCEDURE

REVISIONS

REV	DESCRIPTION	CHG NO	ORIG	DATE	APPD BY	DATE
A	ECO CHANGE	00015	A.FILZ	3/72	G Fishman	3-28-72
B	ECO CHANGE	00022	A FISHMAN	1/73	G C Fishman	1-16-73

ENG	APPD	SIZE	CODE	NUMBER	REV
G. Fishman 9-21-71		A	SP	VR14-0-5	B

DEC FORM NO. DRA 107

ENGINEERING SPECIFICATION [redacted] CONTINUATION SHEET

TITLE

VR14 CHECKOUT PROCEDURE AND ACCEPTANCE PROCEDURE *

I. INTRODUCTION

The VR14 is a completely self-contained CRT display providing a 6.75 inch by 9 inch viewing area in a compact 19 inch package. The VR14 requires only analog X and Y position information with an intensity pulse to generate sharp, bright point plot displays.

II. SOFTWARE

A. Manuals

1. VR14 Users Manual
2. PDP-12 Systems Reference Manual

B. Prints

1. VR14-Ø
2. VC12-Ø
3. EM12-Ø

C. Diagnostics

1. Display Test Maindec 12-D6BC
   (Maindec-12-D6BB could also be used)

* Acceptance Procedure consist of Section VI through Section X excluding VI-1, VI-10, and VI-10.

SIZE	CODE	NUMBER	REV
A	SP	VR14-0-5	B

DEC FORM NO 16-1022 DRA 108

A. Basic Mechanical Check

1. Check all knobs for position and tightness
2. All silk screening is correct and legible
3. All AC and high voltage is covered and labeled
4. Slides work correctly
5. Tube face and phosphor are not damaged
6. Serial number tag is present and correct
7. 110v, 220v labeling is correct
8. Cables are correct type and length
9. All decals are present and on straight
10. All switches operate smoothly
11. Module block is not cracked or broken
12. Deflection coil is properly adjusted and tightened
13. No chips or scratches on painted surfaces
14. All shrinkies are secure
15. No loose parts or filings on bottom of chassis
16. Check wire dress
17. Check for proper fan operation
18. High voltage connection on CRT is secure
19. All crimped terminations are mated and seated
20. Check for wiring touching power transistor cases

III. TEST EQUIPMENT

A. Off-Line Test

1. VOM

B. On-Line Test

1. VOM
2. Oscilloscope
3. EP12
4. EM12
5. TU56
6. TC12
7. TTY
8. VC12

C. Special Test Equipment

None Required

IV. OFF-LINE CHECKOUT PROCEDURE

CAUTION: The CRT is under high vacuum and is potentially in danger of explosion if subject to sharp blows or rough handling.

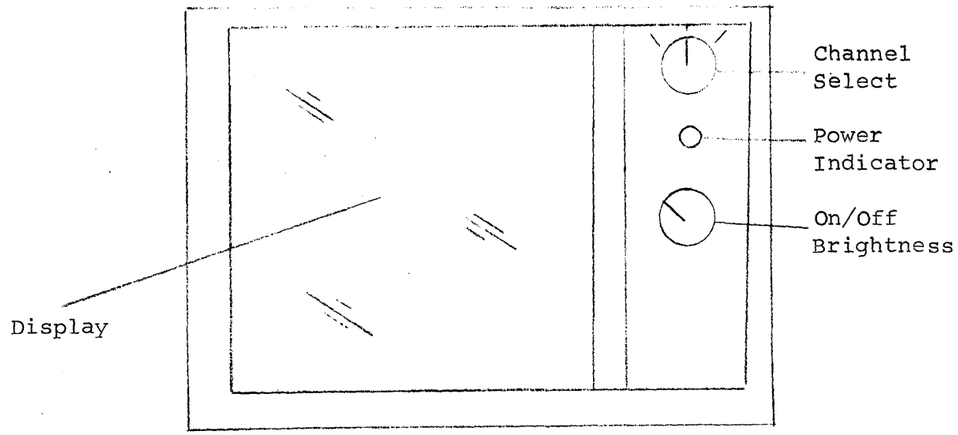

VR14 FRONT VIEW

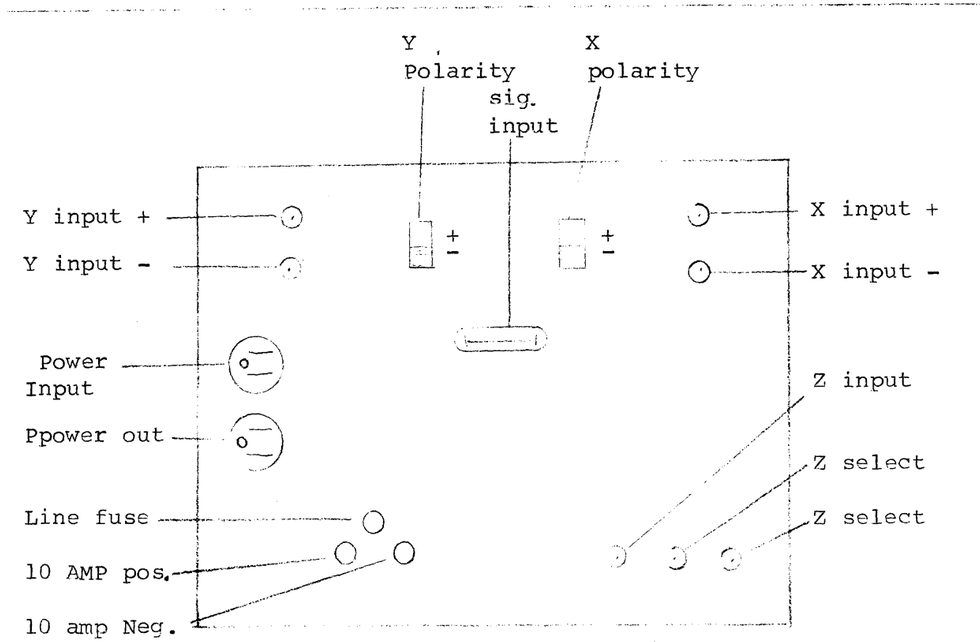

VR14 REAR VIEW

VR14 TOP VIEW

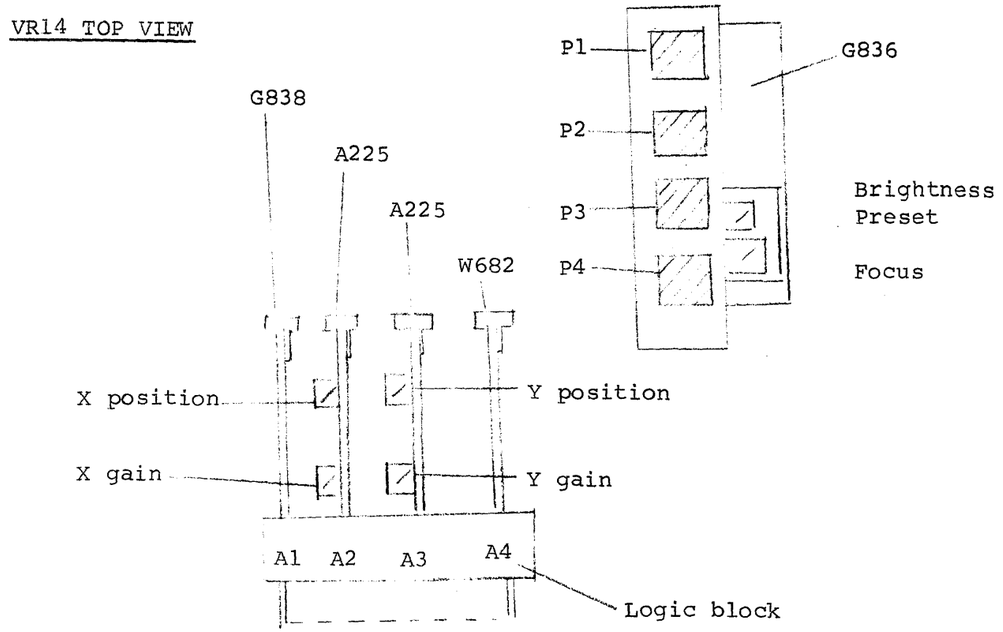

VR14 YOKE ADJUSTMENT

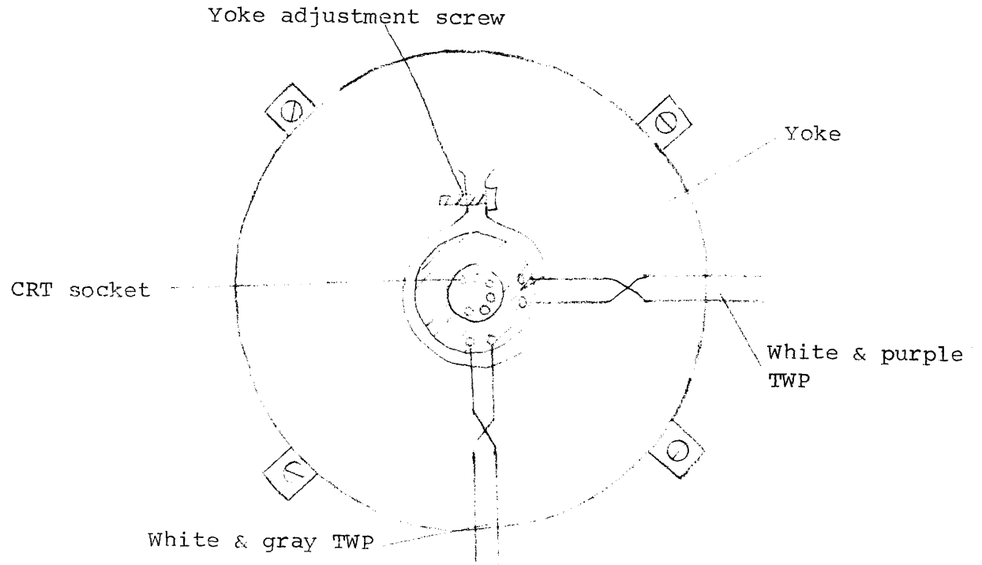

B. Basic Electrical Check

1. Remove the following modules from the VR14 under test.

   a. G838 Location - AØ1

   b. A225 Location - AØ2

   c. A225 Location - AØ3

   d. W682 Location - AØ4

2. Unplug the CRT socket from the CRT.

3. Check all fuses for proper value.

   a. F1 5 AMP Slow Blow (Line Fuse, 110v).

   b. F2 3 AMP Slow Blow (Line Fuse, 220v).

   c. F3 NEG 10 AMP

   d. F3 POS 10 AMP

4. Check the on-off brightness control and put it in the off position.

   NOTE: Check that the line voltage applied is the same as the voltage required by the unit under test.

5. Plug in AC line cord to the proper line voltage required.

DC VOLTAGE CHECKS

The next series of tests are voltage tests. The meter should be set up and connected to the test points first then power turned on for a minimum amount of time (1 to 3 seconds). It is very important that power be on only briefly because if a fault does exist damage to the unit can be avoided. Never leave power on even if correct voltage is observed because a fault may exist that will not be detected until a later test.

6. Perform the following voltage checks using the procedure outlined above.

   a. Perform voltage check number 1 of table 1.

   b. Perform voltage check number 2 of table 1.

   c. Perform voltage check number 3 of table 1.

   d. Perform voltage check number 4 of table 1.

   e. Plug in the W682 in location AØ4. Perform voltage check number 5 of table 1.

   f. Perform voltage check number 6 of table 1. Adjust the front panel brightness control through its full range.

ENGINEERING SPECIFICATION — CONTINUATION SHEET

TITLE

TEST	VOM SCALE	VOM RANGE	VOM + PROBE	VOM - PROBE	VOLTAGE	NOTES
7	DC	1200V	BØ4J	BØ1M	+350VDC TO -60VDC Tolerance = ±25VDC	ADJUST FOCUS CONTROL TO CHECK. (G836) CCW= -60VDC CW= +350VDC
8	AC	12V	CRT SOCKET PIN 1	CRT SOCKET PIN 12	6.3 VAC Tolerance = ± .3VAC	
9	DC	1200V	CRT SOCKET PIN 10	CHASSIS GND.	+350VDC Tolerance = ±25VDC	
10	DC	300V	CRT SOCKET PIN 2	CHASSIS GND.	-80VDC TO -20VDC Tolerance = +10V. THE -20VDC MAY BE 0.	ADJUST THE BRIGHTNESS CONTROL ON THE FRONT PANEL TO VARY THIS VOLTAGE.
11	DC	1200V	CRT SOCKET PIN 6	CHASSIS GND.	+350VDC TO -60VDC Tolerance = ±25VDC	ADJUST THE FOCUS CONTROL TO VARY THIS VOLTAGE. (G836) CCW= -60VDC CW= +350VDC
12	DC	60V	BØ1V	BØ1M	Nominal = +21.5V Tolerance = +2V, -1V.	THIS VOLTAGE SHOULD NOT EXCEED23.5VDC OR BE LESS THAN 20.5VDC.

SIZE A | CODE SP | NUMBER VR14-0-5 | RFV B | SHEET 10 OF 31

DEC FORM NO 16-1022
DRA 108

ENGINEERING SPECIFICATION — CONTINUATION SHEET

TITLE

TEST	VOM SCALE	VOM RANGE	VOM + PROBE	VOM - PROBE	VOLTAGE	NOTES
1	DC	60V	D1-4	CHASSIS GND.	+45VDC Tolerance = ±5V	D1-4 SHOULD HAVE AN ORANGE WIRE ON THIS TERMINAL.
2	DC	60V	CHASSIS GND.	D2-4	-45VDC Tolerance = ±5V	D2-4 SHOULD HAVE A GREEN WIRE ON THIS TERMINAL.
3	AC	12V	BØ4A	BØ4B	6.3VAC Tolerance = ± .3V	
4	DC	1200V	BØ4D	BØ1M	+350VDC Tolerance = ±25V	
5	DC	300V	CRT SOCKET, PIN 11	CHASSIS GND.	+60VDC Tolerance ±6V	PLUG IN THE W682 IN LOCATION AØ4.
6	DC	300V	BØ1M	BØ4F	-80VDC TO -20VDC Tolerance ±10V. The -20VDC COULD BE AS LOW AS 0.	ADJUST THE FRONT PANEL BRIGHTNESS CONTROL TO VARY THIS VOLTAGE.

SIZE A | CODE SP | NUMBER VR14-0-5 | RFV B | SHEET 9 OF 31

DEC FORM NO 16-1022
DRA 108

TABLE VR14-1

TEST	SCALE	VOM RANGE	+ PROBE	- PROBE	VOLTAGE	NOTES
13	DC	60V	BØ1M	BØ1R	Nominal = -21.5VDC Tolerance = -2V, +1V	THIS VOLTAGE SHOULD NOT EXCEED -23.5VDC OR BE LESS THAN -20.5VDC.
14	DC	12V	AØ2A	BØ1M	ØVDC	WITH THE A225 REMOVED FROM LOCATION AØ2 THIS VOLTAGE MUST BE ØVDC.
15	DC	12V	AØ3A	BØ1M	ØVDC	WITH THE A225 REMOVED FROM LOCATION AØ3 THIS VOLTAGE MUST BE ØVDC.
16	DC	12V	AØ4A	BØ1M	+5VDC (+4VDC MIN.) (+6VDC MAX.)	PLUG IN THE G838 LOCATION AØ1.
17	DC	12V	AØ2A	BØ1M	+2.6VDC TO -2.6VDC	A. PLUG IN THE A225 LOC. AØ2. B. ADJUST THE POSITION POT ON THE A225 IN LOC. AØ2.
18	DC	12V	BØ1M	AØ3A	+2.6VDC TO -2.6VDC	A. PLUG IN THE A225 LOC. AØ3. B. ADJUST THE POSITION POT ON THE A225 IN LOC. AØ3.

TABLE VR14-1

VOLTAGE CHART

All voltages measured with respect to ground

(chassis or BØ1M, N)

*Indicates voltage depends upon input signal

Circuit Block		
AØ2A	* ±3 volts nominal	X Current Sample
AØ3A	* ±3 volts nominal	Y Current Sample
AØ2E, B	*	X Input Signal
AØ3E, B	*	Y Input Signal
AØ1U, BØ1V	+21.5 VDC (red)	+ Regulated D.C.
AØ1K, BØ1R	-21.5 VDC (blue)	- Regulated D.C.
AØ1P	+5 VDC	For W682
BØ4A	3.5 VRMS	1/2 Filament
BØ4B	3.5 VRMS	1/2 Filament
BØ4D	+400 VDC	G2
BØ4F	0 to -80 VDC	Brightness (G1)
BØ4J	-80 VDC to -400 VDC	Focus
BØ4L	* +60 volts	Cathode With Negative Pulses
Brightness Pot		
Gray/Green	-80 VDC	

TABLE VR14-2

VOLTAGE CHART - (CONTINUED)

Deflection Heat Sink - P5

X AXIS	Y AXIS		
P5 - 2	P5 - 14	+20.5 VDC	PNP Base (2N4399)
P5 - 1	P5 - 15	+21.5 VDC	PNP Emitter (2N4399)
P5 - 3	P5 - 13	* <1 volt	All Collectors
P5 - 4	P5 - 12	-20.5 VDC	NPN Base (2N5302)
P5 - 5	P5 - 11	-21.5 VDC	NPN Emitter (2N5302)

Regulator Heat Sink - P3

P3 - 1	+43 VDC Orange	Emitters of 2N4399
P3 - 2	+42 VDC Gray/Yellow	Bases of 2N4399
P3 - 3	+21.5 VDC Red	Collectors of 2N4399
P3 - 12	-43 VDC Green	Emitters of 2N5302
P3 - 11	-42 VDC Gray/Blue	Bases of 2N5302
P3 - 10	-21.5 VDC Blue	Collectors of 2N5302

G836 Regulator Circuit Connectors -- P1, P2, P4

P1 - 1	+43 VDC	Raw + D.C.
P1 - 3, 6	Ground	
P1 - 4	-43 VDC	Raw - D.C.

TABLE VR14-2

VOLTAGE CHART - (CONTINUED)

P2 - 1	3.5 VRMS	1/2 Filament
P2 - 2, 4, 7, 9	Ground	
P2 - 3	3.5 VRMS	1/2 Filament
P2 - 5	70 VRMS (200 P-P)	±80 v. tap
P2 - 6	150 VRMS (400 P-P)	+400 v. tap
P4 - 1	+21.5 VDC Red	+ Regulated
P4 - 2, 14	Ground Black	
P4 - 3	+21.5 VDC Red	Hot + Sense
P4 - 4	0 VDC Black	Cold + Sense
P4 - 5	-80 to +400 VDC Gray/Red	Focus
P4 - 6	+400 VDC Orange	G2
P4 - 7	3.5 VRMS Brown	Filament
P4 - 8	3.5 VRMS Brown	Filament
P4 - 9	-80 VDC Gray/Green	To Brightness Pot
P4 - 10	0 to -40 VDC Gray/Violet	Brightness Preset
P4 - 11	+80 VDC Gray/Orange	For W682
P4 - 12	-21.5 VDC Blue	Hot - Sense
P4 - 13	0 VDC Black	Cold - Sense
P4 - 15	-21.5 VDC Blue	- Regulated

TABLE VR14-2

(1) OFF = OVDC

(2) FULLY CCW -80VDC

(3) FULLY CW = between 0 and -20VDC

g. Perform voltage check number 7 of table 1 and vary the focus control pot. Adjust this pot to its limits. Reset to approximately + 300 VDC after testing.

h. Make the following voltage checks at the CRT socket.

(1) No. 8 Table 1

(2) No. 9 Table 1

(3) No. 10 Table 1. Vary the brightness control on the front panel to insure proper operation.

(a) OFF OVDC

(b) FULLY CCW -80 VDC

(c) FULLY CW between 0 and -20VDC

(4) Perform check number 11 Table 1. Adjust the focus control on the G836 a minimum amount to insure that the focus control varies this voltage. Reset to +300 after test.

i. Perform voltage check number 12 of table 1.

j. Perform voltage check number 13 of table 1.

k. Perform voltage check number 14 of table 1.

l. Perform voltage check number 15 of table 1.

m. Plug in the G838 in location AØ1 and perform voltage check number 16 of table 1.

NOTE: On A225 voltage checks number 17 and number 18, shut off the VR14 immediately if the voltage exceeds +2.6VDC and cannot be turned down by the position trim pot.

n. Plug in the A225 in location AØ2 and perform voltage check number 17 of table 1. Adjust the position trim pot on the A225 to insure proper control of this voltage. After test position to +2.5VDC.

o. Plug in the A225 in location AØ3 and perform voltage check number 18 of table 1. Adjust position pot on the A225 to insure proper control of the voltage. After test position to +2.5VDC

p. The case temperature of the "X" deflection 2N4399 must be measured while the X deflection current is set for 5 amps (+2.5V at AØ2-A). No unit is to ship if the case is greater than 72°C.

q. Same test for "X" 2N5302 for X current at -5A (-2.5V at AØ2-A). Must be less than 72°C.

r. With AØ2-A and AØ3-A adjusted to +5A (+2.5V on both) measure the case temperature on the top 2N4399 of the power supply. Must be less than 72°C.

s. With AØ2-A, AØ3-A at -2.5V measure the top 2N5302 case temperature on the power supply heat sink. Must be less than 72°C.

V. BASIC ON-LINE TEST PROCEDURE

NOTE: Before applying power check that the power applied is the same as the voltage required by the VR14 under test.

A. Cabling

1. Install the BC12 Display cable from location F38 of the EM12 to the Display under test. (For extended scope output use F39 of the EM12.)

B. Basic Set-Up

1. Set-Up the M711 location CD37 as follows:

a. Intens - Negative

b. P.R.R. - Fast

c. Width - For cables less than 100' set to minimum, for cables over 100' set to maximum.

2. Check that the polarity switches located on the back of the VR14 are in the negative position (down).

3. Set the channel select control on the front panel to channel 1 and 2.

C. Basic On-line Checkout

1. Do not apply power to the VR14 under test at this point.

2. Load in the display diagnostic D6BC.

a. The following switches control this test.

(1) Setting Sense Switch -1 cause the display to freeze on the current test.

(2) Resetting Sense Switches to zero will cause the display to cycle thru the patterns listed below.

(a) Pattern 1 - Point Plotting (Box) Sense Sw Ø

(b) Pattern 2 - Character Generation Sense Sw 1

(c) Pattern 3 - Diagonal Lines Sense Sw 2

3. Start diagnostic D6BC and freeze on Pattern 3 (Diagonal lines). LINC mode/START 20.

4. Using an oscilloscope check the input to the X deflection Tp AØ2-E. This signal should be 6 volts in amplitude. From 0 to -6VDC.

5. Using an oscilloscope check the input to the Y deflection Tp AØ3E. This signal should be 6 volts in amplitude. From 0 to -6VDC.

a. Make sure no oscillations are present at AØ2A and AØ3A.

6. Depress STOP and I/O PRESET on the PDP-12 console.

7. Apply power to the VR14 under test.

8. Using a meter perform voltage check number 17 of table 1.

9. Using a meter perform voltage check number 18 of table 1.

10. Depress "START 20" on the PDP-12 console.

11. Select Sense Switch when pattern 1, a box, is displayed.

12. VR14 Alignment.

    a. Adjust the X position pot so that the left side of the box pattern aligns with the left side of plastic display mask. The display should be parallel and about ¼" from the mask at its closest point.

    b. Perform the above step for the Y position using the bottom edge of the display mask.

    c. Adjust the horizontal gain so the right side of the pattern aligns with the right edge of the plastic mask, witnin ¼" at its closest point.

    d. Adjust the vertical gain in the same manner as above for the top edge of the pattern.

    e. On the G836 adjust the brightness preset to prevent the scope display from blooming (when front brightness control is fully CCW).

    f. Adjust the yoke for horizontal and vertical alignment by loosening the adjustment screw and turning the yoke by hand while watching the display. When aligned, the box should be parallel to the mask on all edges. Tighten the alignment screw down securely.

    g. Reset Sense Switchs to zero. This will cause patterns to rotate when pattern 2 appears on the scope select sense switch. Pattern two will now freeze on the scope.

    h. Adjust the focus for sharp clear character display dots.

    i. Fine tune the brightness preset and focus control for a very clear display.

j. Using character test, select channel 1 using the front channel select knob - only channel 1 should be displayed. Repeat for channel 2 - only channel 2 should be displayed.

k. Reset the front panel channel select to 1 and 2.

13. Stop D6BC Diagnostic

14. Load in DIAL

a. LSW = 701

b. RSW = 7300

c. Line Mode

d. I/O Preset

e. Do

f. The tape will move then stop

g. Hit start 20

h. Program will load in

15. At this point there will be a number 1 displayed in the upper left corner of the display. There will also be a cursor pointing to the present line position.

16. Strike "E" on the TTY and repeat. This will cause a row of E's to be displayed on the VR14 under test. Continue to strike E until 3 rows of E's are displayed.

17. Observe the display for acceptable limits of ripple.

18. Strike rub out and repeat on the TTY until the cursor returns to its original starting position.

19. Strike line feed on the TTY. This will cause the cursor to move to the lower left corner of the display.

20. Type "DX, comma, carriage return," this will cause the directory of tape unit 0 to be displayed. Check the general quality of the display for acceptable limits.

21. Power down the VR14 and disconnect the line cord. Wire the unit for 230VAC input.

22. Power up the VR14 with 230VAC and check display quality with DISPTST.

23. If O.K. remove line cord and rewire for 115VAC.

24. Hit stop and I/O PRESET on the PDP-12 console.

25. With a Variac set the line to each unit to 90VAC and with no signal connected and A02-A, A03-A at approximately +2.2V (standard settings for PDP-12), turn on off switch on and off rapidly (within ½ sec) about 5 times while monitoring the voltage at A02-A. Leave power on after the fifth time. If A02-A does not return to its original value (about 2.2V), but instead goes away negative shut down and do not ship this unit. It has power-on latch up.

26. All VR14/20's must be vibrated horizontally, vertically, and on its back facing up thru the range 0-60 on the vibration table while displaying DISPTST. Any breaking up or disappearing of the picture is a reject and cannot be retested unless the intermittent cause is found and fixed.

27. All units must be tested in a heat tent which has an ambient temperature between 45 and 55° C. For 3 hours with A02-A, A03-A at +2.0V (not 2.5) and then 3 hours with A02-A, A03-A adjusted to -2.0V (not 2.5). Now run DISPTST for 3 hours under heat tent. After both heat tent tests the following measurements must be made to see if any power transistors have become "leaky".

A. Turn the position pots on X and Y deflection (A225) so that +2.5 volts is measured at AØ2-A and AØ3-A. This causes +5 amps to flow from both amplifiers and represents the worst case dissipation for the 2N4399 transistors in the power supply and deflection.

B. **Measure the case temperature of the 2N4399 in the X and Y and power supply. The case temperature a room ambient should never exceed 72 °C (161 °F).**

C. **While the 2N4399's are still at full load, the 2N5302's are all unloaded and should be measured for leakage. Measure AØ2L to AØ2K, this voltage should read less than .75 volts. Measure AØ3L to AØ3K and should read less than .75 volts. This same measurement can be made at the power supply regulator board by measuring less than .75 volts between pin 11 (blue gray) and pin 12 (green) P3.**

D. **Now that the 2N4399's have been run full load, the 2N5302's should be done. Turn the X and Y position pots so that -2.5 volts is measured at AØ2-A and AØ3-A. This loads fully all the 2N5302's.**

E. Measure the case temperatures of all 2N5302's. They should also be less than 72°C (161°F).

F. Now measure the 2N4399's (which should all be off). Measure less than .75 volts between AØ2-R and AØ2-T and also between AØ3-R and AØ3-T. On the power supply measure less than .75 volts between pin 2 (yellow gray) and pin 1 (orange) on P3.

G. After the test return the position setting to 0, 0 in X and Y.

H. If any of the measurements are above limits, the unit should never be shipped to anyone as it is a potential failure.

VI. ON-LINE TEST

1. Plug in the signal input cable from the PDP-12 to the VR14.

2. Load in display test D6CB.

3. Turn on power to the VR14 and PDP-12. (On/off brightness fully CW).

4. Set the channel select on the front of the VR14 to channel 1 and 2.

5. Start the display test, LINC mode, start 20.

6. Freeze the display on pattern 2, character display.

7. Check the displayed characters for acceptable quality.

8. Turn the brightness control on the front panel. CCW fully, (No intensity,)

10. Run the display in this configuration for 48 hours.

11. After completion of the 48 hour run make the following checks.

    a. Turn the front panel intensity control fully CW and check the quality of the displayed characters.

    b. Check the VR14 transformer for excessive heat.

12. Hit I/O PRESET and STOP on the PDP-12 console.

13. Make the following voltage checks (remove signal cable)

    a. Voltage check number 12 of table 1.

    b. Voltage check number 13 of table 1.

    c. Replace signal cable

14. Start the display test D68C (LINC mode, START 20).

15. Select Sense Switch while the display is running pattern 3.

16. Check pattern 3 for the quality of the display.

16A. Check the yoke alignment and adjust if required.

17. Resetting Sense Switchs to zero will cause the display test to rotate thru the patterns.

18. Select Sense Switch while the display is running pattern 1.

19. Check the quality of the display. (The box should extend to within ¼" of the edge of the usable display area at its closest point).

20. Check the yoke alignment and adjust if required.

21. Remove input signal and zero position on X & Y (AØ2A, AØ3A = ØV).

VII. MARGINAL TEST

None Required

VIII. VIBRATION TEST

1. Power up the VR14 and PDP-12.

2. Load and start display test D6CB (LINC, mode, START 20).

3. Vibrate the logic in accordance with specification SP-7665057-0-0. Observe the display for no malfunctions while vibrating the logic.

IX. ACCELERATED LIFE TEST

None Required

X. RELIABILITY TEST

None required

XI VR14 PRODUCTION CHECKLIST

VR14 Serial Number _____

Phosphor _____

Power Required _____

Table Top _____

Chassis Mount _____

	Tech	Date
1. Basic Mechanical Check IV. A1 - A20	_____	_____
2. Basic Electrical Check IV. B1 - B7	_____	_____

Test 1	+ _____ VDC			
Test 2	- _____ VDC			
Test 3	_____ VAC			
Test 4	+ _____ VDC			
Test 5	+ _____ VDC			
Test 6	- _____ VDC	to	- _____ VDC	
	- _____ VDC	to	_____ VDC	
Test 7	+ _____ VDC	to	- _____ VDC	
Test 8	_____ VAC			
Test 9	+ _____ VDC			
Test 10	- _____ VDC	to	- _____ VDC	
	- _____ VDC	to	_____ VDC	

Test 11 + _____ VDC to - _____ VDC

Test 12 + _____ VDC

Test 13 - _____ VDC

Test 14 _____ VDC

Test 15 _____ VDC

Test 16 + _____ VDC

Test 17 + _____ VDC to - _____ VDC

Test 18 + _____ VDC to - _____ VDC

B1 - P _____ •C

B1 - Q _____ •C

B1 - R _____ •C

B1 - S _____ •C

3. Basic On Line Test

A. M711 Set up

V. B1 _____ Intens

_____ P.R.R.

_____ Width

B. Input Signal

V. C4 _____ VDC

C5 _____ VDC

C5A _____ yes _____ no

If yes do not proceed until oscillation has been fixed.

C. Brightness Preset

V. C12,i _____

D. Channel Select

V. C12,J _____ Channel 1

_____ Channel 2

V. C12,K _____ Channel 1 and 2

E. V. C25 _____ yes _____ no

If yes do not ship unit.

F. V. C26 _____ O.K.

H. V. $C27_a$ - C27h

C27b + _____ VDC

C27c + _____ VDC

C27d + _____ VDC

C27f - _____ VDC

C27g - _____ VDC

C27h - _____ VDC

4. On Line Testing

A. 48 hour reliability

VI. 10 _____ OK

13A _____ VDC

13b _____ VDC

B. Yoke tightened Down

VI. 16A _____ OK

5. Vidration Test

VIII. 1 - 3 _____ OK

This drawing and specifications, herein, are the property of Digital Equipment Corporation and shall not be reproduced or copies or used in whole or in part as the basis for the manufacture or sale of items without written permission.

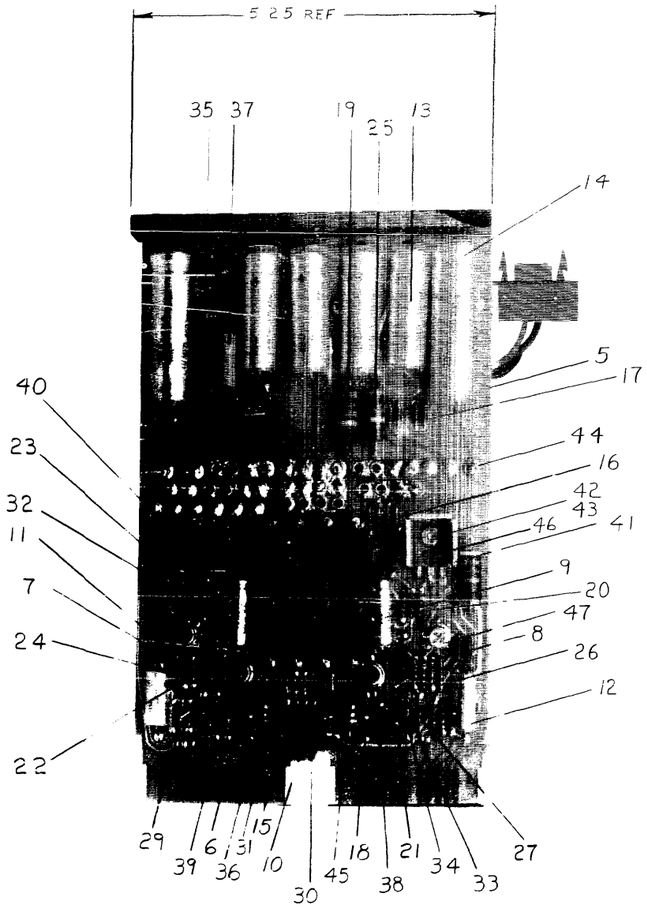

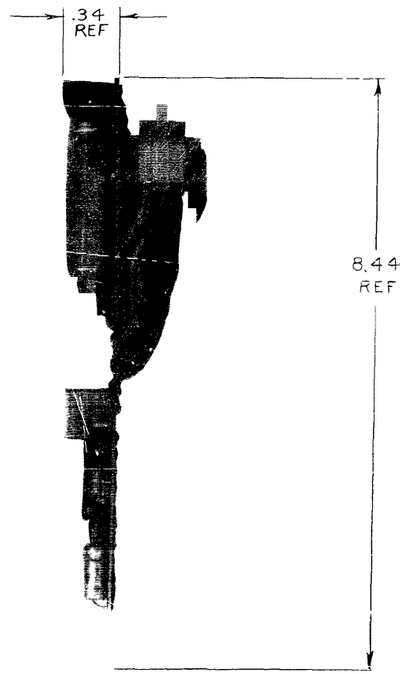

REVISIONS			
CHA	CHANGE NO	REV	
	ECO - 00006		
	RELEASED 11-8-71		
	A. FISHMAN		
	ECO - 00006		
	RELEASED 3/24/72		
	A. FISHMAN		
	ECO - 00006		
	RELEASED 3/29/72		
	A. FISHMAN		
	RELEASED 5/12/72		

FIRST USED ON OPTION/MODEL: VR14	QTY.	DESCRIPTION	PART NO.	ITEM NO.
		PARTS LIST		

UNLESS OTHERWISE SPECIFIED DIMENSION IN INCHES
TOLERANCES
DECIMALS: XXX ± .005, XX ± .02, X ± .1 — ANGLES: ±0° 30'
REMOVE BURRS AND BREAK SHARP CORNERS SURFACE QUALITY ✓

DRN. W. HOVEY	DATE 10/26/70	digital EQUIPMENT CORPORATION MAYNARD MASSACHUSETTS
CHK'D. D. CRABBE	DATE 11/2/70	
ENG. D. CRABBE	DATE 11/6/70	TITLE: G836 POWER REGULATOR BOARD ASSEMBLY
PROJ ENG. A. FISHMAN	DATE 11/6/70	
PROD. R. PETERSON	DATE 11/16/70	

MATERIAL —
FINISH —
NEXT HIGHER ASSY. —
SCALE —
SHEET 1 OF 1

SIZE	CODE	NUMBER	REV
D	UA	G836-0-0	E

DIST

SIZE D | CODE UA | NUMBER G836-0-0 | REV E

DIGITAL EQUIPMENT CORPORATION
MAYNARD, MASSACHUSETTS

PARTS LIST

MADE BY Mary Ann Gilbert | CHECKED | SECTION
DATE July 8, 1971 | DATE 7-14-71 9-11-61 |
ENG C Fishman | PROD | ISSUED SECT.
DATE 8-18-71 | DATE |

ITEM NO.	DWG NO. / PART NO.	DESCRIPTION	QUANTITY / VARIATION		
1	D-CS-G836-0-1	CIRCUIT SCHEMATIC			
2	K-CO-G836-0-4	X-Y COORDINATE HOLE LOCATION			
3	E-AH-G836-0-5	ASSY/DRILLING HOLE LAYOUT			
4	B-MH-G836-0-6	MODULE ECO HISTORY			
4½	D-UA-G836-0-0	POWER REGULATOR BOARD ASSEMBLY			
5	5009224	ETCHED CIRCUIT BOARD	1		
6	1000020	CAP. 180PF 100V 5% D.M.	1	C8	
7	1000024	CAP. 470PF 100V 5% DL.ML.	2	C4	10
8	1000042	CAP. 1000PF 100V 5% MICA	2	C5	20
9	1000080	CAP. 50UF 50V -10 +75% S.TANT	2	C6	11
10	1001610	CAP. .01UF 100V 20% DISC	2	C12	13
11	1001739	CAP. 27PF 100V 5% MICA	2	C3	9
12	1001886	CAP. 270UF 15V 10% S.TANT	2	C1	7
13	1002438	CAP. 25UF 150V 39D	4	C16	17, 18, 19
14	1002439	CAP. 10UF 450V 39D	2	C14	15
15	1100808	DIODE 1N752A 5.6V	6	D1	2, 5, 6, 7, 8
16	1100942	DIODE 1N4001	4	D13	14, 15, 16
17	1100796	DIODE 1N4004	6	D3	4, 9, 10, 11, 12
18	1300220	RES. 68 ½W 10%	2	R11	31
19	1300245	RES. 120 2W 10%	1	R37	
20	1300317	RES. 10 ¼W 5%	4	R10	27, 5, 21
21	1300285	RES. 270 ½W 5%	2	R8	25

TITLE	ASSY NO.	SIZE	CODE	NUMBER	REV.	ECO NO.
VR-14 POWER SUPPLY AND REGULATOR BOARD	SHEET 1 OF 3	A	PL	G836-0-0	E	00006
		DIST.				

DEC FORM NO. 16-1031
DRA 110

DIGITAL EQUIPMENT CORPORATION
MAYNARD, MASSACHUSETTS

PARTS LIST

MADE BY Mary Ann Gilbert | CHECKED | SECTION
DATE July 8, 1971 | DATE |
ENG C Fishman ACF | PROD | ISSUED SECT.
DATE 8-18-71 | DATE |

ITEM NO.	DWG NO. / PART NO.	DESCRIPTION	QUANTITY / VARIATION		
22	1300295	RES. 330 ¼W 5%	2	R4,	18
23	1300271	RES. 220 ¼W 5%	2	R9,	24
24	1300365	RES. 1K ¼W 5%	6	R7,	15, 16, 23, 29, 32
25	1300369	RES. 1K 2W 10%	1	R36	
26	1300391	RES. 1.5K ¼W 5%	2	R6,	22
27	1300417	RES. 2.2K ¼W 5%	2	R39,	40
~~28~~	~~1300317~~	~~RES. 10 ¼W 5%~~	~~2~~	~~R5,~~	~~21~~
29	1301890	RES. 560 ¼W 5%	2	R1,	20
30	1302385	RES. 750 1W 5%	2	R33,	34
31	~~1300820~~ 1310701	RES. 80 10W 1% WW	4	R12,	26, 41, 42
32	1303062	RES. 470 2W 5%	2	R14,	30
33	1302612	RES. 1.78K 1/8W 1% MF	2	R2,	17
34	1304870	RES. 6.81K 1/8W 1% MF	2	R3,	19
35	1310179	RES. 500K 1W 10% 78PR POT	1	R35	
36	1310382	RES. 2.7 1W 5%	2	R13,	28
37	1309143-14	RES. 100K 3/4W 10% 76PR POT	1	R38	
38	1501742	TRANSISTOR 2N2904	1	Q1	
39	1501891	TRANSISTOR DEC 2219	1	Q3	
40	1510556	TRANSISTOR MJE 2955	1	Q2	
41	~~4~~ 5509718	HEAT SINK REV A	2		
42	9006011	SCREW SLOTTED #4-40 x3/8 SST	2		
43	9006556	NUT HEX #4-40 SST	2		

TITLE	ASSY NO.	SIZE	CODE	NUMBER	REV.	ECO NO.
VR-14 POWER SUPPLY AND REGULATOR BOARD	SHEET 2 OF 3	A	PL	G836-0-0	E	00006
		DIST.				

DEC FORM NO. 16-1031
DRA 110

DIGITAL EQUIPMENT CORPORATION
MAYNARD, MASSACHUSETTS

PARTS LIST

MADE BY Mary Ann Gilbert DATE July 8, 1971	CHECKED DATE	SECTION
ENG A. Fishman DATE 10-11-71	PROD DATE	ISSUED SECT.

ITEM NO.	DWG NO./PART NO.	DESCRIPTION	QUANTITY/VARIATION											
44	9007836	EYELETS #GS4-3	41											
45	9008085	SOLDERLESS TERMINAL	8											
46	1510555	TRANSISTOR MJE 3055	1		Q4									
47	1909344	I.C. MC 1709 OP AMP	2		E1, 2									

TITLE	ASSY NO.	SIZE	CODE	NUMBER	REV.	ECO NO.
VR-14 POWER SUPPLY AND REGULATOR BOARD	SHEET 3 OF 3	A	PL	G836-0-0	E	00006
		DIST.				

DEC FORM NO. 16-1031
DRA 110

This drawing and specifications, herein, are the property of Digital Equipment Corporation and shall not be reproduced or copied or used in whole or in part as the basis for the manufacture or sale of items without written permission.

WIRE TABLE

ITEM NO.	DESCRIPTION AWG	COLOR	FROM CONNECTION	WITH	TO CONNECTION	WITH
1	14	ORN	BRADY M. #4	—	P1-1	4
1	18	GRY/YEL	5	—	P1-2	4
1	14	RED	6	—	P1-3	4
1	14	BLU	1	—	P1-10	4
1	18	GRY/BLU	2	—	P1-11	4
1	14	GRN	BRADY M. 3	—	P1-12	4

NOTES:
1. USE TIE WRAPS WHEREVER NECESSARY.

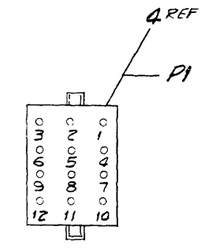

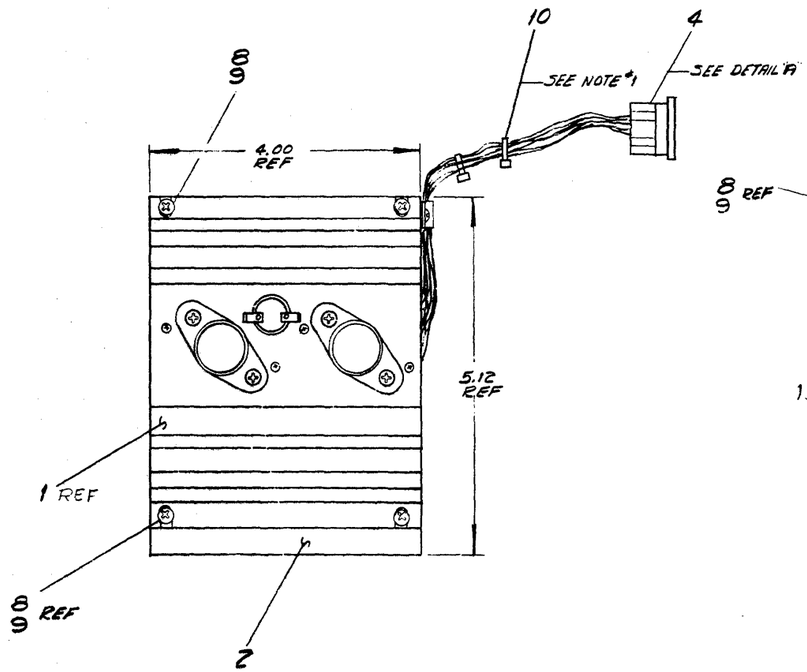

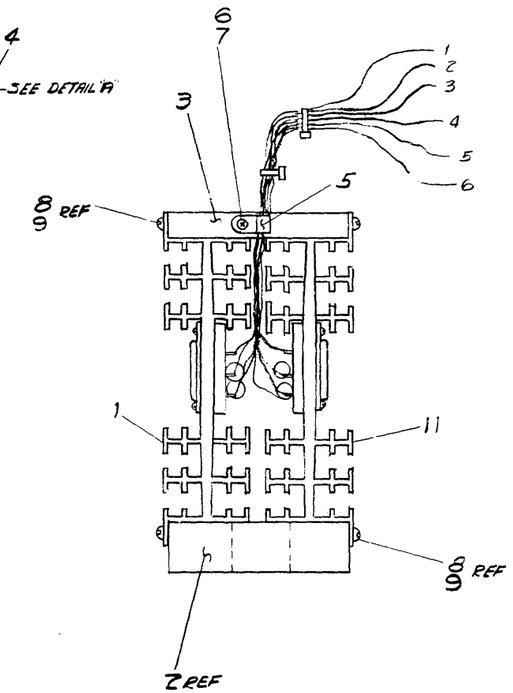

REVISIONS REV	CHANGE NO	CHK

FIRST USED ON OPTION/MODEL: VR14

DO NOT SCALE DRAWING
UNLESS OTHERWISE SPECIFIED
DIMENSION IN INCHES
TOLERANCES
DECIMALS ± .005 FRACTIONS ± 1/64 ANGLES ± 0°30'
FINAL SURFACE QUALITY
REMOVE BURRS AND BREAK SHARP CORNERS

MATERIAL —

FINISH —

QTY	DESCRIPTION	PART NO	ITEM NO

PARTS LIST

DRN		DATE 10-14-70
CHKD		DATE 10/21/70
ENG		DATE 10/21/70
PROJ ENG		DATE 11-4-70
PROD		DATE 11/21/70

NEXT HIGHER ASSY: D-VA-1R12-0-0

SCALE —

SHEET 1 OF 1

digital EQUIPMENT CORPORATION MAYNARD MASSACHUSETTS

TITLE: P.S HEAT SINK ASSY VR14

SIZE D | CODE AD | NUMBER 7007080-0-0 | REV

DIST

DEC FORM NO
SRD NO

DIGITAL EQUIPMENT CORPORATION
MAYNARD, MASSACHUSETTS

PARTS LIST

MADE BY J. Devin	CHECKED D. Crabbe	SECTION 1
DATE 10/14/70	DATE 10/15/70	
ENG D. L. Crabbe	PROD R. Peterson	ISSUED SECT. 1
DATE 11/6/70	DATE 11/6/70	

ITEM NO.	DWG NO./PART NO.	DESCRIPTION	QUANTITY/VARIATION
1	D-AD-7007081-1-0	REGULATOR HEAT SINK ASSY.	1
2	C-MD-7408437-0-0	BRKT, MTG. SPACER	1
3	C-MD-7408438-0-0	SPACER, MTG.	1
4	1209351-12	SOCKET HOUSING MATE-N-LOK	1
5	CPS-1953-4A	CLAMP NYLON ¼ I.D.	1
6	9006021-1	SCR, PHL HD PAN #6-32 x 5/16 LG	1
7	9006656	WASHER, FLAT #6 SST	1
8	9006020-1	SCR, PHL HD PAN #6-32 x ¼ LG SST	8
9	9006633	WASHER, INTERNAL #6-32 SST	8
10	9007031	TIE WRAPS SST-1B	2
11	D-AD-7007081-2-0	REGULATOR HEAT SINK ASSY.	1

TITLE	ASSY NO.	SIZE	CODE	NUMBER	REV.	ECO NO.
P.S. HEAT SINK ASSY.	D-AD-7007080-0-0	A	PL	7007080-0-0		
	SHEET 1 OF 1	DIST.				

DEC FORM NO.16-1031

This drawing and specifications, herein, are the property of Digital Equipment Corporation and shall not be reproduced or copied or used in whole or in part as the basis for the manufacture or sale of items without written permission.

WIRE TABLE

ITEM NO.	DESCRIPTION AWG	COLOR	FROM CONNECTION		WITH	TO CONNECTION	WITH
1	18	RED	BRADY M	1	—	P1-1	4
1		GRY/YEL		2	—	P1-2	4
1		GRY		3	—	P1-3	4
1		GRY/BLU		4	—	P1-4	4
1		BLU		5	—	P1-5	4
11		BLU		6	—	P1-11	4
11		GRY/BLU		7	—	P1-12	4
11		VIO		8	—	P1-13	4
11		GRY/YEL		9	—	P1-14	4
11	18	RED	BRADY M	10	—	P1-15	4

NOTES:
1. USE TIE-WRAPS WHEREVER NECESSARY.

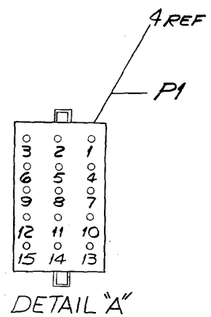

DETAIL "A"

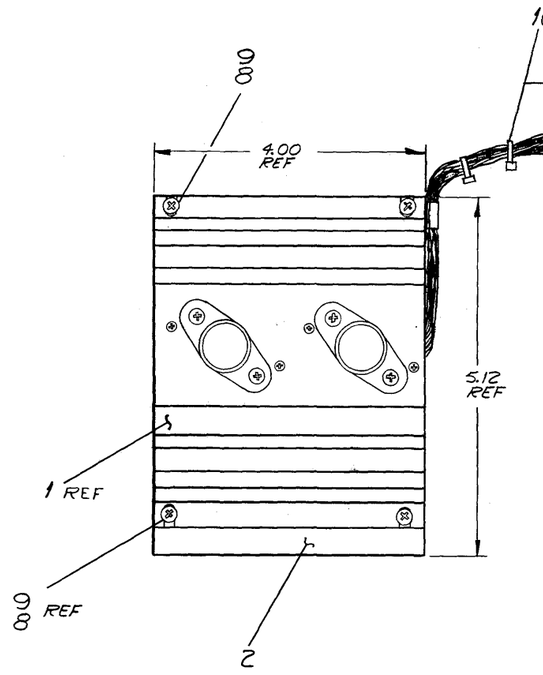

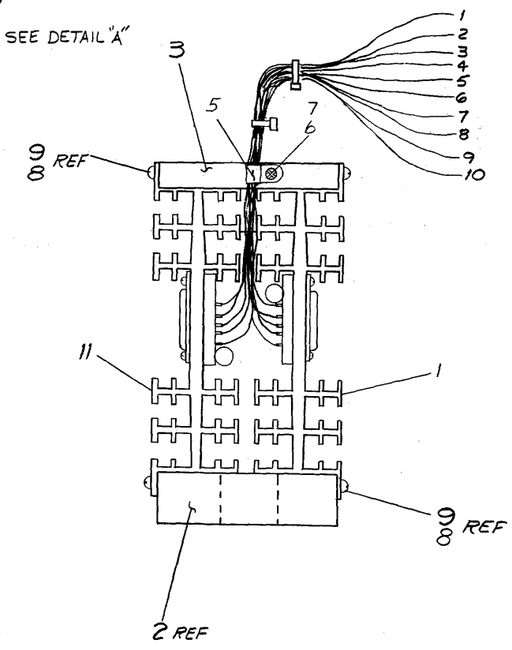

REVISIONS			
CHK	CHANGE NO	REV	
CR	VR14-3003	A	4-Jan-1991
FISHMAN			
CR	VR14-0015	B	3-Jan-1992
L.GALE			

FIRST USED ON OPTION/MODEL: VR14

DO NOT SCALE DRAWING
UNLESS OTHERWISE SPECIFIED
DIMENSION IN INCHES
TOLERANCES
DECIMALS ± FRACTIONS ± ANGLES ± 0°30'
FINAL SURFACE QUALITY
REMOVE BURRS AND BREAK SHARP CORNERS

MATERIAL —

FINISH —

PARTS LIST

QTY.	DESCRIPTION	PART NO.	ITEM NO.

DRN. R. Hanley	DATE 10/15/92	digital EQUIPMENT CORPORATION MAYNARD, MASSACHUSETTS
CHK'D. R. Gable	DATE 10/15/92	
ENG.	DATE	
PROJ. ENG.	DATE 11/4/92	
PROD.	DATE 11/5/92	

NEXT HIGHER ASSY: D-UA-VR14-0-0

SCALE —

SHEET 1 OF 1

TITLE: DEFLECTION HEAT SINK ASSY

SIZE	CODE	NUMBER	REV
D	AD	7007082-0-0	B

DIST.

DEC FORM NO. DRD 100

DIGITAL EQUIPMENT CORPORATION
MAYNARD, MASSACHUSETTS

PARTS LIST

MADE BY W. Hovey	CHECKED D.K. Crabbe	SECTION 1
DATE October 15, 1970	DATE Oct. 15, 1970	
ENG D.K. Crabbe	PROD R. Peterson	ISSUED SECT. 1
DATE 11/6/70	DATE 11/6/70	

ITEM NO.	DWG NO./PART NO.	DESCRIPTION	QUANTITY/VARIATION
1	D-AD-7007083-1-0	DEFLECTION POWER AMP. ASSY.	1
2	C-MD-7408437-0-0	BRKT, MTG. SPACER	1
3	C-MD-7408438-0-0	SPACER, MTG	1
4	1209351-15	SOCKET HOUSING MATE-N-LOK	1
5	CPS-1953-4A	CLAMP NYLON ¼ I.D.	1
6	9006021-1	SCR PHL HD PAN #6-32 x 5/16 LG	1
7	9006656	WASHER, FLAT #6 SST	1
8	9006020-1	SCR, PHL HD PAN #6-32 x ¼ LG SST	8
9	9006633	WASHER, INTERNAL #6-32 SST	8
10	9007031	TIE-WRAPS SST-1B	A/R
11	D-AD-7007083-2-0	DEFLECTION POWER AMP. ASSY.	1
~~12~~	~~1209351-03~~	~~SOCKET HSG (MATE-N-LOK)~~	~~1~~

TITLE DEFLECTION HEAT SINK ASSY.	ASSY NO. D-AD-7007082-0-0	SIZE A	CODE PL	NUMBER 7007082-0-0	REV. B	ECO NO. V514-00215
	SHEET 1 OF 1	DIST.				

DEC FORM NO.16-1031
DRA 110

This drawing and specifications, herein, are the property of Digital Equipment Corporation and shall not be reproduced or copied or used in whole or in part as the basis for the manufacture or sale of items without written permission. 1973

LEGEND	
NUMBER	VARIATION
7007084-1	115 VAC (50/60 HZ)
7007084-2	230 VAC (50/60 HZ)
7007084-3	100 VAC (50/60 HZ)
7007084-4	115 VAC (VR20)
7007084-5	230 VAC (VR20)
7007084-6	100 VAC (VR20)

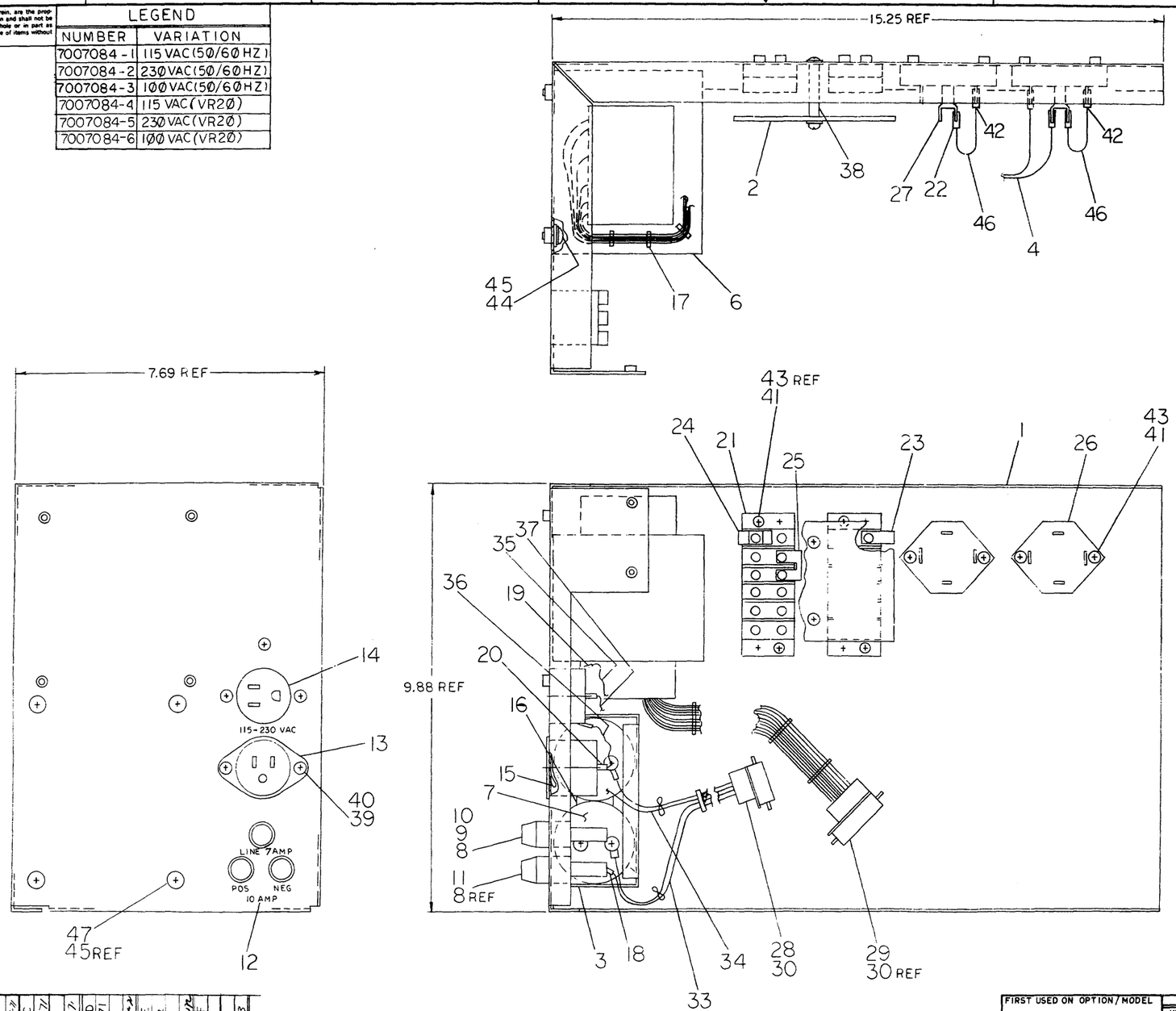

QTY.	DESCRIPTION	PART NO.	ITEM NO.
	PARTS LIST		

FIRST USED ON OPTION/MODEL: VR14

DO NOT SCALE DRAWING
UNLESS OTHERWISE SPECIFIED
DIMENSION IN INCHES
TOLERANCES
DECIMALS ±.005 FRACTIONS ±1/64 ANGLES ± 0°30'
FINAL SURFACE QUALITY
REMOVE BURRS AND BREAK SHARP CORNERS

MATERIAL
FINISH

DRN. D.K. Cobbe	DATE 10/20/70	digital EQUIPMENT CORPORATION MAYNARD MASSACHUSETTS
CHK'D.	DATE	
ENG. D.K. Cobbe	DATE 11/6/70	TITLE POWER SUPPLY ASSY (VR14)
PROJ. ENG. J. Fishman	DATE 11-6-70	
PROD. R. Peterson	DATE 11/11/70	
NEXT HIGHER ASSY D-UA-VR14-0-0		
SCALE NONE		SIZE D CODE AD NUMBER 7007084-0-0 REV. F
SHEET 1 OF 2		DIST. G

REVISIONS

CHK	CHANGE NO.	REV.
FV	VR14-00002	A
	A. FISHMAN 1-6-71	
	VR14-00010	B
	A. FISHMAN 1-15-71	
	VR14-00010	C
	FISHMAN 7-27-71	
	VR14-00014	D
	A. FISHMAN 11-2-71	
	VR14-00011	E
	A. FISHMAN 1-7-72	
	VR14-00022	F
	A. FISHMAN 1-16-73	

DEC FORM NO. DRD 100

This drawing and specifications, herein, are the property of Digital Equipment Corporation and shall not be reproduced or copied or used in whole or in part as the basis for the manufacture or sale of items without written permission. 1973

HARNESS TABLE

COLOR	HARN PL	P.S. LOCATION
RED	3	FAN2-1
WHT	4	FAN2-2
GRN	6	C2-NEG
GRN	7	C2-NEG
BLK	8	GND-1
RED	9	F1-2
WHT	10	PL2-T
ORN	11	C1-POS
ORN	12	C1-POS
RED	14	T1-2
WHT	15	T1-5
RED	16	T2-1
WHT	17	T2-5
GRN	22	D1-2
ORN	23	D1-1
GRN	25	D2-2
ORN	24	D2-1
RED	21	T2-1
WHT	20	T2-4
RED	19	T1-1
WHT	18	T2-4
BLK	30	GND-2 (ON H.V. ASSY)
RED	32	FAN1-1
WHT	31	FAN1-2

WIRE TABLE

ITEM NO.	WIRE COLOR	CONNECTIONS TYPE-ITEM	FROM	TO	TYPE-ITEM
46	BLU	22	D2-3	D2-4	22,27
46	BLU	22	D1-3	D1-4	22,27
35	RED	22,24	T1-2	T2-2	22,24
36	WHT	22,24	T1-6	T2-6	22,24
32	ORN	19	C1-POS	F3-1	*A,18
33	BLK	19	C1-NEG	P1-3	28,30
	ORN	*A,18	F3-2	P1-1	28,30
34	BLK	19	C2-POS	P1-6	28,30
	GRN	*A,18	F2-2	P1-4	28,30
31	GRN	*A,18	F2-1	C2-NEG	19
35	RED	*A,18	F1-2	PL2-B	20
35	RED	19	PL1-B	PL2-B	20
36	WHT	19	PL1-T	PL2-T	20
37	BLK	19	PL1-G	PL2-G	20
6	VIO	*A	TR-1	T2-6	22
6	GRY		TR-2	T2-3	22
6	WHT		TR-3	T2-2	22
6	BRN		TR-4	T1-6	22
6	RED		TR-5	T1-4	22
6	ORN		TR-6	T1-3	22
6	YEL		TR-7	P2-1	28,30
6	BLU		TR-8	D2-4	22,27
6	YEL-BLK		TR-9	P2-2	28,30
6	GRN		TR-10	P2-9	28,30
6	YEL		TR-11	P2-3	28,30
6	GRN		TR-12	P2-7	28,30
6	BLK		TR-13	P2-4	28,30
6	BLK-WHT		TR-14	P2-5	28,30
6	BLU		TR-15	D1-4	22,27
6	BLK-YEL	*A	TR-16	P2-6	28,30

*LETTER DESIGNATION "A" INDICATES WIRE IS TO BE SOLDERED PER TABLE ABOVE (WIRE TABLE)

JUMPER TABLE

ITEM NO.	FROM	TO
25	T1-7	T1-8
25	T1-8	T1-9
25	T1-11	T1-12
25	T2-7	T2-8
25	T2-10	T2-11
25	T2-11	T2-12

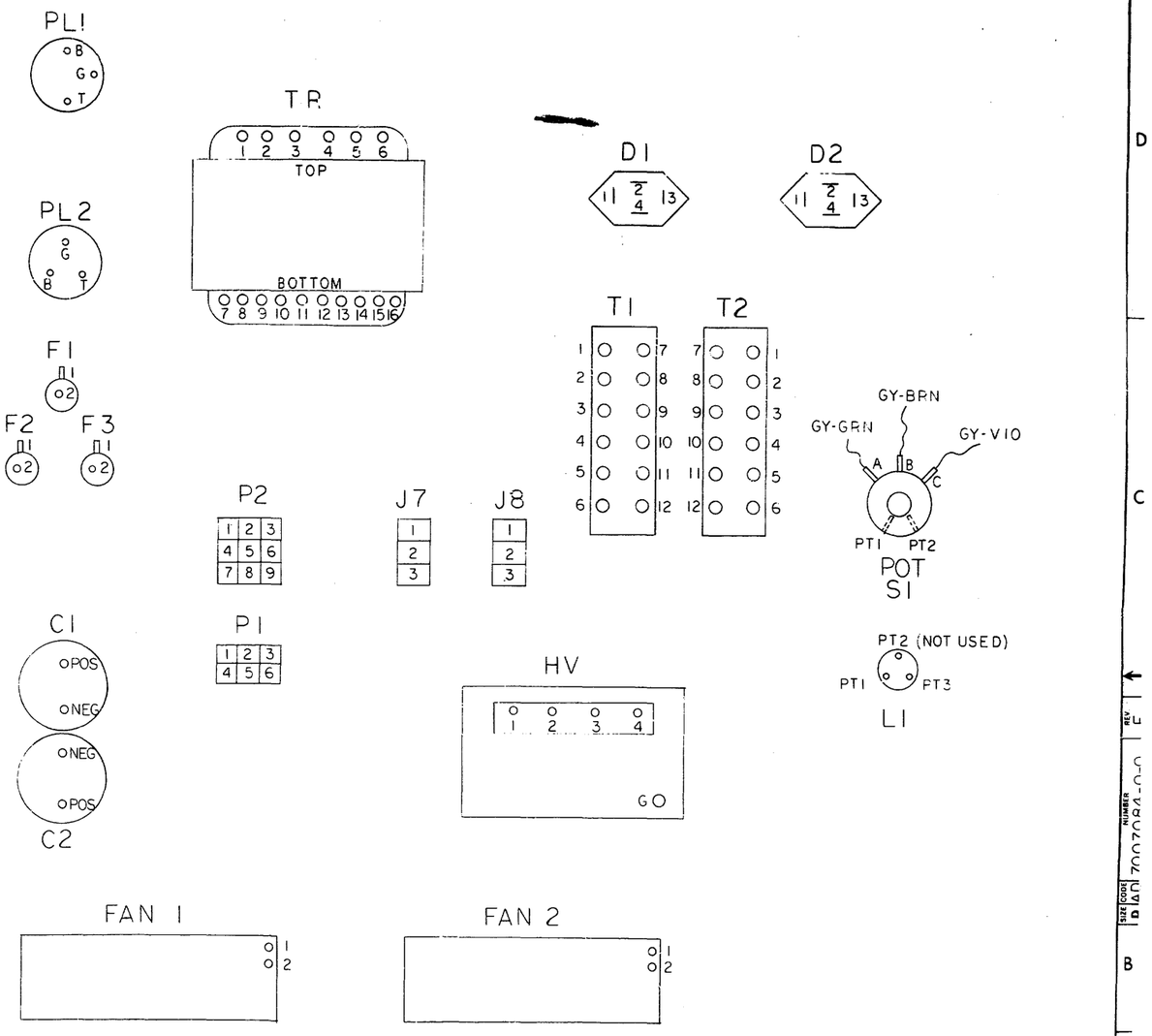

QTY.	DESCRIPTION	PART NO.	ITEM NO.

PARTS LIST

FIRST USED ON OPTION/MODEL: VR14	DO NOT SCALE DRAWING. UNLESS OTHERWISE SPECIFIED DIMENSION IN INCHES. TOLERANCES: DECIMALS ≤.005, FRACTIONS ≤1/64, ANGLES ± 0°30'. FINAL SURFACE QUALITY √. REMOVE BURRS AND BREAK SHARP CORNERS. MATERIAL —. FINISH —.	DRN D.F. Gabbe 10/15/70; CHK D.F. Gabbe 10/16/70; ENG D.F. Gabbe 11/6/70; PROJ. ENG. J.T. Inhuman 11-6-70; PROD. R. Peterson 11/11/70; NEXT HIGHER ASSY D-UA-VR14-0-0; SCALE NONE; SHEET 2 OF 2

digital EQUIPMENT CORPORATION MAYNARD, MASSACHUSETTS

TITLE: POWER SUPPLY ASSY (VR14)

SIZE D | CODE DAD | NUMBER 7007084-0-0 | REV. F | DIST. G

REVISIONS: REV. | CHANGE NO. | CHK

DEC FORM NO. DRD 100

DIGITAL EQUIPMENT CORPORATION
MAYNARD, MASSACHUSETTS

PARTS LIST

MADE BY D. Crabbe	CHECKED D. Crabbe	SECTION
DATE 10/9/70	DATE 10/22/70	1
ENG D.K. Crabbe	PROD R. Peterson	ISSUED SECT.
DATE 11/6/70	DATE 11/11/70	1

ITEM NO.	DWG NO./PART NO.	DESCRIPTION	QUANTITY/VARIATION 7007084-1	7007084-2	7007084-3	7007084-4	7007084-5	7007084-6
1	E-IA-7408402-0-0	PLATE, SIDE MTG.	1	1	1	1	1	1
2	B-MD-7408416-0-0	COVER, PROTECTION	1	1	1	-	-	-
3	D-IA-7408433-0-0	COVER, CAPACITOR HOLDDOWN	1	1	1	1	1	1
4	E-IA-7007147-0-0	POWER SUPPLY CABLE HARNESS	1	1	1	1	1	1
5	D-SC-7007084-0-1	POWER SUPPLY CIRCUIT SCHEMATIC	REF	REF	REF	REF	REF	REF
6	161016?-0	TRANSFORMER MMC-3833-1 MERRIMACK	1	1	1	1	1	1
7	101014?-0	CAPACITOR, 5900 MFD 75V SPRAGUE	2	2	2	2	2	2
8	900724?	FUSE HOLDER #HKP	3	3	3	3	3	3
9	900722?	7 AMP SLO BLO FUSE (115V)	1	-	1	1	-	1
10	900721?	3 AMP SLO BLO FUSE (230V)	-	1	-	-	1	-
11	900883?	10 AMP FAST BLO FUSE (230V)	2	2	2	2	2	2
12	A-DC-7408407-0-0	SCOTCHCALS (VR14)	A/R	A/R	A/R	A/R	A/R	A/R
13	120125?	RECEP #160-5 MALE AMPH.	1	1	1	1	1	1
14	120125?	RECEP #160-4 FEM AMPH.	1	1	1	1	1	1
15	900676?	TERMINAL #2101-06-00 SHAKE PROOF	1	1	1	1	1	1
16		FOAM ½ x 3/4 STICKY BACK 3M	A/R	A/R	A/R	A/R	A/R	A/R
17	900703?	TIE WRAP SST-1-B	A/R	A/R	A/R	A/R	A/R	A/R
18	910730?	SHRINKIES	A/R	A/R	A/R	A/R	A/R	A/R
19	900677?	SOLDERLESS CONN #31889 (RED) AMP	7	7	7	7	7	7
20	900678?	SOLDERLESS CONN #34144 (RED) AMP	4	4	4	4	4	4
21	9006904	TERM STRIP #6-541 CINCH JONES	2	2	2	2	2	2
22	9007917	FASTON TAB #50902 AMP	12	12	12	12	12	12

TITLE	ASSY NO.	SIZE	CODE	NUMBER	REV.	ECO NO.
POWER SUPPLY ASSY (VR14)	D-AD-7007084-0-0	A	PL	7007084-0-0	F	VR14-00022
	SHEET 1 OF 3	DIST.				

DIGITAL EQUIPMENT CORPORATION
MAYNARD, MASSACHUSETTS

PARTS LIST

MADE BY D. Crabbe	CHECKED D. Crabbe	SECTION
DATE 10/9/70	DATE 10/22/70	1
ENG D.K. Crabbe	PROD R. Peterson	ISSUED SECT.
DATE 11/6/70	DATE 11/11/70	1

ITEM NO.	DWG NO./PART NO.	DESCRIPTION	QUANTITY/VARIATION 7007084-1	7007084-2	7007084-3	7007084-4	7007084-5	7007084-6
23	9007112	FASTON TAB #60145-1 AMP	1	1	1	1	1	1
24	9007269	FASTON TAB # 41287-1 AMP	12	12	12	12	12	12
25	9007131	JUMPERS #541 CINCH JONES	6	6	6	6	6	6
26	1105799	DIODE PACK DM15 SOLARTRON	2	2	2	2	2	2
27	900792?	PIGGYBACK FASTONS #3000H21A ARKLESS	2	2	2	2	2	2
28	1209351-06	SOCKET HSG (MALE) #1480273-1 MATE-N-LOK	1	1	1	1	1	1
29	1209351-09	SOCKET HSG (MALE) #1480274-1 MATE-N-LOK	1	1	1	1	1	1
30	1209378-01	CONTACT PIN (MALE) MATE-N-LOK	12	12	12	12	12	12
31	9107370-55	#14GA TEF STRD INS WIRE (GRN)	A/R	A/R	A/R	A/R	A/R	A/R
32	9107370-33	#14GA TEF STRD INS WIRE (ORN)	↑	↑	↑	↑	↑	↑
33	9107440-03	#14GA TEF STRD INS TWP (BLK-ORN)						
34	9107440-05	#14GA TEF STRD INS TWP (BLK-GRN)						
35	9107360-22	#18GA TEF STRD INS WIRE (RED)						
36	9107360-99	#18GA TEF STRD INS WIRE (WHT)	↓	↓	↓	↓	↓	↓
37	9107360-00	#18GA TEF STRD INS WIRE (BLK)	A/R	A/R	A/R	A/R	A/R	A/R
38	9006864	SPACER, AL. #6-32 TAP ¼ AF x 1⅛	2	2	2	-	-	-
39	9006560	NUT, KEPS #6-32	4	4	4	4	4	4
40	900602?-1	SCR PHL PAN HD #6-32 x 5/16 SST	8	8	8	4	4	4
41	9006025-1	SCR PHL PAN HD #6-32 x 5/8 SST	4	4	4	4	4	4
42	9007919	FASTON TAP AMP	2	2	2	2	2	2
43	9006633	LOCK WASHER #6 INT TOOTH	12	12	12	8	8	8
44	9006070-1	SCR, PHL PAN HD #10-32 x 5/16 SST	8	8	8	8	8	8

TITLE	ASSY NO.	SIZE	CODE	NUMBER	REV.	ECO NO.
POWER SUPPLY ASSY (VR14)	D-AD-7007084-0-0	A	PL	7007084-0-0	F	

| | SHEET 2 OF 3 | DIST. | | | | |

DIGITAL EQUIPMENT CORPORATION
MAYNARD, MASSACHUSETTS

PARTS LIST

MADE BY	D. Crabbe	CHECKED	D. Crabbe	SECTION	1
DATE	10/9/70	DATE	10/22/70		
ENG	O.K. Crabbe	PROD	R. Peterson	ISSUED SECT.	1
DATE	11/6/70	DATE	11/11/70		

ITEM NO.	DWG NO./PART NO.	DESCRIPTION	QUANTITY/VARIATION											
			7007084-1	7007084-2	7007084-3	7007084-4	7007084-5	7007084-6						
45	9006635	LOCK WASHER #10 INT TOOTH	12	12	12	12	12	12						
46	9107370-66	# 14 AWG TEF STRDINS WIRE (BLUE)	A/R	A/R	A/R	A/R	A/R	A/R						
47	9007019-3	SCR, PHL TRUSS HD #10-32 X 5/16SST	4	4	4	4	4	4						

TITLE	ASSY NO.	SIZE	CODE	NUMBER	REV.	ECO NO.
POWER SUPPLY ASSY (VR14)	D-AD-7007084-0-0	A	PL	7007084-0-0	F	
	SHEET 3 OF 3	DIST.				

DEC FORM NO.16-1031
DRA 110

digital EQUIPMENT CORPORATION MAYNARD MASSACHUSETTS

DRAWING DIRECTORY

"THIS DRAWING AND SPECIFICATIONS, HEREIN, ARE THE PROPERTY OF DIGITAL EQUIPMENT CORPORATION AND SHALL NOT BE REPRODUCED OR COPIED OR USED IN WHOLE OR IN PART AS THE BASIS FOR THE MANUFACTURE OR SALE OF ITEMS WITHOUT WRITTEN PERMISSION. COPYRIGHT © 10/23/72, DIGITAL EQUIPMENT CORPORATION"

CUSTOMER PRINT SET INDEX

SEQUENCE		SEQUENCE	
COMPUTER ASSY (VT4Ø)	B-DD-VT4Ø-Ø		
16 BIT COMPUTER ASSY (11Ø5)	B-DD-11Ø5-Ø		
MODULE UTILIZATION	D-MU-VT4Ø-Ø-1		
BUS CONTROL	C-CS-M7Ø13-Ø-1		
ROM PATTERNS	D-RL-M7Ø13-Ø-8		
DISPLAY CONTROL	C-CS-M7Ø14-Ø-1		
ROM PATTERNS	D-RL-M7Ø14-Ø-8		
VECTOR GENERATOR	C-CS-A32Ø-Ø-1		
COMPUTER ASSY (VT4Ø)	A-PL-VT4Ø-Ø-Ø		

THIS IS PRINT SET ☐☐☐☐

UNIT VARIATIONS		PRINT SET			
VAR	TITLE	VT4Ø-Ø			
VT4Ø-AA	VT4Ø COMPUTER ASSY (115V,60HZ)	x			
VT4Ø-AB	VT4Ø COMPUTER ASSY (23ØV,50HZ)	x			
VT4Ø-BA	VT4Ø COMPUTER ASSY (115V,60HZ)	x			
VT4Ø-BB	VT4Ø COMPUTER ASSY (23ØV,50HZ)	x			

REVISIONS		
REV	CHG. NO.	DATE
A	VT4Ø-1	1-73

USED ON OPTION/MODEL		DRN.	DATE	TITLE
		C.MCCOY	10/16/2	VT4Ø COMPUTER ASSY
		CHK'D. D.C.Walker	DATE 10-22-72	
		PROJ ENG. H.E.Lawee	DATE 10/24/72	
		PROD. P.M.C Courtney	DATE 10/24/72	SIZE B · CODE DD · NUMBER VT4Ø-Ø · REV A
		FIELD SERV. T.B.O'Donnell	DATE 10/25/72	DIST 6

SHEET 1 OF 3

DRB 106
DEC 16-(325)-1062-1A-R972

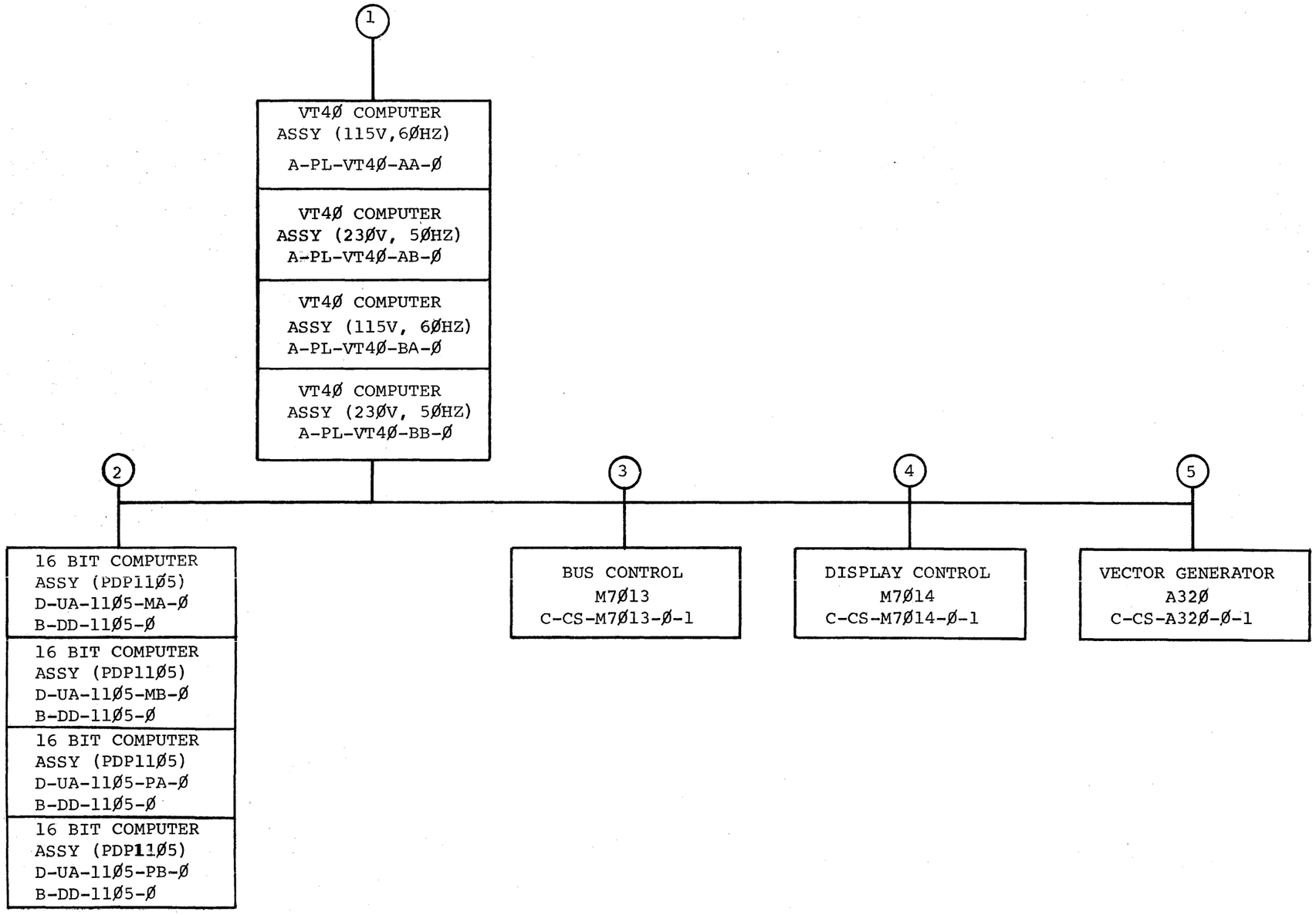

TITLE		SIZE	CODE	NUMBER	REV
VT4Ø COMPUTER ASSY	SHEET 2 OF 3	B	DD	VT4Ø-Ø	A

ELECTRICAL

CUSTOMER PRINT SET VT4Ø-Ø	MFG. SET	FIND NO.	DRAWING NO.	REV	NO OF SHT	DESCRIPTION	OPTION NO./FILE DATE
x		1	D-MU-VT4Ø-Ø-1		1	MODULE UTILIZATION	
x		3	C-CS-M7Ø13-Ø-1	#		BUS CONTROL (M7Ø13)	
C			D-RL-M7Ø13-Ø-8	#		ROM PATTERNS	
x		4	C-CS-M7Ø14-Ø-1	#		DISPLAY CONTROL	
C			D-RL-M7Ø14-Ø-8	#		ROM PATTERNS	
x		5	C-CS-A32Ø-Ø-1	#		VECTOR GENERATOR	

MECHANICAL

CUSTOMER PRINT SET VT4Ø-Ø	MFG SET	FIND NO	DRAWING NO.	REV	NO OF SHT	DESCRIPTION	OPTION NO./FILE DATE
X		1	A-PL-VT4Ø-Ø-Ø		1	VT4Ø COMPUTER ASSY	
			D-IA-7409966-0-0		1	COVER PANEL, REAR BOTTOM	
			D-MD-7409971-0-0		1	EXTRUSION, SIDE	
			A-PI-3700079-0-0		2	PACKAGING INSTRUCTIONS	
		2	D-UA-PDP11Ø5-Ø-Ø		3	16 BIT COMPUTER ASSY (PDP11Ø5)	
			A-PL-PDP11Ø5-Ø-Ø		4	16 BIT COMPUTER ASSY (PDP11Ø5)	
C			B-DD-11Ø5-Ø	#	6	16 BIT COMPUTER (PDP11Ø5)	11Ø5-1

CUSTOMER PRINT SET CODES	
	X = PRINT OF DOCUMENT INCLUDED IN PRINT SET
	C = INCLUDES ALL PRINTS INDICATED ON DOCUMENT
	S = CONFIDENTIAL AUTHORIZED SIGNATURE REQUIRED

TITLE		SIZE	CODE	NUMBER	REV
VT4Ø COMPUTER ASSY	SHEET 3 OF 3	B	DD	VT4Ø-Ø	A

DRB 108

digital EQUIPMENT CORPORATION MAYNARD, MASSACHUSETTS

DRAWING DIRECTORY

CUSTOMER PRINT SET INDEX

THIS IS PRINT SET

SEQUENCE	
16 BIT COMPUTER (PDP 11Ø5)	B-DD-11Ø5-Ø
16 BIT COMPUTER (PDP 11Ø5)	D-UA-11Ø5-Ø-Ø
16 BIT COMPUTER (PDP 11Ø5)(PL)	C-PL-11Ø5-Ø-Ø
MODULE UTILIZATION (16K)	D-MU-11Ø5-Ø-Ø2
MODULE UTILIZATION (8K)	D-MU-11Ø5-Ø-Ø1
CENTRAL PROCESSOR	B-DD-KD11-B
16 BIT 18 MIL MEMORY	B-DD-MM11-L
ETCH BOARD ASSY (11Ø5 CONSOLE)	E-IA-5409766-0-0
CIRCUIT SCHEMATIC	D-CS-5409766-0-1
REGULATOR BOARD	E-IA-5409728-0-0
CIRCUIT SCHEMATIC	D-CS-5409728-0-1
LINE SET BCØ5H	B-DD-BCØ5H-0
INPUT HARNESS (A.C.)	E-IA-7008713-0-0
HARNESS (D.C.)	D-IA-7008856-0-0
HEADER CABLE ASSY	D-IA-7008820-0-0
CIRCUIT SCHEMATIC	C-CS-5409949-0-1
CONSOLE ASSY	D-UA-KY11-J-0
CONSOLE ASSY (PL)	A-PL-KY11-J-0
I/O CABLE	C-UA-BCØ8R-Ø3-Ø
CIRCUIT SCHEMATIC (8K)	C-CS-5409818-Ø-1
ETCH/WIRE LIST (8K)	K-WL-7008843-1-1
CIRCUIT SCHEMATIC (16K)	C-CS-5410035-Ø-1
ETCH/WIRE LIST (16K)	K-WL-7008843-2-1
11Ø5 ACCESSORY LIST	A-AL-11Ø5-Ø-Ø4
11Ø5 SOFTWARE LIST	A-SL-11Ø5-Ø-Ø5
11Ø5 ACCEPTANCE PROCEDURE	A-SP-11Ø5-Ø-Ø6

UNIT VARIATIONS

VARIATION	TITLE	PRINT SET TYPE 11Ø5-1
	CONFIGURATION #1	
11Ø5-HA	KD11-B, MM11-K, 115V/60HZ	X
11Ø5-HB	KD11-B, MM11-K, 320V/50HZ	X
11Ø5-JA	KD11-B, MM11-L, 115V/60HZ	X
11Ø5-JB	KD11-B, MM11-L, 230V/50HZ	X
	CONFIGURATION #2	
11Ø5-KA	KD11-B, MM11-K, 115V/60HZ	X
11Ø5-KB	KD11-B, MM11-K, 230V/50HZ	X
11Ø5-LA	KD11-B, MM11-L, 115V/60HZ	X
11Ø5-LB	KD11-B, MM11-L, 230V/50HZ	X
	CONFIGURATION #3	
11Ø5-MA	KD11-B, MM11-K, 115V/60HZ	X
11Ø5-MB	KD11-B, MM11-K, 230V/50HZ	X
11Ø5-PA	KD11-B, MM11-L, 115V/60HZ	X
11Ø5-PB	KD11-B, MM11-L, 230V/50HZ	X

REVISIONS			
REV	CHG. NO.	DATE	
A	11Ø5-17	7-9.	
B	11Ø5-30	M.T.	
C	11Ø5-33	G.G	
D	11Ø5-34	10/72	
E	11Ø5-35	10/72	
F	11Ø5-37	12/72	
H	11Ø5-39	12/72	
J	11Ø5-40	12/72	
K	11Ø5-41	2/73	
L	KY11J-1	2/73	

USED ON OPTION/MODEL

DRN. J.CAHILL	DATE 4/13/72	TITLE 16 BIT COMPUTER (POP 11Ø5)
CHK'D. C.TESCHNER	DATE 4/19/72	
PROJ.ENG.	DATE 5-25-72	
PROD.	DATE	SIZE B / CODE DD / NUMBER 11Ø5-Ø / REV L
FIELD SERV.	DATE 5-25-72	
SHEET 1 OF 6		DIST

DRB 106

DEC 16-(325)-1062-1-N871

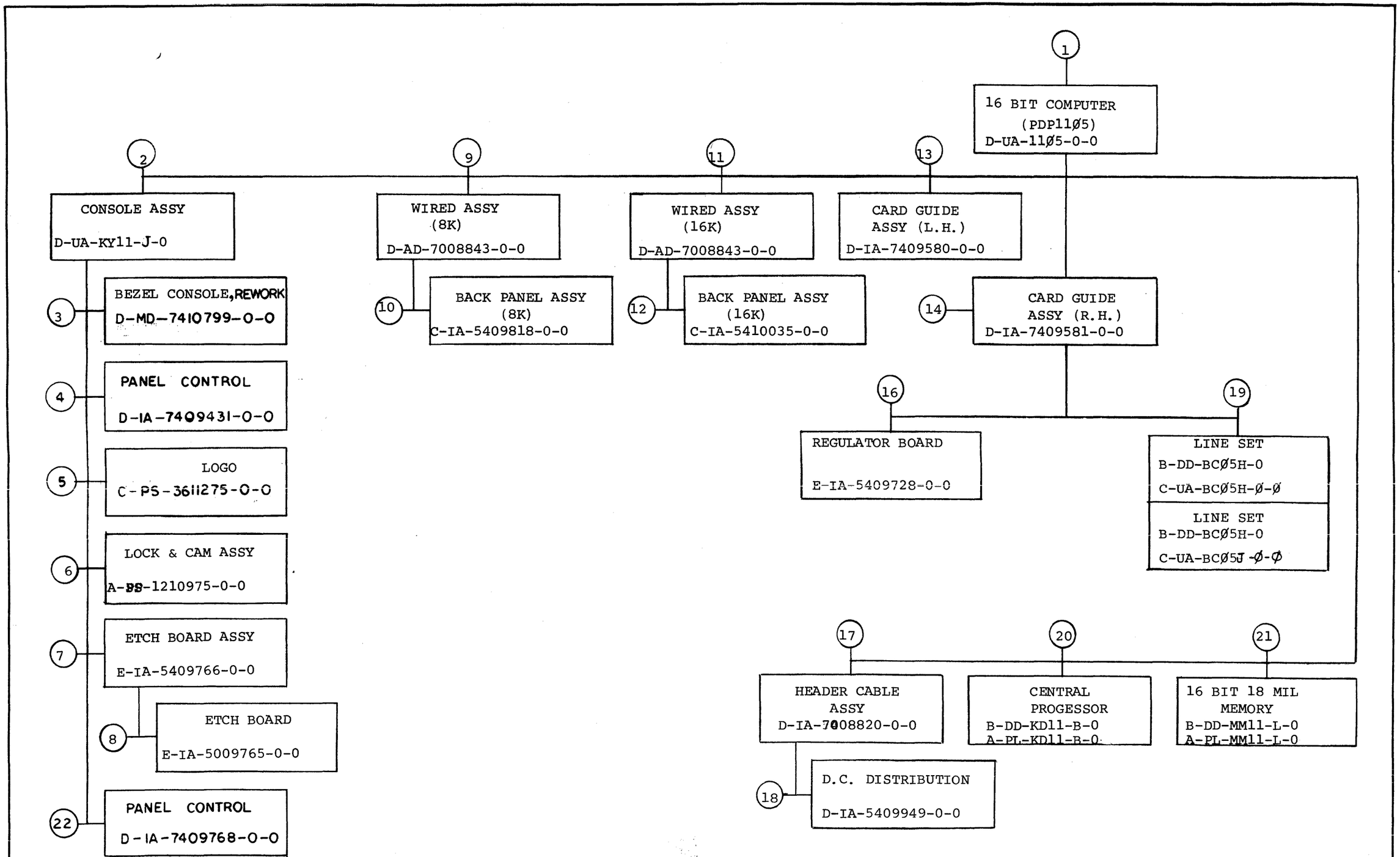

TITLE		SIZE	CODE	NUMBER	REV
16 BIT COMPUTER (PDP 11Ø5)	SHEET 2 OF 6	B	DD	11Ø5-Ø	L

CUSTOMER PRINT SET 11Ø5-Ø	MFG. SET	FIND NO.	DRAWING NO.	REV	NO OF SHT	DESCRIPTION	OPTION NO.
			ELECTRICAL				
X		1.	E-IA-7008713-Ø-Ø	#	1	AC INPUT HARNESS	
X			E-IA-7008856-Ø-Ø	#	1	HARNESS (D.C.)	
X			A-AL-11Ø5-Ø-04	*	1	11Ø5 ACCESSORY LIST	
X			A-SL-11Ø5-Ø-05	*	1	11Ø5 SOFTWARE LIST	
X			D-MU-11Ø5-Ø-01	*	1	MODULE UTILIZATION (8K)	
X			D-MU-11Ø5-Ø-02	*	1	MODULE UTILIZATION (16K)	
X			A-SP-11Ø5-Ø-6		23	1105 ACCEPTANCE PROCEDURE	
X		7.	E-IA-5409766-0-0	#	1	ETCH BOARD ASSY (11Ø5 CONSOLE)	
X			D-CS-5409766-0-1	#	1	CIRCUIT SCHEMATIC	
			B-MH-5409766-0-6	#	1	MODULE E.C.O. HISTORY	
		9.	D-AD-7008843-0-0	#	1	WIRED ASSY (8K)	
X			K-WL-7008843-1-1	#	1	ETCH/WIRE LIST (8K	
		10.	C-IA-5409818-0-0	#	1	BACK PANEL ASSY (8K)	
X			C-CS-5409818-0-1	#	2	CIRCUIT SCHEMATIC (8K)	
		11.	D-AD-7008843-0-Ø	#	1	WIRED ASSY (16K)	
X			K-WL-7008843-2-1	#	1	ETCH/WIRE LIST (16K)	
		12.	C-IA-5410035-0-0	#	1	BACK PANEL ASSY (16K)	
X			C-CS-5410035-0-1	#	2	CIRCUIT SHEMATIC (16K)	

CUSTOMER PRINT SET 11Ø5-Ø	MFG SET	FIND NO.	DRAWING NO.	REV	NO OF SHT	DESCRIPTION	OPTION NO.
			ELECTRICAL				
X		16	E-IA-5409728-Ø-Ø	#	1	REGULATOR BOARD	
X			D-GS-5409728-0-1	#	1	CIRCUIT SCHEMATIC	
			B-MH-5409728-0-6	#	1	MODULE E.C.O. HISTORY	
X		17.	D-IA-7008820-0-0	#	1	HEADER CABLE ASSY	
		18.	D-IA-5409949-0-0	#	1	D.C. DISTRIBUTION	
X			C-CS-5409949-0-1	#	1	CIRCUIT SCHEMATIC	
			B-MH-5409949-0-6	#	1	MODULE E.C.O. HISTORY	
C		19.	B-DD-BCØ5H-0	#	3	LINE SET	
			C-UA-BCØ5H-0-0	#	1	LINE SET BCØ5H (115V)	
			C-UA-BCØ5J-0-0	#	1	LINE SET BCØ5J (230V)	
C		20	B-DD-KD11-B	#	1	CENTRAL PROCESSOR	
			A-PL-KD11-B-0-0	#	1	CENTRAL PROCESSOR (PL)	
C		21	B-DD-MM11-L	#	3	16 BIT 18 MIL MEMORY	
			A-PL-MM11-L-0-0	#	1	16 BIT 18 MIL MEMORY (PL)	

TITLE	SHEET	SIZE	CODE	NUMBER	REV
16 BIT COMPUTER (PDP 11Ø5)	3 OF 6	B	DD	11Ø5-Ø	L

CUSTOMER PRINT SET 11Ø5-Ø	MFG. SET	FIND NO.	DRAWING NO.	REV	NO OF SHT	DESCRIPTION	OPTION NO./FILE DATE
			MECHANICAL				
X		1	D-UA-11Ø5-Ø-Ø	F	5	16 BIT (PDP 11Ø5) ASSY	
X			C-PL-11Ø5-Ø-Ø	F	2	16 BIT (PDP 11Ø5) ASSY (P.L.)	
			E-IA-7409458-0-0	#	4	CHASSIS	
			D-IA-7409453-0-0	#	1	FAN MOUNTING PLATE	
			A-DC-5309413-0-0	#	1	SPECIAL DECAL (UL)	
			D-PS-1210974-0-0	#	1	1.75 FILLER STRIP	
			C-IA-7409476-0-0	#	1	RET CONN BLOCK (L.H.)	
			C-IA-7409551-0-0	#	1	RET CONN BLOCK (R.H.)	
			D-IA-7409459-0-0	#	1	BRKT CHASSIS SLIDE (L.H.)	
			D-IA-7409533-0-0	#	1	COVER, SIDE	
			C-MD-7409460-0-0	#	1	COVER, TOP	
			C-IA-7409449-0-0	#	1	BRKT CHASSIS SLIDE (R.H.)	
			C-MD-7409591-0-0	#	1	CLAMP	
			C-PS-1210698-0-0	#	1	GUIDE, CARD CENTER	
			D-PS-1210931-0-0	#	1	BLOCK, CABLE RETAINER	
			D-MD-7409432-0-0	#	1	PLATE, LOWER RETAINER	
			C-MD-7409430-0-0	#	1	NUT, SWIVEL	
			C-MD-7409479-0-0	#	1	PLATE, PRESSURE	
			D-IA-7008856-0-0	#	1	HARNESS DC	
			E-IA-7008713-0-0	#	1	AC INPUT HARNESS	
			A-AL-11Ø5-Ø-Ø4	#	1	11Ø5 ACCESSORY LIST	
			A-SL-11Ø5-Ø-Ø5	#	1	11Ø5 SOFTWARE LIST	
			A-PI-3700061-0-0	#	2	PACKAGING INSTRUCTION	
			B-MD-7409817-0-0	#	1	PLATE, CABLE CLAMP	
			B-MD-7409816-0-0	#	1	SHIPPING BRACKET	
			C-MD-7409818-0-0	#	1	BRACKET, CABLE CLAMP	
			B-IA-7409729-0-0	#	1	JUMPER, POWER	
			D-PS-1210945-0-0	#	4	SLIDES	
			B-IA-7409903-0-0	#	1	JUMPER, POWER	
			D-IA-7409533-1-0	#	1	COVER, SIDE	
			E-IA-5309816-0-0	#	1	CHASSSIS POWER SUPPLY	
			D-IA-7008726-0-0	#	1	TRANSFORMER ASSY	
			A-DC-5309414-0-0	#	1	SPECIAL DECAL (UL)	
X		2	D-UA-KY11-J-Ø	#	1	CONSOLE ASSY	
X			A-PL-KY11-J-Ø	#	2	CONSOLE ASSY (P.L.)	
			C-MD-7409534-0-0	#	1	ACTUATOR (REWORK)	
			B-IA-7409444-0-0	#	1	DETENT	
X			C-UA-BCØ8R-Ø3-Ø	#	1	I/O CABLE	
			B-IA-7409730-0-0	#	1	JUMPER, POWER	
			B-MD-7409867-0-0	#	1	EXTENDED LEAF REWORK (ACTUATOR)	
			B-MD-7409868-0-0	#	1	SWITCH ADAPTER PLATE	
		3	D-MD-7410799-0-0	#	1	BEZEL CONSOLE, REWORK	
			J-PS-1210992-0-0	#	1	BEZEL CONSOLE, CASTING	

CUSTOMER PRINT SET 11Ø5-Ø	MFG SET	FIND NO.	DRAWING NO.	REV	NO OF SHT	DESCRIPTION	OPTION NO./FILE DATE
			MECHANICAL				
		4	D-IA-7409431-0-0	#	1	PANEL CONTROL	
			C-SS-7409431-0-1	#	1	SILK SCREEN (MAGENTA)	
			C-SS-7409431-0-2	#	1	SILK SCREEN (BLACK) REAR	
			C-SS-7409431-0-3	#	1	SILK SCREEN (11Ø5) VERMILLON	
		5	C-PS-3611275-0-0	#	1	LOGO	
			A-SS-3611275-0-1	#	1	SILK SCREEN	
			A-SS-3611275-0-2	#	1	SILK SCREEN	
			A-SS-3611275-0-3	#	1	SILK SCREEN	
			A-SS-3611275-0-4	#	1	SILK SCREEN	
			A-SS-3611275-0-5	#	1	SILK SCREEN	
		6	A-PS-1210975-0-0	#	1	LOCK & CAM ASSY	
		7	E-IA-5409766-0-0	#	1	ETCH BOARD ASSY (11Ø5 CONSOLE)	
			K-CO-5409766-0-4	#	1	X-Y CO-ORDINATION HOLE LOCATION	
			D-MD-7409270-2-0	#	1	BRACKET, SWITCHES	
			D-PS-1210786-0-0	#	1	KNOB	
			D-SC-1210795-0-0	#	1	L.E.D. HOLDER	
			D-PS-1210848		1	SINGLE L.E.D. HOLDER	
		8	E-IA-5009765-0-0	#	1	ETCH BOARD	
		9	D-AD-7008843-0-0	#	1	WIRED ASSY (8K)	
			D-MD-5010051-0-0	#	1	SHEET, PROTECTION	
		10	C-IA-5409818-0-0	#	1	BACK PANEL ASSY (8K)	
			D-AH-5409818-0-5	#	1	ASSY/DRILLING HOLE	
			K-CO-5409818-0-4	#	1	X-Y CO-ORDINATE HOLE LOCATION	
			C-MD-7409473-0-0	#	1	BRKT, CONN BLOCK BOTTOM	
			C-MD-7409475-0-0	#	1	BAR, RIGHT SUPPORT	
			D-MD-7409471-0-0	#	1	BRKT CONN BLOCK TOP	
			E-PS-1210258-0-0	#	1	288 PIN CONN (H863)	
			D-PS-1210834-0-0	#	1	360 PIN CONN	
			C-MD-7409474-0-0	#	1	BAR, LEFT SUPPORT	
			C-MD-7409472-0-0	#	1	MOUNTING BAR	
			C-PS-1210932-0-0	#	1	CONNECTOR GUIDE	

CUSTOMER PRINT SET CODES

X = PRINT OF DOCUMENT INCLUDED IN PRINT SET
C = INCLUDES ALL PRINTS INDICATED ON DOCUMENT
S = CONFIDENTIAL AUTHORIZED SIGNATURE REQUIRED

TITLE		SIZE	CODE	NUMBER	REV
16 BIT COMPUTER (PDP 11Ø5)	SHEET 4 OF 6	B	DD	11Ø5-Ø	L

DRB 108

DEC 16-(325)-1062-28-R972

CUSTOMER PRINT SET					SET	MECHANICAL					
1105-Ø					MFG.	FIND NO.	DRAWING NO.	REV	NO OF SHT	DESCRIPTION	OPTION NO.
						11.	D-AD-7008843-0-0	#	1	WIRED ASSY (16K)	
							D-MD-5010051-0-0	#	1	SHEET, PROTECTION	
						12.	C-IA-5410035-0-0	#	1	BACK PANEL ASSY (16K)	
							C-MD-7409473-0-0	#	1	BRKT CONN BLOCK BOTTOM	
							C-MD-7409475-0-0	#	1	BAR, RIGHT SUPPORT	
							C-MD-7409472-0-0	#	1	MOUNTING BAR	
							D-MD-7409471-0-0	#	1	BRKT CONN BLOCK TOP	
							D-PS-1210834-0-0	#	1	360 PIN CONN BLOCK	
							E-PS-1210258-0-0	#	1	288 PIN CONN (H 863)	
							D-AH-5410035-0-5	#	1	ASSY/DRILLING HOLE	
							K-CO-5410035-0-4	#	1	X-Y CO-ORDINATE HOLE LOCATION	
							C-PS-1210932-0-0	#	1	CONNECTOR GUIDE	
							C-MD-7409474-0-0	#	1	BAR, LEFT SUPPORT	
						13.	D-IA-7409580-0-0	#	1	CARD GUIDE ASSY (L.H.)	
							D-IA-7409566-0-0	#	1	SUPPORT, LEFT GUIDE	
							D-MD-7409553-0-0	#	1	CARD GUIDE (REWORK)	
						14.	D-IA-7409581-0-0	#	1	CARD GUIDE ASSY (R.H.)	
							D-IA-7409462-0-0	#	1	SUPPORT, RIGHT GUIDE	
							D-PS-1210700-0-0	#	1	GUIDE, CARD	

CUSTOMER PRINT SET					SET	MECHANICAL					
1105-Ø					MFG	FIND NO.	DRAWING NO.	REV	NO OF SHT	DESCRIPTION	OPTION NO.
							[illegible]			[illegible] ASSY	
							[illegible]			[illegible] ASSY (L.H.)	
							[illegible]			[illegible] ASSY	
						16	E-IA-5409728-0-0	#	1	REGULATOR BOARD	
							K-CO-5409728-0-4	#	1	X-Y CO-ORDINATE HOLE LAYOUT	
							C-MD-5309779-0-0	#	1	CONTACT COMMON CAPACITOR	
							C-MD-5309781-0-0	#	1	CONTACT CAPACITOR	
							C-IA-53010126-0-0	#	1	HOLDER CAPACITOR	
							C-MD-5309942-0-0	#	1	SCR HOLDER	
							D-PS-1210596-0-0	#	1	HEAT SINK	
						17.	D-IA-7008820-0-0	#	1	HEADER CABLE ASSY	
						18	D-IA-5409949-0-0	#	1	D.C. DISTRIBUTION	
							K-CO-5409949-0-4	#	1	X-Y CO-ORDINATE HOLE LOCATION	
							D-AH-5409949-0-5	#	1	ASSY/DRILLING HOLE LAYOUT	
					C	19	B-DD-BCØ5H-0	#	3	LINE SET	
							C-UA-BCØ5H-Ø-Ø	#	1	LINE SET BCØ5H (115)	
							C-UA-BCØ5J-Ø-Ø	#	1	LINE SET BCØ5J (230)	

TITLE		SIZE	CODE	NUMBER	REV
16 BIT COMPUTER (PDP11Ø5)	SHEET 5 OF 6	B	DD	11Ø5-Ø	L

CUSTOMER PRINT SET	MFG. SET	MECHANICAL					
1105		FIND NO.	DRAWING NO.	REV	NO OF SHT	DESCRIPTION	OPTION NO.
		20.	B-DD-KD11-B	#	1	CENTRAL PROCESSOR	
			A-PL-KD11-B-0-0	#	1	CENTRAL PROCESSOR (PL)	
		21.	B-DD-MM11-L	#	3	16 BIT 18 MIL MEMORY	
			A-PL-MM11-L-0-0	#	1	16 BIT 18 MIL MEMORY (PL)	
		22.	D-IA-7409768-0-0	#	1	PANEL, CONTROL	
			C-SS-7409768-0-1	#	1	SILK SCREEN	
			C-SS-7409768-0-2	#	1	SILK SCREEN	
			C-SS-7409768-0-3	#	1	SILK SCREEN	

CUSTOMER PRINT SET	MFG SET						
		FIND NO.	DRAWING NO.	REV	NO OF SHT	DESCRIPTION	OPTION NO.

TITLE		SIZE	CODE	NUMBER	REV
16 BIT COMPUTER (PDP11Ø5)	SHEET 6 OF 6	B	DD	11Ø5-Ø	L

This drawing and specifications, herein, are the property of Digital Equipment Corporation and shall not be reproduced or copied or used in whole or in part as the basis for the manufacture or sale of items without written permission. JTZ

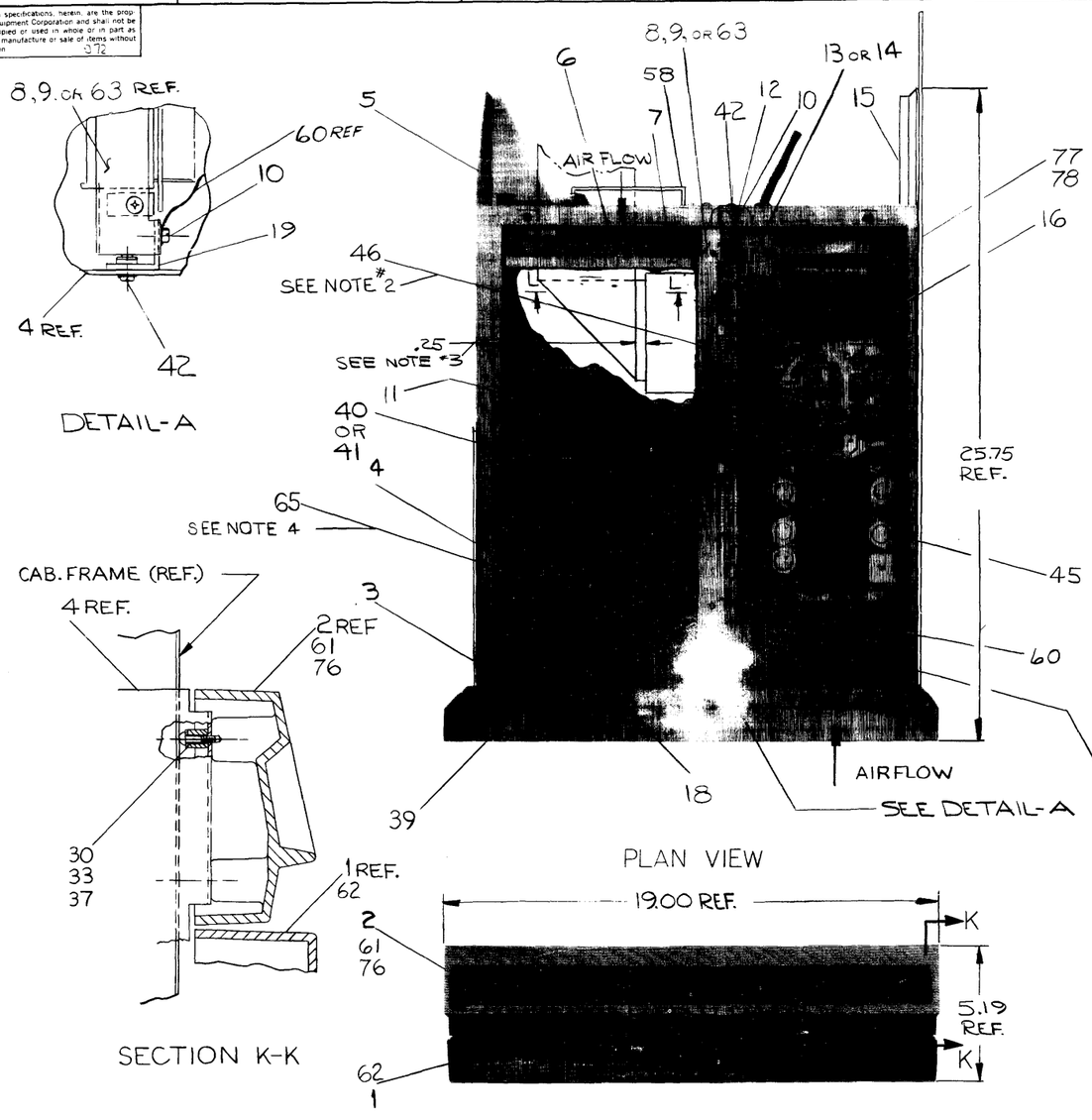

WIRE TABLE

PART NO.	COLOR	FROM HARNESS LEAD NO.	TO SYSTEM LOCATION	REMARKS
7008713	RED	J1	51-2	VIEW E-E
	RED	J2	51-1	
	VIO	J3	51-6	
	BLK	J4	51-5	
	RED	J12	H740 P.S. J3	THERMAL INTERLOCK
	RED	J11	H740 FAN	P.S. FAN TAB
	WHT	J10	H740 FAN	P.S. FAN TAB
		J6	P9	BACK OF CHASSIS
		J5	P8	BACK OF CHASSIS
		J9	TRANSFORMER P5	VIEW H-H
		P1	A.C. INPUT BOX J13	A.C. INPUT BOX
	RED	J7	11/05 FAN	CHASSIS FAN
7008713	WHT	J8	11/05 FAN	CHASSIS FAN
7008856		P1	H740 P.S. J2	P.S. MATE-N-LOCK
	VIO	8	BP-1	VIEW F-F
	RED	9	BP-3	
	YEL	10	BP-2	
	BLK	11	BP-4	
	BLU	12	BP-5	
	ORN	13	LOGIC POINT C8(W)	+15
	BRN	14	LOGIC POINT C8(R)	L+C LO
	BLK	15	BP-6	
7008856	RED	16	BP-7	VIEW F-F
		TRANSFORMER P2	H740 P/S J1	VIEW H-H & POWER CARD TO TRANSFORMER
7409729-2	RED	B.P.-7	CONSOLE-+5	CONSOLE TO BACK PLANE & VIEW D-D
7409729-1	BLK	B.P.-6	CONSOLE-GND	CONSOLE TO BACK PLANE & VIEW D-D
7409903	BLK	B.P.-6	BACK PLANE-GND	BACK PLANE TO CHASSIS-DETAIL-A

NOTES:

1. INSTALLATION OF I/Ø CABLE, WHICH IS ALREADY CONNECTED TO ITEM #(2), CONSOLE ASSY, IS AS FOLLOWS. RUN I/Ø CABLE DOWN INNER SIDE OF ITEM #(18) CARD GUIDE ASSY SLIDE CABLE THROUGH OPENING ON BOTTOM OF ITEM #(18) CARD GUIDE ASSY, TO ONE OF THE THREE EXIT LOCATIONS FOR THE CABLE, AFTER EXIT LOCATION IS DECIDED, FOLD CABLE 90° AND HOLD IN PLACE BY USING ITEM # 35 (CLAMP) AND ITEM #46 (TAPE) AS SHOWN IN VIEW C-C.
2. USE TAPE (ITEM #46) TO HOLD HEADER CABLE ASSY TO CHASSIS.
3. FOLD CABLE 90° AS SHOWN TO INSURE CORRECT LOCATION IN CABLE CLAMP.
4. ITEM #65 (ELECTROMAGNETIC SHIELD) GOES BETWEEN CENTRAL PROCESSOR BOARDS & MEMORY BOARDS.
5. THE 6 PIN MATE-N-LOCK CONN (MALE) ON TRANSFORMER (ITEM #67) IS TO REMAIN ON FLOOR OF CHASSIS.
6. CONNECT 3 PIN-MATE-N LOCK CONN. (FEMALE) ON TRANSFORMER (ITEM # 67) TO 3 PIN MATE-N-LOCK CONN. (MALE) ON REGULATOR BOARD (ITEM # 75) (SECTION P-P).
7. 2 PIN MATE-N-LOCK TO BE SECURED TO HEAT SINK FOR HANDLING.

REV	DESCRIPTION	CHK	ENG NO	DATE
A	Initial release		11/05-0 0317	11-27-72
B	Update to ECO 0330		11/05-0 0330	12-6-72
C	Update to ECO A34		11/05-0 A34	1-05-73
D	Update to ECO 0035		11/05-C 0035	2-21-73
E	Update to ECO 0039		11/5- 0039	4-5-73
F	Update to ECO 0040		11/05-C 0040	4-12-73
G	Update to ECO 041		11/05-0 041	5-8-73

FIRST USED ON OPTION/MODEL	QTY.	DESCRIPTION	PART NO.	ITEM NO.
PDP 1105		PARTS LIST		

UNLESS OTHERWISE SPECIFIED DIMENSION IN INCHES. TOLERANCES
DECIMALS: XXX ± .005, XX ± .02, X ± 1. ANGLES: ± 0° 30'
REMOVE BURRS AND BREAK SHARP CORNERS SURFACE QUALITY ✓
MATERIAL
FINISH

DRN. DATE 2-24-72
CHK'D E. Teschner DATE 4-19-72
ENG. Alan Lyons DATE 5-15-72
PROJ. ENG. DATE
PROD. DATE 5/16/72
NEXT HIGHER ASSY. B-DD-1105-Ø
SCALE NONE
SHEET 1 OF 5

digital EQUIPMENT CORPORATION MAYNARD MASSACHUSETTS

TITLE: 16 BIT COMPUTER ASSY (PDP 1105)

SIZE D | CODE UA | NUMBER 1105-Ø-Ø | REV.
DIST.

REV H | SIZE D | CODE UA | NUMBER 1105-Ø-Ø

This drawing and specifications, herein, are the property of Digital Equipment Corporation and shall not be reproduced or copied or used in whole or in part as the basis for the manufacture or sale of items without written permission. 1972

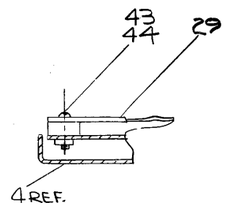

SECTION J-J

REAR VIEW

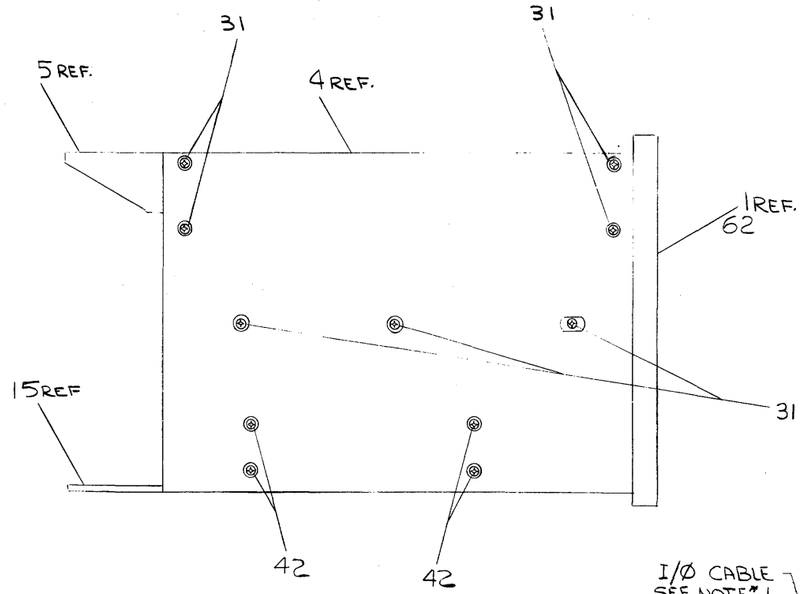

VIEW B-B

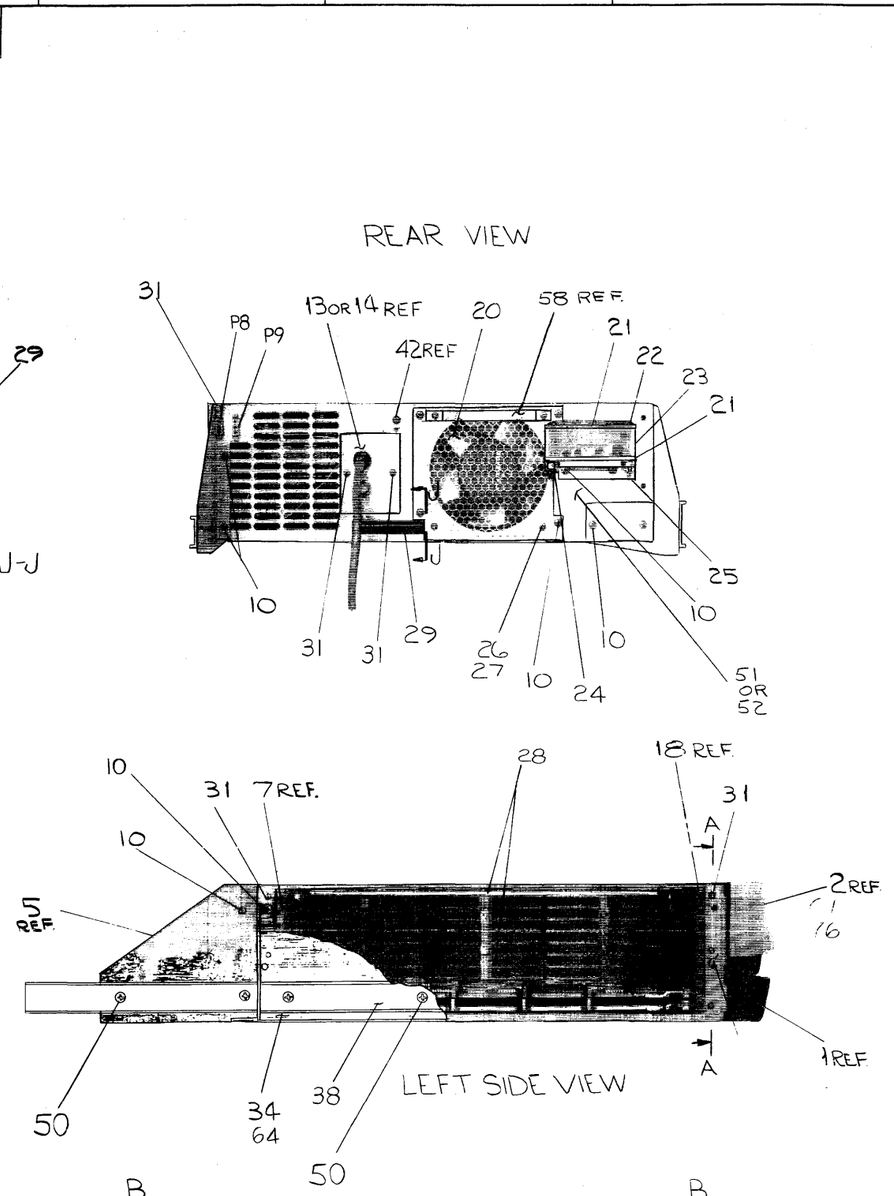

LEFT SIDE VIEW

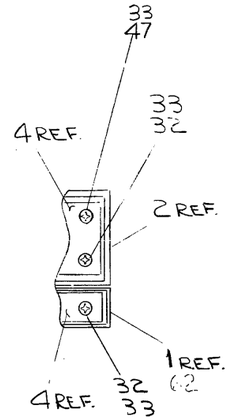

VIEW A-A

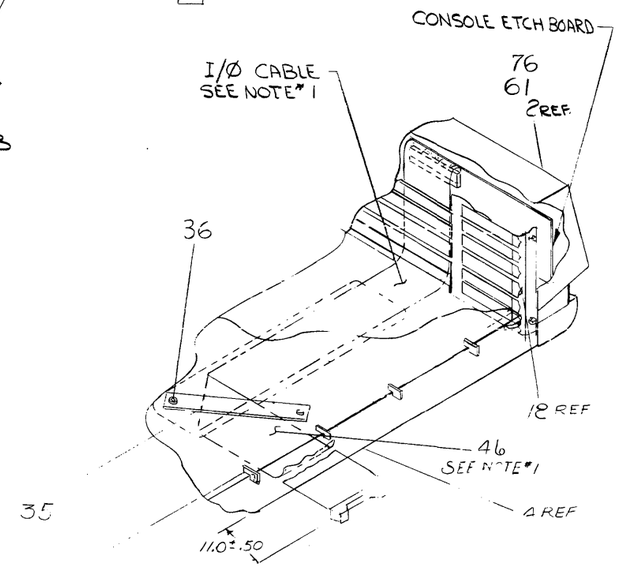

— MODULE HANDLE

VIEW C-C

B

— SEE VIEW C-C

FIRST USED ON OPTION/MODEL: PDP 11Ø5	QTY.	DESCRIPTION	PART NO. / ITEM NO.
		PARTS LIST	
UNLESS OTHERWISE SPECIFIED DIMENSION IN INCHES. TOLERANCES: DECIMALS XXX .005, XX .02, X .1; ANGLES ±0° 30'. REMOVE BURRS AND BREAK SHARP CORNERS. SURFACE QUALITY ✓	DRN. C. Stull	DATE 8-29-72	digital EQUIPMENT CORPORATION MAYNARD MASSACHUSETTS
	CHK'D. C. Teschner	DATE 9-19-72	
	ENG. William Lyons	DATE 5-15-72	TITLE: 16 BIT COMPUTER ASSY (PDP11Ø5)
	PROJ. ENG.	DATE	
	PROD.	DATE	
MATERIAL: —	NEXT HIGHER ASSY: B-DD 11Ø5-Ø		SIZE D / CODE UA / NUMBER 1105-0-Ø / REV 1
FINISH: —	SCALE NONE		
	SHEET 2 OF 5		DIST

REVISIONS: REV | CHANGE NO. | CHK

This drawing and specifications, herein, are the property of Digital Equipment Corporation and shall not be reproduced or copied or used in whole or in part as the basis for the manufacture or sale of items without written permission. 1972

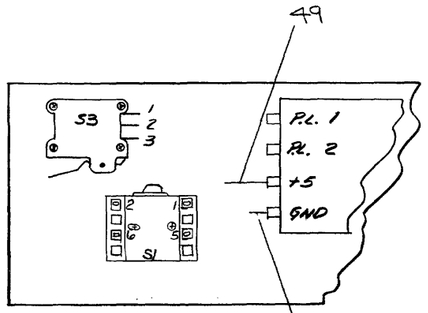

VIEW D-D
SCALE- NONE

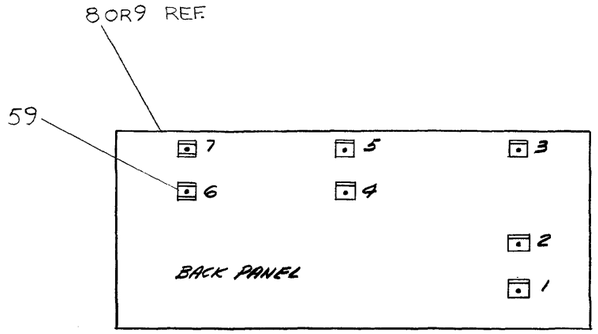

VIEW F-F
SCALE : NONE

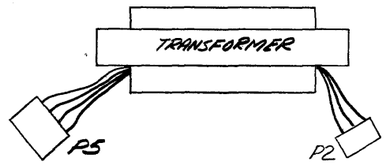

VIEW H-H
SCALE: NONE

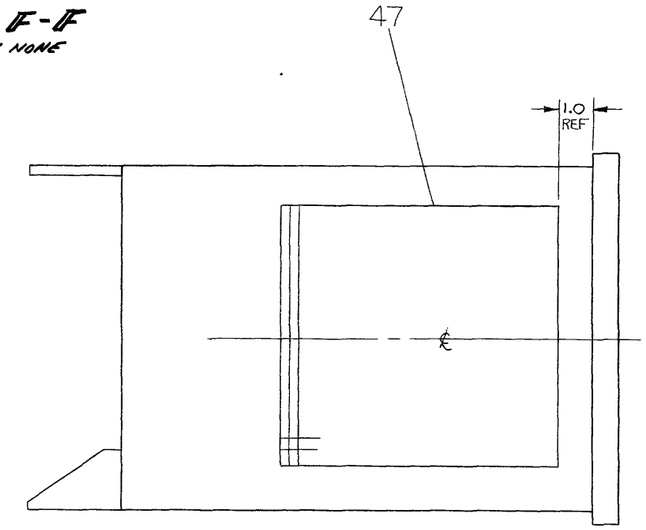

TOP VIEW
(WITH TOP COVER)

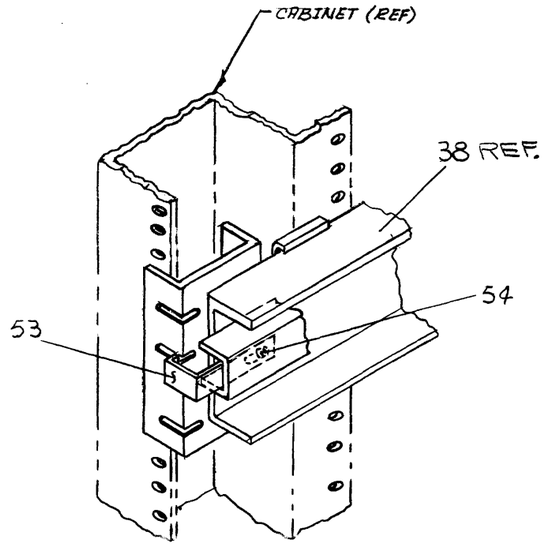

LOCATION OF SHIPPING BRACKETS WHEN UNIT IS SUPPLIED IN CAB. (BOTH SIDES)

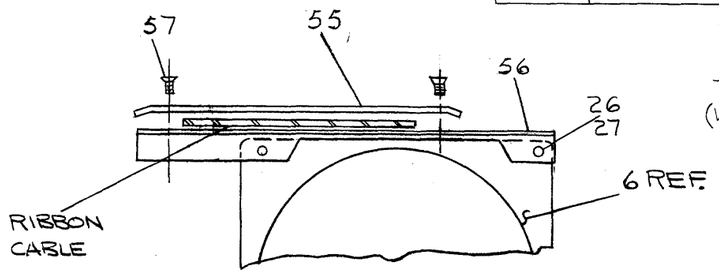

VIEW L-L
SCALE: NONE

REVISIONS			
REV.	CHANGE NO.	CHK.	

FIRST USED ON OPTION/MODEL	QTY.	DESCRIPTION	PART NO.	ITEM NO.
PDP1105		PARTS LIST		

UNLESS OTHERWISE SPECIFIED DIMENSION IN INCHES. TOLERANCES

DECIMALS	ANGLES
XXX = .005 XX = .02 .X = .1	±0° 30'

REMOVE BURRS AND BREAK SHARP CORNERS SURFACE QUALITY ✓

MATERIAL

FINISH

DRN.	DATE	3-27-72
CHK'D. C. Teschner	DATE	4-14-72
ENG. Chan Lyons	DATE	5-15-72
PROJ. ENGR.	DATE	6-6-72
PROD.	DATE	

digital EQUIPMENT CORPORATION MAYNARD MASSACHUSETTS

TITLE: 16 BIT COMPUTER ASSY (PDP1105)

NEXT HIGHER ASSY. B-CO-1105-0

SCALE NONE

SHEET 3 OF 5

SIZE	CODE	NUMBER	REV.
D	UA	1105-0-0	H

DIST.

DEC FORM NO DRD 100-A

This drawing and specifications herein are the property of Digital Equipment Corporation and shall not be reproduced or copied or used in whole or in part as the basis for the manufacture or sale of items without written permission. 1973

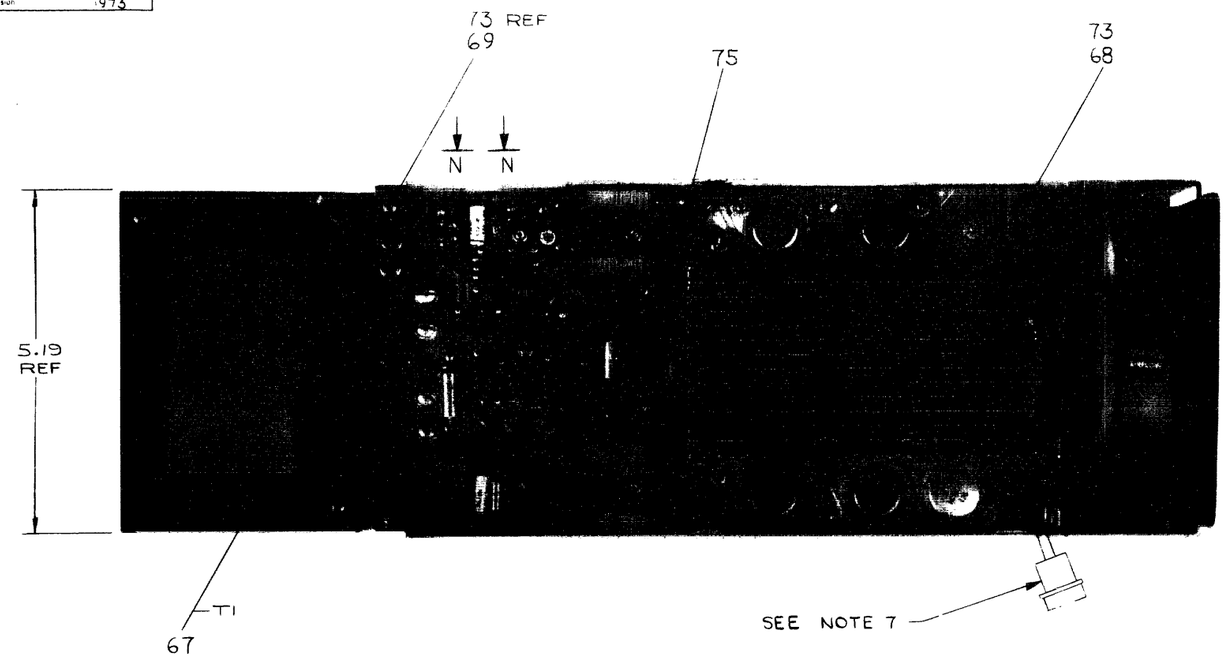

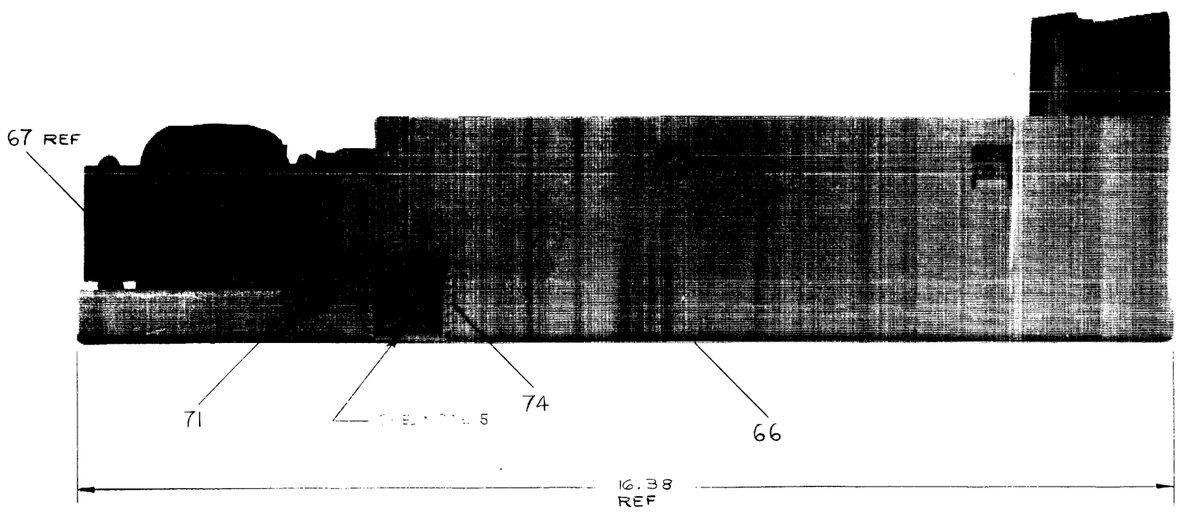

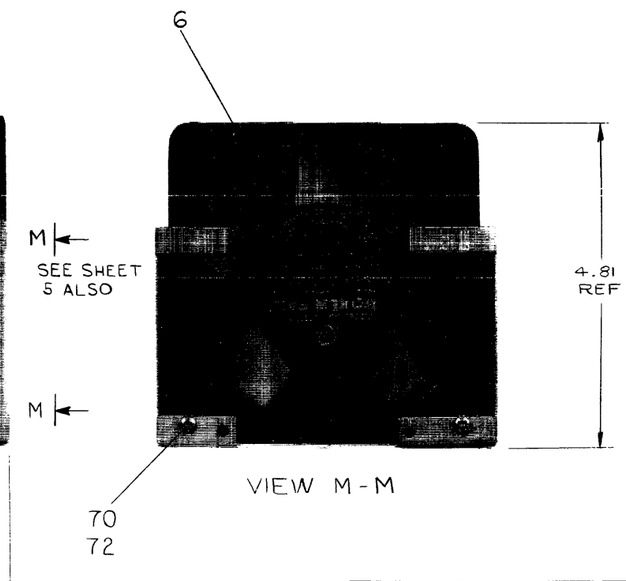

FIRST USED ON OPTION/MODEL	QTY.	DESCRIPTION	PART NO.	ITEM NO.
11/05		PARTS LIST		

UNLESS OTHERWISE SPECIFIED DIMENSION IN INCHES TOLERANCES

DECIMALS	ANGLES
XXX .005	1° 0' 30"
XX .02	
X .1	

REMOVE BURRS AND BREAK SHARP CORNERS SURFACE QUALITY ✓

MATERIAL: SEE PART LIST

FINISH: —/—/—

DRN	J. CAHILL	DATE 2.24.72
CHK	C. TESCHNER	DATE 4-14-72
ENG	A. LYONS	DATE 5-15-72
PROJ ENG	B. WEEKS	DATE 5-16-72
PROD	R. PETERSON	DATE 5-16-72

NEXT HIGHER ASSY: BDD-1105-0

SCALE: —

SHEET 4 OF 5

digital EQUIPMENT CORPORATION MAYNARD MASSACHUSETTS

TITLE: 16 BIT COMPUTER ASSY (PDP 1105)

SIZE	CODE	NUMBER	REV.
D	UA	1105-0-0	H

DIST

REVISIONS: CHANGE NO. | REV. | CHK

This drawing and specifications, herein, are the property of Digital Equipment Corporation and shall not be reproduced or copied or used in whole or in part as the basis for the manufacture or sale of items without written permission. 1973

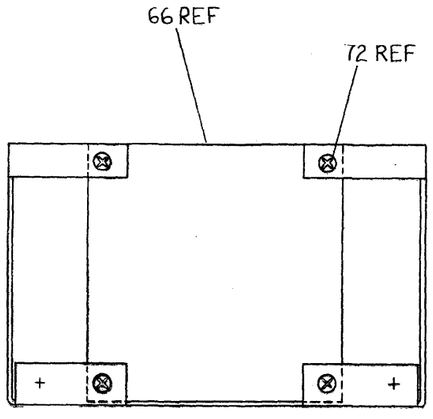

VIEW M-M

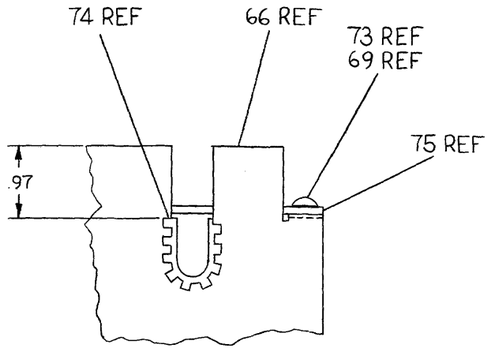

VIEW N-N

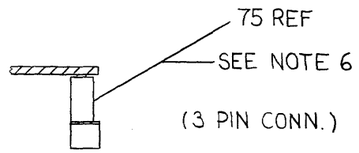

SECTION P-P

FIRST USED ON OPTION/MODEL: 1105	QTY.	DESCRIPTION	PART NO. / ITEM NO.
		PARTS LIST	

UNLESS OTHERWISE SPECIFIED DIMENSION IN INCHES. TOLERANCES
DECIMALS: XXX ± .005, XX ± .02, X ± .1 — ANGLES: ± 0° 30'
REMOVE BURRS AND BREAK SHARP CORNERS SURFACE QUALITY ✓
MATERIAL —
FINISH —

DRN. J CAHILL	DATE 2-24-72	digital EQUIPMENT CORPORATION MAYNARD MASSACHUSETTS
CHK'D. C TESCHNER	DATE 4-14-72	
ENG. A. LYONS	DATE 5-15-72	TITLE: 16 BIT COMPUTER ASSY (PDP 1105)
PROJ. ENG. B. WEEKS	DATE 5-16-72	
PROD. R. PETERSON	DATE 5-16-72	
NEXT HIGHER ASSY. B-DD-1105-0		SIZE D / CODE UA / NUMBER 1105-0-0 / REV. H
SCALE NONE		DIST.
SHEET 5 OF 5		

REVISIONS: REV. | CHANGE NO. | CHK

BRUNING 40-107 15M-8 DEC FORM NO DRD 100-A

SIZE D / CODE UA / NUMBER 1105-0-0 / REV. H

This drawing and specifications, herein, are the property of Digital Equipment Corporation and shall not be reproduced or copied or used in whole or in part as the basis for the manufacture or sale of items without written permission. 1973

ITEM NO.	DWG. NO./PART NO.	DESCRIPTION	QUANTITY / VARIATION															
			1105-FA	1105-FB	1105-FE	1105-FF	1105-HA	1105-HB	1105-JA	1105-JB	1105-KA	1105-KB	1105-LA	1105-LB	1105-MA	1105-MB	1105-PA	1105-PB
1	D-PS-1210974-0-0	1.75 FILLER STRIP	1	1	1	1	1	1	1	1	1	1	1	1	X	X	X	X
2	D-UA-KY11-J-Ø	CONSOLE ASSY	X	X	X	X	1	1	1	1	1	1	1	1	X	X	X	X
3	C-MD-7409460-Ø-Ø	COVER, TOP	1	1	1	1	1	1	1	1	1	1	1	1	1	1	1	1
4	E-IA-7409458-Ø-Ø	CHASSIS	1	1	1	1	1	1	1	1	1	1	1	1	1	1	1	1
5	D-IA-7409459-Ø-Ø	BRACKET,CHASSIS SLIDE (L.H.)	1	1	1	1	1	1	1	1	1	1	1	1	1	1	1	1
6	1209403	FAN, SUPER BOXER	2	2	2	2	2	2	2	2	2	2	2	2	2	2	2	2
7	D-IA-7409580-Ø-Ø	CARD GUIDE ASSY (L.H.)	1	1	1	1	1	1	1	1	1	1	1	1	1	1	1	1
8	C-IA-5409818-Ø-Ø	BACK PANEL ASSY (8K)	1	1	1	1	X	X	X	X	1	1	1	1	X	X	X	X
9	C-IA-5410035-Ø-Ø	BACK PANEL ASSY (16K)	X	X	X	X	1	1	1	1	X	X	X	X	X	X	X	X
10	9009191	SCR PHL HD PAN NYLOK *8-32 x 1/4 LG	18	18	18	18	18	18	18	18	18	18	18	18	18	18	18	18
11	D-IA-7008856-Ø-Ø	HARNESS (D.C.)	1	1	1	1	1	1	1	1	1	1	1	1	1	1	1	1
12	C-IA-7410777-0-0	RET. CONN. BLOCK (L.H.)	1	1	1	1	1	1	1	1	1	1	1	1	1	1	1	1
13	C-UA-BCØ5H-Ø-Ø	LINE SET BCØ5H (115V/60HZ)	1	X	1	X	1	X	1	X	1	X	1	X	1	X	1	X
14	C-UA-BCØ5J-Ø-Ø	LINE SET BCØ5J (230V/50HZ)	X	1	X	1	X	1	X	1	X	1	X	1	X	1	X	1
15	C-IA-7409449-Ø-Ø	BRACKET,CHASSIS SLIDE (R.H.)	1	1	1	1	1	1	1	1	1	1	1	1	1	1	1	1
16	E-IA-7008713-Ø-Ø	AC INPUT HARNESS	1	1	1	1	1	1	1	1	1	1	1	1	1	1	1	1
17																		
18	D-IA-7409581-Ø-Ø	CARD GUIDE ASSY (R.H.)	1	1	1	1	1	1	1	1	1	1	1	1	1	1	1	1
19	C-IA-7410778-Ø-Ø	RET. CONN. BLOCK (R.H.)	1	1	1	1	1	1	1	1	1	1	1	1	1	1	1	1
20	D-IA-7409463-Ø-Ø	FAN MTG PLATE	1	1	1	1	1	1	1	1	1	1	1	1	1	1	1	1
21	C-MD-7409479-Ø-Ø	PLATE, PRESSURE	2	2	2	2	2	2	2	2	2	2	2	2	2	2	2	2
22	9006047-1	SCR PHL HD PAN *8-32 x 2	2	2	2	2	2	2	2	2	2	2	2	2	2	2	2	2
23	D-PS-1210931-Ø-Ø	BLOCK, CABLE RETAINING	1	1	1	1	1	1	1	1	1	1	1	1	1	1	1	1
24	C-MD-7409480-Ø-Ø	SWIVEL NUT	1	1	1	1	1	1	1	1	1	1	1	1	1	1	1	1
25	D-MD-7409482-Ø-Ø	PLATE LOWER RETAINER	1	1	1	1	1	1	1	1	1	1	1	1	1	1	1	1
26	9006024-1	SCR PHL HD PAN *6-32 x 1/2	6	6	6	6	6	6	6	6	6	6	6	6	6	6	6	6
27	9009165	FAN CLIP	6	6	6	6	6	6	6	6	6	6	6	6	6	6	6	6
28	C-PS-1210698-Ø-Ø	GUIDE CARD CENTER	2	2	2	2	2	2	2	2	2	2	2	2	2	2	2	2
29	C-IA-7008820-Ø-Ø	HEADER CABLE ASSY	1	1	1	1	1	1	1	1	1	1	1	1	1	1	1	1
30	9006074-3	SCR PHL HD TRUSS #10-32 x 5/8	2	2	2	2	2	2	2	2	2	2	2	2	2	2	2	2
31	9009186	SCR PHL HD PAN NYLOC #6-32 x 5/16	16	16	16	16	16	16	16	16	16	16	16	16	16	16	16	16
32	9006071-3	SCR PHL HD TRUSS #10-32 x 3/8	4	4	4	4	4	4	4	4	4	4	4	4	4	4	4	4
33	9007651	WASHER EXT TOOTH #10	6	6	6	6	6	6	6	6	6	6	6	6	6	6	6	6
34	D-IA-7409533-Ø-Ø	COVER SIDE	1	1	1	1	1	1	1	1	1	1	1	1	1	1	1	1
35	C-MD-7409591-Ø-Ø	CLAMP	1	1	1	1	1	1	1	1	1	1	1	1	1	1	1	1
36	9009173	SCR BINDER HD NYLON #8-32 x 1/4	2	2	2	2	2	2	2	2	2	2	2	2	2	2	2	2
37	9008074	SPACER 1/2" AF x 5/16-#10	2	2	2	2	2	2	2	2	2	2	2	2	2	2	2	2
38	1210945	CHASSIS SLIDE	X	1	1	1	1	1	1	1	1	1	1	1	X	X	X	X
39	9008196	CLIP-ON RECPT.-SOUTHCO #82-47-104-15	4	4	4	4	4	4	4	4	4	4	4	4	4	4	4	4
40	D-MU-1105-Ø1-0	MODULE UTILIZATION (8K)	1	1	1	1	X	X	X	X	1	1	1	1	1	1	1	1
41	D-MU-1105-Ø2-0	MODULE UTILIZATION (16K)	X	X	X	X	1	1	1	1	X	X	X	X	X	X	X	X
42	9009192	SCR PHL HD PAN NYLOC #8-32 x 3/8	6	6	6	6	6	6	6	6	6	6	6	6	6	6	6	6
43	9006005-1	SCR PHL HD PAN #2-56 x 1/2	2	2	2	2	2	2	2	2	2	2	2	2	2	2	2	2

REVISIONS			
REV.	CHANGE NO.	CHK	
F	11/05-00040 REVISED & REDRAWN 1-24-72 S. Hodgson M. TITLEBAUM		
H	1105-00041		

FIRST USED ON OPTION/MODEL
11/Ø5

UNLESS OTHERWISE SPECIFIED
UNLESS OTHERWISE SPECIFIED
DIMENSION IN INCHES
TOLERANCES
DECIMALS ± .005 FRACTIONS ± 1/64 ANGLES ± 0°30'
FINAL SURFACE QUALITY ✓
REMOVE BURRS AND BREAK SHARP CORNERS

MATERIAL

FINISH

		DATE
DRN.	J. CAHILL	2/25/2
CHK'D.	C. TESCHNER	5/2/2
ENG.	A. LYONS	5/15/2
PROJ. ENG.	B. WEEKS	5/16/2
PROD.	R. PETERSON	5/16/2

NEXT HIGHER ASSY.
D-UA-1105-0-0

SCALE

SHEET 1 OF 2

digital EQUIPMENT CORPORATION
MAYNARD, MASSACHUSETTS

TITLE
16 BIT COMPUTER
ASSY (PDP 11Ø5)

SIZE	CODE	NUMBER	REV.
C	PL	11Ø5-0-0	H

DIST.

REV. H
NUMBER 11Ø5-0-0
SIZE CODE C PL

DEC FORM NO. DRC 110

This drawing and specifications, herein, are the property of Digital Equipment Corporation and shall not be reproduced or copied or used in whole or in part as the basis for the manufacture or sale of items without written permission.

ITEM NO.	DWG. NO./PART NO.	DESCRIPTION	QUANTITY / VARIATION
			1105-PA / 1105-PB / 1105-PE / 1105-PF / 1105-HA / 1105-HB / 1105-QA / 1105-QB / 1105-RA / 1105-RB / 1105-SA / 1105-SB / 1105-MA / 1105-MB / 1105-PA / 1105-PB
44	9000[illegible]1	WASHER INT TOOTH #[illegible]	2 2 2 2 2 2 2 2 2 2 2 2 2 2 2 2
45	900844[illegible]	CABLE CLAMP (1/4)	4 4 4 4 4 4 4 4 4 4 4 4 4 4 4 4
46	9009210-[illegible]	SCOTCH BRAND ADHESIVE TRANSFER TAPE	A/R A/RA/RA/RA/RA/RA/RA/R A/RA/RA/RA/RA/RA/RA/R
47			
48	7409729-Ø1	JUMPER POWER (BLACK)	1 1 1 1 1 1 1 1 1 1 1 1 1 1 1 1
49	7409729-Ø2	JUMPER POWER (RED)	1 1 1 1 1 1 1 1 1 1 1 1 1 1 1 1
[illegible]	9009224	SCR SLOT PAN HD #8-32 x 1/4 LG	10 10 10 10 10 10 10 10 10 10 10 10 10 10 10 10
51	A-DC-5309900-0-0	POWER CONTROL DECAL (230V)	X 1 X 1 X 1 X 1 X 1 X 1 X 1 X 1
52	A-DC-5309899-0-0	POWER CONTROL DECAL (115V)	1 X 1 X 1 X 1 X 1 X 1 X 1 X 1 X
53	B-MD-7409816-0-0 *	SHIPPING BRACKET	2 2 2 2 2 2 2 2 2 2 2 2 2 2 2 2
54	9008143-1	SCR PHL HD PAN #8-32 X 1/4 THD CUTTING	2 2 2 2 2 2 2 2 2 2 2 2 2 2 2 2
55	B-MD-7409817-0-0	PLATE, CABLE CLAMP	1 1 1 1 1 1 1 1 1 1 1 1 1 1 1 1
56	C-MD-7409818-0-0	BRACKET CABLE CLAMP	1 1 1 1 1 1 1 1 1 1 1 1 1 1 1 1
57	9006011-2	SCR PHL HD FLAT #4-40 X 3/8	2 2 2 2 2 2 2 2 2 2 2 2 2 2 2 2
58	B-MD-7409828-0-0	BRACKET	1 1 1 1 1 1 1 1 1 1 1 1 1 1 1 1
59	9007194	QUIK DISCONNECT	1 1 1 1 1 1 1 1 1 1 1 1 1 1 1 1
60	7409903	JUMPER POWER (BLACK)	1 1 1 1 1 1 1 1 1 1 1 1 1 1 1 1
61	D-UA-KY11-JC-Ø	CONSOLE ASSY	X X X X X X X X X X X X 1 1 1 1
62	D-MD-7409978-0-0	BOTTOM TRIM	X X X X X X X X X X X X 1 1 1 1
63	D-AD-7009119-0-0	BACK PANEL ASSY	X X X X X X X X X X X X 1 1 1 1
	* USED ONLY WHEN INSTALLED IN CABINET		
64	D-IA-7409533-1-0	COVER SIDE	X X X X X X X X X X X X 1 1 1 1
65	1700021-0	ELECTROMAGNETIC SHIELD 1 OZ. CU	A/R A/RA/RA/RA/RA/RA/R A/RA/RA/RA/RA/RA/RA/R
66	E-IA-[illegible]309816-0-0	CHASSIS	1 1 1 1 1 1 1 1 1 1 1 1 1 1 1 1
67	D-IA-7008726-0-0	TRANSFORMER MMC 415 ° -1	1 1 1 1 1 1 1 1 1 1 1 1 1 1 1 1
68	9006023-1	SCR PHL PAN HD #6-32 X.44 LG	4 4 4 4 4 4 4 4 4 4 4 4 4 4 4 4
69	9006020-1	SCR PHL PAN HD #6-32 X.25 LG	2 2 2 2 2 2 2 2 2 2 2 2 2 2 2 2
70	9006031-1	SCR PHL PAN HD #6-32 X1.75 LG	2 2 2 2 2 2 2 2 2 2 2 2 2 2 2 2
71	9006563	NUT KEPS #8-32	4 4 4 4 4 4 4 4 4 4 4 4 4 4 4 4
72	9006560	NUT KEPS #6-32	2 2 2 2 2 2 2 2 2 2 2 2 2 2 2 2
73	9007[illegible]49	WASHER EXT. LOCK #6-32	6 6 6 6 6 6 6 6 6 6 6 6 6 6 6 6
74	9007035	GROMMET CATERPILLAR	A/RA/RA/RA/RA/RA/RA/RA/R A/RA/RA/RA/RA/RA/RA/R
75	E-IA-5409728-0-0	REGULATOR BOARD	1 1 1 1 1 1 1 1 1 1 1 1 1 1 1 1
76	D-UA-KY11-JF-0	CONSOLE ASSY	1 1 1 1 X X X X X X X X X X X X
77	A-DC-5309413-0-0	SPECIAL DECAL (UL)	1 1 1 1 1 1 1 1 1 1 1 1 1 1 1 1
78	A-DC-5309414-0-0	SPECIAL DECAL (UL)	1 1 1 1 1 1 1 1 1 1 1 1 1 1 1 1

REVISIONS | REV. | CHANGE NO. | CHK

FIRST USED ON OPTION/MODEL: 11/Ø5

UNLESS OTHERWISE SPECIFIED
UNLESS OTHERWISE SPECIFIED
DIMENSION IN INCHES
TOLERANCES
DECIMALS ± .005 FRACTIONS ± 1/64 ANGLES ± 0°30'
FINAL SURFACE QUALITY ✓
REMOVE BURRS AND BREAK SHARP CORNERS

MATERIAL

FINISH

DRN. [illegible] DATE 2/25/0
CHK'D. [illegible] DATE 2/25/
ENG. [illegible] DATE
PROJ. ENG. R. WEEKS DATE
PROD. R. PETERSON DATE
NEXT HIGHER ASSY. [illegible]
SCALE
SHEET [illegible] OF [illegible]

digital EQUIPMENT CORPORATION MAYNARD, MASSACHUSETTS

TITLE: [illegible] COMPUTER ASSY PDP [illegible]

SIZE	CODE	NUMBER	REV.
C	PL	[illegible]	H

DIST.

REV. H
NUMBER 1105-0-0
SIZE CODE C PL

DEC FORM NO.

digital EQUIPMENT CORPORATION
MAYNARD, MASSACHUSETTS

DRAWING DIRECTORY

CUSTOMER PRINT SET INDEX

THIS IS PRINT SET

SEQUENCE		SEQUENCE
DWG. DIRECTORY	B-DD-BCØ5-Ø	
LINE SET 115V	C-UA-BCØ5H-Ø-Ø	
LINE SET 230V	C-UA-BCØ5J-Ø-Ø	
A.C INPUT BOX	D-UA-H4ØØ-Ø-Ø	
A.C INPUT BOX (P.L)	A-PL-H4ØØ-Ø-Ø	
PWR CONTROL BD. 115V	C-IA-5409824-Ø-Ø	
PWR CONTROL BD. 230V	C-IA-5409825-Ø-Ø	

UNIT VARIATIONS

VARIATION	TITLE	PRINT SET TYPE: BCØ5H-1
BCØ5H	LINE SET 115VAC 7 AMP	X
BCØ5J	LINE SET 230VAC 5 AMP	X

REVISIONS: REV / CHG. NO. / DATE

USED ON OPTION/MODEL: 11/Ø

DRN.	D. FONTAINE	DATE 4/1/72
CHK'D.	[illegible]	DATE 4-1-72
PROJ ENG.	[illegible]	DATE 4-18-72
PROD.	[illegible]	DATE 5/1/72
FIELD SERV.	[illegible]	DATE [illegible]

SHEET 1 OF 3

TITLE: LINE SET

SIZE	CODE	NUMBER	REV
B	DD	BCØ5H-Ø	

DIST

DRB 106

DEC 6 (325) 1062 . N871

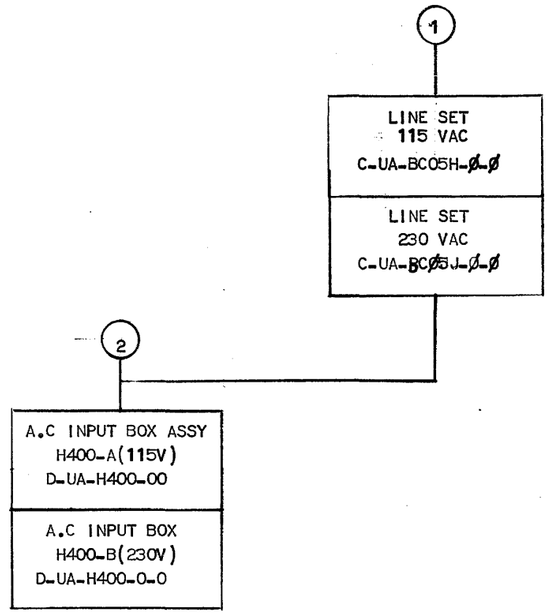

TITLE		SIZE	CODE	NUMBER	REV
LINE SET	SHEET 2 OF 3	B	DD	BCØ5H-Ø	

| CUSTOMER PRINT SET | | | | | | | ELECTRICAL | | | | | | |

This drawing and specifications, herein, are the property of Digital Equipment Corporation and shall not be reproduced or copied or used in whole or in part as the basis for the manufacture or sale of items without written permission. 1972

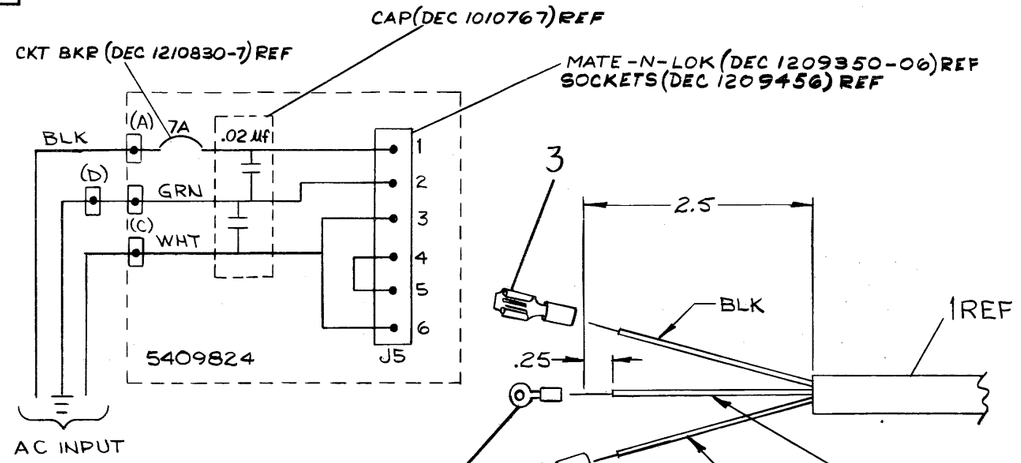

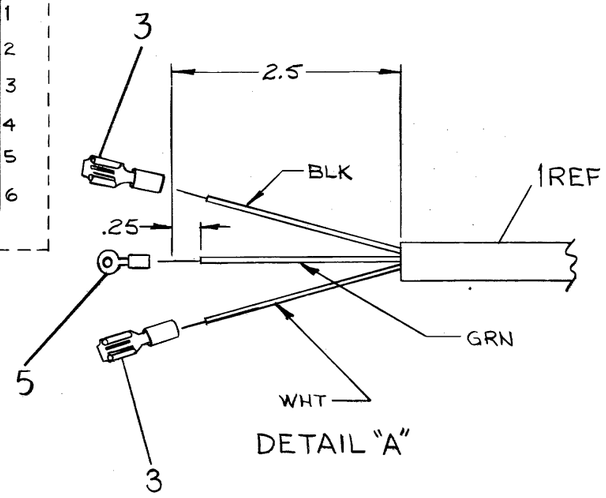

DETAIL "A"

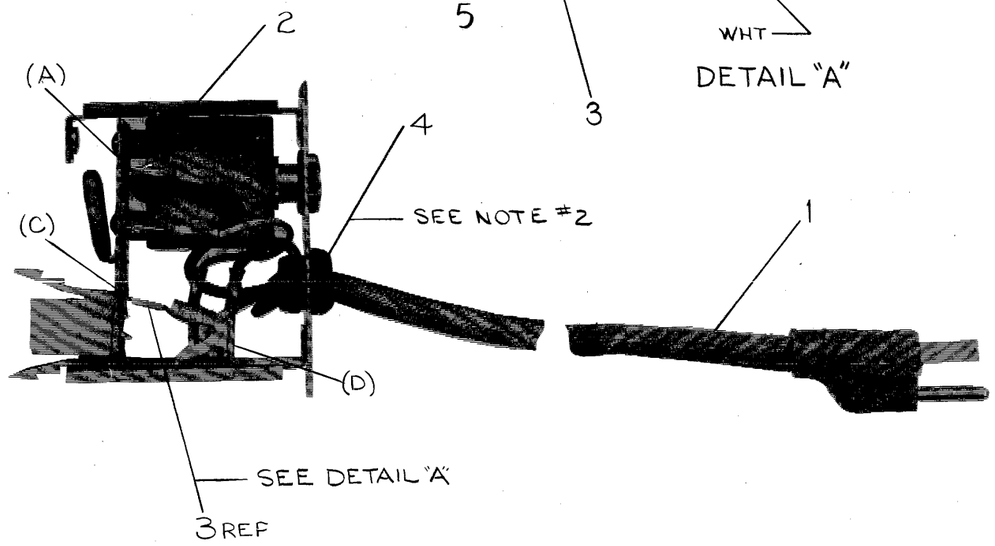

SHOWN WITHOUT COVER

NOTES:

1. CONNECT ITEM #1 (POWER CORD) AND ITEM #2 (AC INPUT BOX) PER CIRCUIT SCHEMATIC.
2. FOR INSTALLATION USE HEYCO #29 STRAIN RELIEF PLIERS

ITEM NO.	QTY.	DESCRIPTION	PART NO.
5	1	SOLDER CONN ARKLESS	9007929-0
4	1	STRAIN RELIEF SR-6N3-4	9008492-2
3	2	SOLDERLESS CONN. ARKLESS	9007919
2	1	AC INPUT BOX H400A	D-UA-H400-0-0
1	1	POWER CORD 120V	170015-6

PARTS LIST

REV.	REVISIONS	CHK	
A	CHANGE NO. BC058H-00001		3-28-72
B	BC05H-00002		5-13-72
C	H400-00002		5-25-72
D	BC05H-00003		5-31-72
E			11-2-72

FIRST USED ON OPTION/MODEL: 11/05

UNLESS OTHERWISE SPECIFIED DIMENSION IN INCHES. TOLERANCES

DECIMALS	ANGLES
.XXX = .005 .XX = .02 .X = .1	±0° 30'

REMOVE BURRS AND BREAK SHARP CORNERS SURFACE QUALITY ✓

MATERIAL

FINISH

		DATE
DRN.	T. Guillin	12-27-71
CHK'D		1-4-72
ENG.	David DeManelle	1-4-72
PROJ. ENG.		1-7-72
PROD.	R K Peterson	1/7/72

NEXT HIGHER ASSY.

SCALE

SHEET OF

digital EQUIPMENT CORPORATION MAYNARD MASSACHUSETTS

TITLE: LINE SET 115VAC 7AMP

SIZE	CODE	NUMBER	REV.
C	UA	BC05H-0-0	D

DIST.

DEC FORM NO. DRC 100-A

This drawing and specifications, herein, are the property of Digital Equipment Corporation and shall not be reproduced or copied or used in whole or in part as the basis for the manufacture or sale of items without written permission. 1972

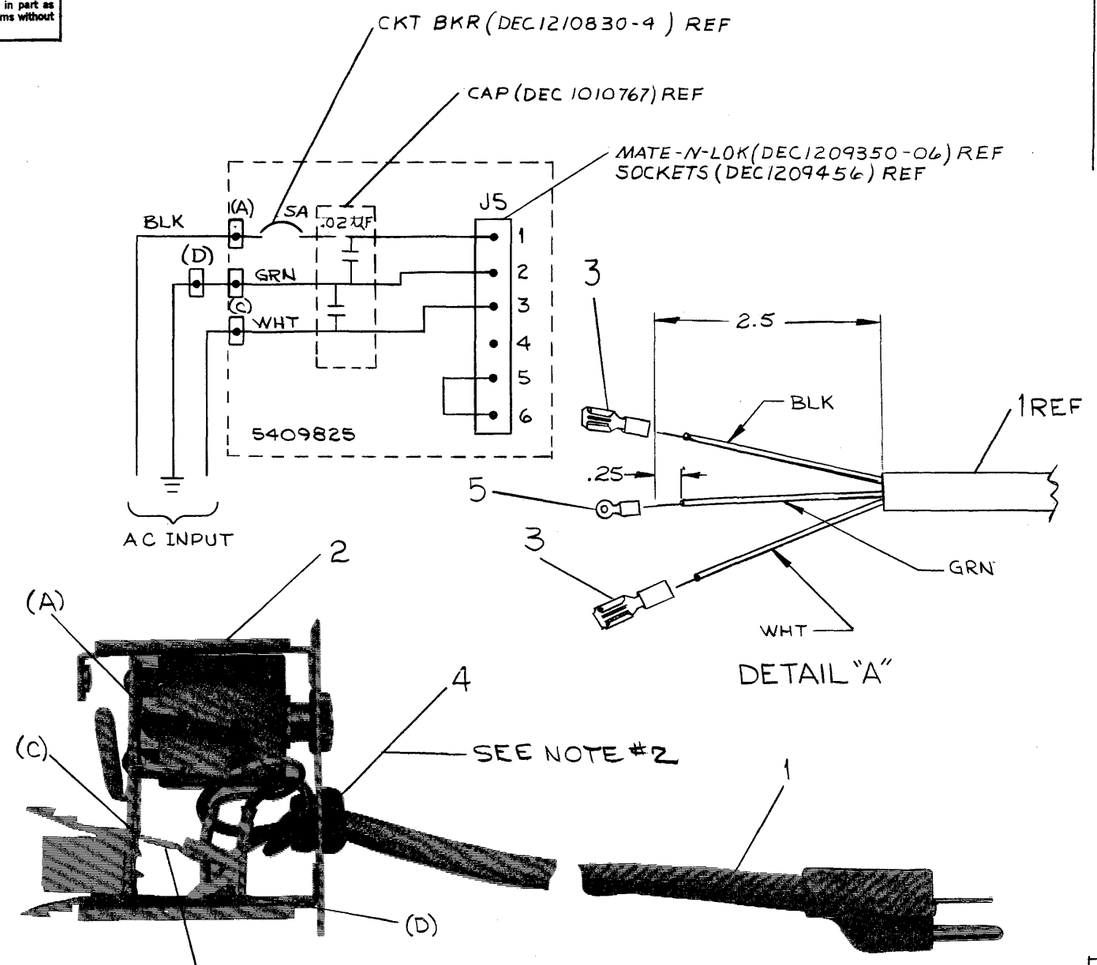

NOTES:

1. CONNECT ITEM #1 (POWER CORD) AND ITEM #2 (AC INPUT) PER CIRCUIT SCHEMATIC.
2. FOR INSTALLATION USE HAYCO #29 STRAIN RELIEF PLIERS.

ITEM NO.	DESCRIPTION	PART NO.	QTY.
1	SOLDER CONN ARKLESS	9007929-0	5
2	GROMMET HEYCO SR-6N3-4	9008492-2	4
3	SOLDER CONN ARKLESS	9007919	3
4	AC INPUT BOX H400 B	D-UA-H400-0-0	2
5	POWER CORD 240V	1700016-6	1

PARTS LIST

FIRST USED ON OPTION/MODEL: 11/05

UNLESS OTHERWISE SPECIFIED DIMENSION IN INCHES. TOLERANCES

DECIMALS	ANGLES
.XXX = .005	±0° 30'
.XX = .02	

REMOVE BURRS AND BREAK SHARP CORNERS SURFACE QUALITY ✓

MATERIAL

FINISH

	NAME	DATE
DRN	T. Guillen	12-27-71
CHK'D	[illegible]	1-4-72
ENG.	David DeMoranville 1972	
PROJ ENG.	[illegible]	1-7-72
PROD	R.K. Peterson	1/7/72

NEXT HIGHER ASSY.

SCALE

SHEET OF

digital EQUIPMENT CORPORATION MAYNARD MASSACHUSETTS

TITLE: LINE SET 230V AC 4 AMP

SIZE	CODE	NUMBER	REV.
C	UA	BC05J-0-0	D

DIST.

REVISION: REV.	CHANGE NO.	CHK
A	BC05J-000001	Milwaukee 12-2-72 WOLFF
B	H400-000002	R. BURTON 5-25-72
C	BC05J-000002	R. BURTON 11-2-72
D	BC05J-000003	R. BURTON 12-20-72

DEC FORM NO. DRC 100-A

SIZE	CODE	NUMBER	REV.
C	UA	BC05J-0-0	D

This drawing and specifications, herein, are the property of Digital Equipment Corporation and shall not be reproduced or copied or used in whole or in part as the basis for the manufacture or sale of items without written permission. 1972

LEGEND		
NUMBER	VARIATION	USED ON
H4ØØ - A	115 VAC 7 AMP	BCØ5 H
H4ØØ - B	230 VAC 4 AMP	BCØ5 J
H4ØØ - C	115 VAC 10 AMP	BCØ5 U
H4ØØ - D	230 VAC 5 AMP	BCØ5 T

NOTES:

1. ITEM #11 (WIRE) AND TWO OF ITEM #12 (FASTON TABS) ARE TO BE CONNECTED FROM POINT D TO POINT B.

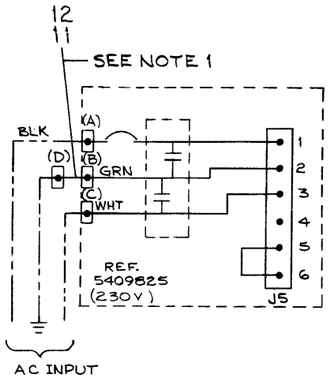

SEE LEGEND

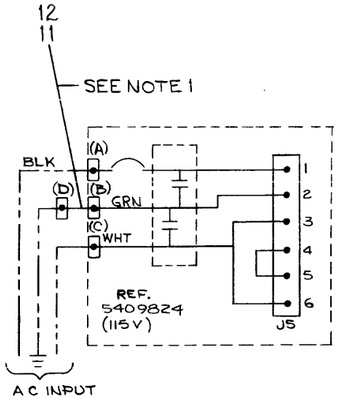

SEE LEGEND

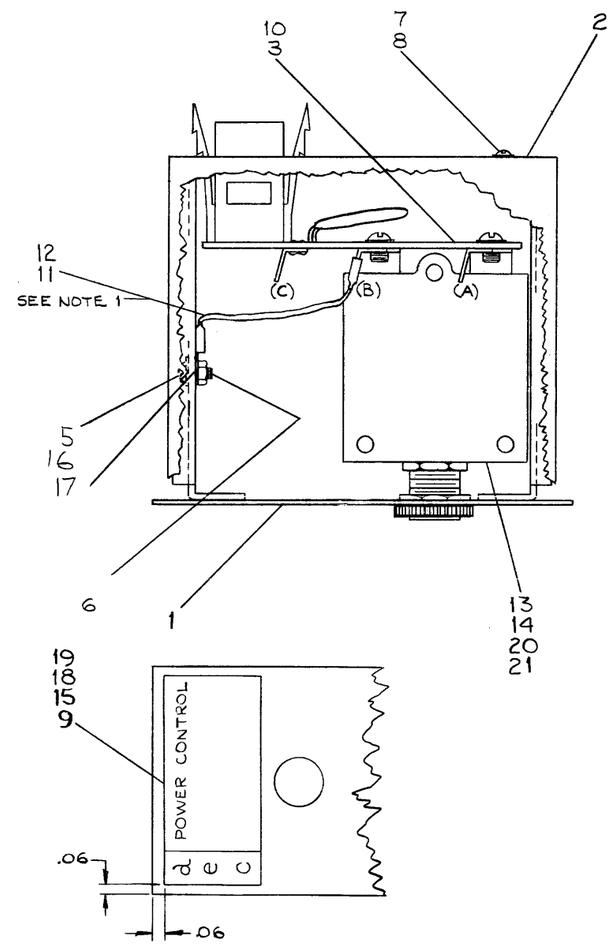

REVISIONS			
CHK	CHANGE NO.	REV.	
	H400-00002	A	5-25-72
	R. BURTON		5-31-72
	H400-00003	B	
	R. BURTON		11-9-72
	H400-00004	C	12-21-72
	R. BURTON		1-3-73
	H400-00005	D	1-18-73
	T. Quillin		
	R. BURTON		2-8-73

FIRST USED ON OPTION/MODEL	QTY.	DESCRIPTION	PART NO.	ITEM NO.
D-UA-BCØ5H-Ø-Ø	PARTS LIST			

UNLESS OTHERWISE SPECIFIED DIMENSION IN INCHES. TOLERANCES

DECIMALS	ANGLES
.XXX = .005	±0° 30'
.XX = .02	
.X = .1	

REMOVE BURRS AND BREAK SHARP CORNERS SURFACE QUALITY ✓

MATERIAL

FINISH

DRN. T. Quillin	DATE 12-23-71	
CHKD.	DATE 1-9-72	
ENG. David DeMarsonville	DATE 1-4-72	
PROJ. ENG. Ronald Hoover	DATE 1-7-72	
PROD. R.K. Peterson	DATE 1/7/72	

NEXT HIGHER ASSY. D-UA-BCØ5H-Ø-Ø

SCALE

SHEET 1 OF 1

digital EQUIPMENT CORPORATION MAYNARD MASSACHUSETTS

TITLE AC INPUT BOX ASS'Y

SIZE	CODE	NUMBER	REV.
D	UA	H4ØØ-Ø-Ø	D

DIST.

DEC FORM NO. DRD 100-A

DIGITAL EQUIPMENT CORPORATION
MAYNARD, MASSACHUSETTS

PARTS LIST

MADE BY TYRONE QUILLIN	CHECKED [signature]	SECTION 1
DATE 12-1-71	DATE 1-4-72	
ENG David DeMoranville	PROD R.K. Peterson	ISSUED SECT. 1
DATE 1-4-72	DATE 1/7/72	

ITEM NO.	DWG NO./PART NO.	DESCRIPTION	QUANTITY/VARIATION H400-A (115V)	H400-B (230V)	H400 C (115V)	H400 D (230V)
1	D-IA-5309845-0-0	BOX	1	1	|	|
2	C-MD-5309849-0-0	COVER	1	1	|	|
3	C-IA-5409825-0-0	POWER CONTROL BOARD (230V)	–	1	–	|
4	~~9007113~~	~~DOUBLE FASTAB~~	~~1~~	~~1~~	–	–
5	9006011-1	SCR PHL PAN HD #4-40 x 3/8 LG	1	1	|	|
6	9006557	KEP NUT HEX HD #4-40	1	1	|	|
7	9006633	WASHER INT. #6	1	1	|	|
8	9006020-1	SCR PHL PAN HD #6-32 x ¼ LG	1	1	|	|
9	A-DC-5309899-0-0	PWR CONTROL DECAL 115V	1	–	–	–
10	C-IA-5409824-0-0	POWER CONTROL BOARD (115V)	1	–	|	–
11	9107360-55	#18 AWG STRD ~~TEF INS~~ (GRN 3 IN.LG)	1	1	|	|
12	9007917	FASTON TABS	1	1	|	|
13	1210830-4	CRK BREAKER (WOOD 4 AMP)	–	1	–	–
14	1210830-7	CRK BREAKER (WOOD 7 AMP)	1	–	–	–
15	A-DC-5309900-0-0	PWR CONTROL DECAL (230V)	–	1	–	–
16	9006632	WASHER #4 INTERNAL TOOTH	1	1	|	|
17	9007929-01	CRIMP-ON EYELET	1	1	|	|
18	A-DC-7410727-0-0	PWR CONT DECAL	–	–	|	–
19	A-DC-7410726-0-0	PWR CONT DECAL	–	–	–	|
20	1210830-5	CKT BREAKER (WOOD 5 AMP)	–	–	–	|
21	1210830-10	CKT BREAKER (WOOD 10 AMP)	–	–	|	–

TITLE	ASSY NO.	SIZE	CODE	NUMBER	REV	ECO NO.
AC INPUT BOX ASS'Y	D-UA-H4ØØ-Ø-Ø	A	PL	H4ØØ-Ø-Ø	D	H400-10005
	SHEET 1 OF 1	DIST.	6			

This drawing and specifications, herein, are the property of Digital Equipment Corporation and shall not be reproduced or copied or used in whole or in part as the basis for the manufacture or sale of items without written permission.

NOTES:

1. FOR CIRCUIT SCHEMATIC REFER TO DWG D-UA-H4ØØ-Ø-Ø
2. ETCHED BOARD #5009821 MUST BE U.L. APPROVED. MANUFACTURER'S U.L. NUMBER LOCATION IS SHOWN ON AH DRAWING.

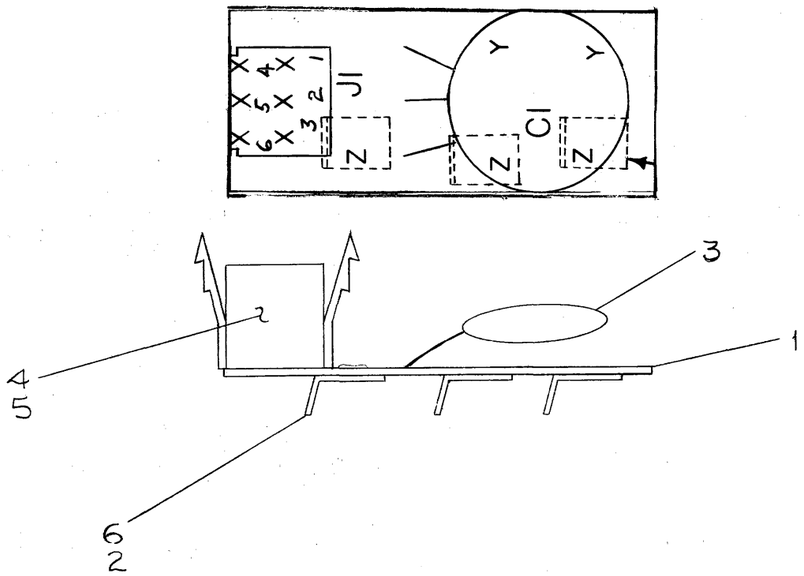

QTY.	REF DESIGNATION	DESCRIPTION	PART NO.	ITEM NO.
		ASSY/DRILLING HOLE LAYOUT	D-AH-5409824-05	REF
3		FASTON TAB	9008219	6
6		P.C. SOCKETS FEMALE	1209456	5
1	J1	MATE-N-LOCK 6-PIN	1209350-06	4
1	C1	CAP INPUT .02 μF	1010767	3
3		EYELET # GS4-5	9009000	2
		ETCHED CIRCUIT BD	5009821	1
		MODULE ECO HISTORY	B-MH-5409824-0-6	REF
		X-Y COORDINATE HOLE LOCATION	K-CO-5409824-0-0	REF

PARTS LIST

FIRST USED ON OPTION/MODEL: H4ØØ A

UNLESS OTHERWISE SPECIFIED DIMENSION IN INCHES. TOLERANCES

DECIMALS	ANGLES
XXX = .005	±0° 30'
.XX = .02	
.X = .1	

REMOVE BURRS AND BREAK SHARP CORNERS SURFACE QUALITY ✓

MATERIAL —/—/—

FINISH —/—/—

		DATE
DRN.	T. Quillin	12-8-71
CHK'D.	D. Lestrine	1-4-72
ENG.	[illegible]	1-4-72
PROJ. ENG.	Ronald Hawkins	1-6-72
PROD.	R.K. Patterson	1/7/72

NEXT HIGHER ASSY. C-UA-H4ØØ-Ø-Ø

SCALE —/—/—

SHEET 1 OF 1

digital EQUIPMENT CORPORATION MAYNARD MASSACHUSETTS

TITLE: POWER CONTROL BOARD (115V)

SIZE	CODE	NUMBER	REV.
C	IA	5409824-0-0	B

DIST. 6

REVISIONS

CHK	CHANGE NO.	REV.
BM	5409824-00001	A
	B.J. Marie 2-1-72	
	H. WOLFF	
	Ronald Hawkins 2-2-72	
[illegible]	5409824-00002	B
	H. Burton 5/22/72	
	R. BURTON	
	R. Burton [illegible]	

DEC FORM NO.

This drawing and specifications, herein, are the property of Digital Equipment Corporation and shall not be reproduced or copied or used in whole or in part as the basis for the manufacture or sale of items without written permission.

NOTES:

1. FOR CIRCUIT SCHEMATIC REFER TO DWG D-UA-H4ØØ-Ø-Ø.
2. ETCHED BOARD # 5009822 MUST BE U.L. APPROVED. MANUFACTURER'S U.L. NUMBER LOCATION IS SHOWN ON AH DRAWING.

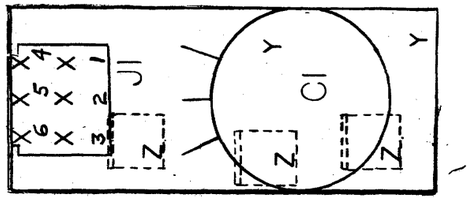

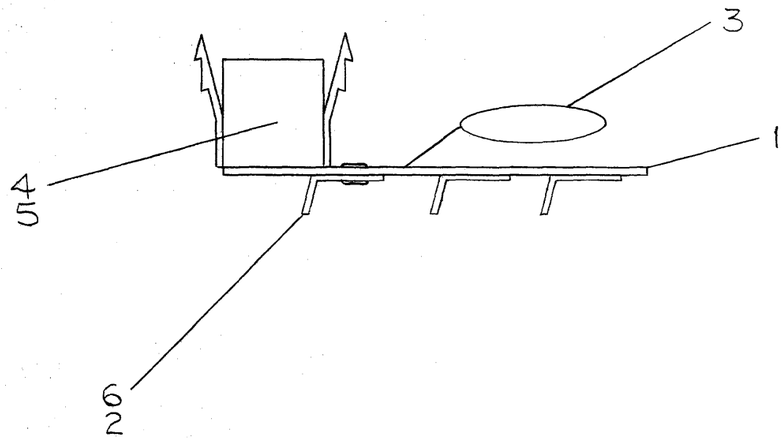

QTY.	REF DESIGNATION	DESCRIPTION	PART NO.	ITEM NO.
		ASSY/DRILLING HOLE LAYOUT	D-AH-5409825-0-5	REF
3		FASTON TAB	9008219	6
6		P.C. SOCKETS MALE	1209456	5
1	J1	6-PIN MATE-N-LOCK	1209350-06	4
1	C1	CAP. INPUT .02 MF	1010767	3
3		EYELET # G54-5	9009000	2
1		ETCHED CIRCUIT BOARD	5009822	1
		MODULE ECO HISTORY	B-MH-5409825-0-6	REF
		X-Y COORDINATE HOLE LOCATION	K-CO-5409825-0-4	REF

PARTS LIST

FIRST USED ON OPTION/MODEL: H4ØØ B

UNLESS OTHERWISE SPECIFIED DIMENSION IN INCHES. TOLERANCES

DECIMALS	ANGLES
XXX = .005 .XX = .02 .X = .1	±0° 30'

REMOVE BURRS AND BREAK SHARP CORNERS SURFACE QUALITY ✓

MATERIAL

FINISH

DRN. T. Guillon	DATE 12-9-71	
CHK'D L. Stone	DATE 12-72	
ENG.	DATE 4-72	
PROJ. ENG.	DATE	
PROD. R.W. Pratt	DATE 1/21/72	

NEXT HIGHER ASSY. C-UA-H4ØØ-Ø-Ø

SCALE

SHEET 1 OF 1

digital EQUIPMENT CORPORATION MAYNARD MASSACHUSETTS

TITLE: POWER CONTROL BOARD (230V)

SIZE	CODE	NUMBER	REV.
C	IA	5409825-0-0	A

REVISIONS			
CHK	CHANGE NO.		REV.
[illegible]	5401825 - C0001	R. WOLFF	A
	Rev by IWO 72-2-2		

DEC FORM NO. [illegible]

WIRE TABLE

ITEM NO.	DESCRIPTION AWG	COLOR	FROM POINT	FROM CONNECTION	FROM TERM	TO POINT	TO CONNECTION	TO TERM
9	22	RED	24	J10-1	6	19	J9-3	8
12	18	RED	11	P1-6	7			
9	22	RED	25	J11-1	6	27	J12-2	8
12	18	RED	20	J9-4	8	16	P1-4	7
12	18	RED	26	J12-1	8	1	J1-1	6
12	18	RED	2	J2-1	6	15	P1-1	7
13	18	VIO	3	J3-1	6	5	J5-1	8
13	18	VIO	5	J6-1	8			
14	18	BLK	4	J4-1	6	21	J9-5	8
14	18	BLK	14	P1-2	7			
14	18	BLK	10	J6-3	8	7	J5-3	8
15	18	GRY	6	J5-2	8	9	J6-2	8
11	18	WHT	23	J9-1	8	12	P1-3	7
10	22	WHT	18	J8-1	6			
12	18	RED	22	J9-2	8	13	P1-5	7
9	22	RED	17	J7-1	6			

NOTES:
1. USE TIE WRAPS (ITEM #16) APPROXIMATELY EVERY THREE INCHES WHEN NECESSARY AND AT EVERY BREAKOUT POINT

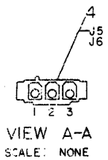

VIEW A-A
SCALE: NONE

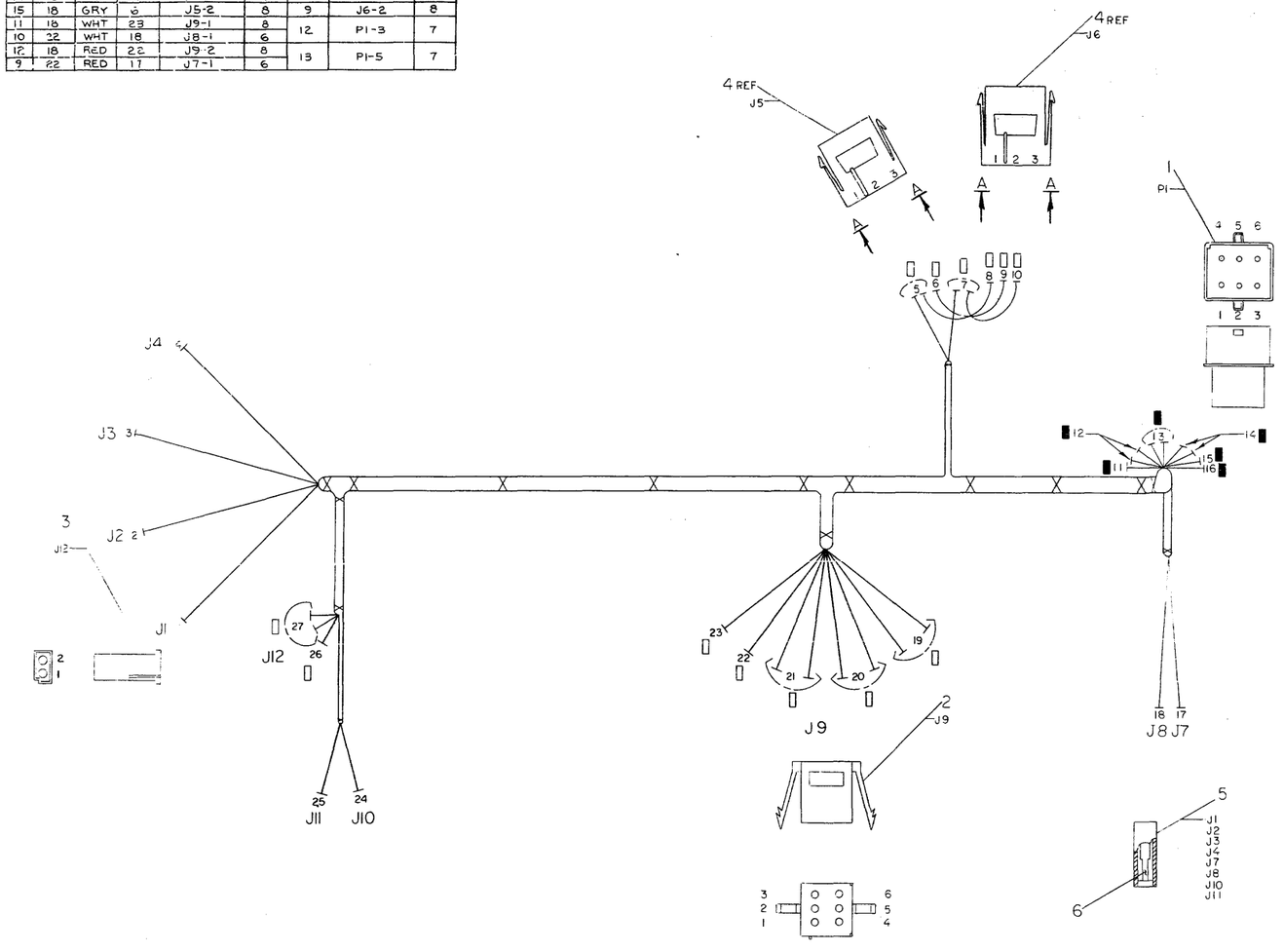

DO NOT REDUCE

SCALE
0 IN 6 IN 12 IN

X	QTY.	DESCRIPTION	PART NO.	ITEM NO.
	A/R	TIE WRAP, SST-M, PANDUIT	9007031	16
	A/R	WIRE, #18 AWG GRY	9107360-88	15
	A/R	WIRE, #18 AWG BLK	9107360-00	14
	A/R	WIRE, #18 AWG VIO	9107360-77	13
	A/R	WIRE, #18 AWG RED	9107360-22	12
	A/R	WIRE, #18 AWG WHT	9107360-99	11
	A/R	WIRE, #22 AWG WHT	9107350-99	10
	A/R	WIRE, #22 AWG RED	9107350-22	9
	13	SOCKET, TERM. CONTACT	1209379-01	8
	6	PIN, TERM. CONTACT	1209378-01	7
	8	MINI-FASTABS #60291-1	1210820-2	6
	8	HOUSING, 1-480417-0	1210820-1	5
	2	CONN, MATE-N-LOK, 3 PIN	1209350-03	4
	1	CONN, MATE-N-LOK, 2 PIN	1210821-2	3
	1	CONN, MATE-N-LOK, 6 PIN	1209350-06	2
	1	CONN, MATE-N-LOK, 6 PIN	1209351-06	1

PARTS LIST

FIRST USED ON OPTION/MODEL	PDP-1105
UNLESS OTHERWISE SPECIFIED DIMENSION IN INCHES. TOLERANCES	DECIMALS XXX ± .005, XX ± .02, X ± .1; ANGLES ± 0° 30'
REMOVE BURRS AND BREAK SHARP CORNERS. SURFACE QUALITY ✓	
MATERIAL	SEE PARTS LIST
FINISH	—
NEXT HIGHER ASSY.	D-UA-1105-0-0
DRN.	C. Gray 4-6-72
CHK'D.	C. Teschner 4-6-72
ENG.	[illegible] 6-13-72
PROJ. ENG.	[illegible] 6-13-72
PROG.	[illegible] 6-13-72
DIGITAL EQUIPMENT CORPORATION	MAYNARD, MASSACHUSETTS
TITLE	AC INPUT HARNESS (PDP-1105)
SIZE	E
CODE	IA
NUMBER	7008713-0-0
REV.	C
SCALE	1/1
SHEET	1 OF 1
DIST	

REV	DRAWING NO.	DESCRIPTION	DATE	APPROVED
A	7008713-0000	RELEASED	11-9-72	GRAHAM
B	1105-0002.1	ADDED J12	1-23-73	G. BURTON
C	7008713-0000	RELEASED	4-24-73	[illegible]

DEC FORM NO. MAC 1691

This drawing and specifications, herein, are the property of Digital Equipment Corporation and shall not be reproduced or copied or used in whole or in part as the basis for the manufacture or sale of items without written permission.

WIRE TABLE

ITEM NO.	DESCRIPTION AWG	COLOR	FROM POINT	FROM CONNECTION	FROM TERM	TO POINT	TO CONNECTION	TO TERM	REMARKS
5	#18 TWP	BLU	1	P1-9	7	12	—	6	
		BLK	2	P1-2		11	—		
4	#18 TWP	BLK	2	P1-2		15	—		
		RED	3	P1-3		16	—		
3	#18	RED	3	P1-3		9	—		
1	#22	YEL	4	P1-1		10	—		
2	#22	VIO	5	P1-6		8	—	6	
10	#22	BRN	6	P1-4		14	—	12	
11	#22	ORN	7	P1-5	7	13	—	12	

NOTES:

1. USE CABLE TIES (X) ITEM #9 AS SHOWN AND AT BREAK OUT POINTS WHERE NECESSARY.

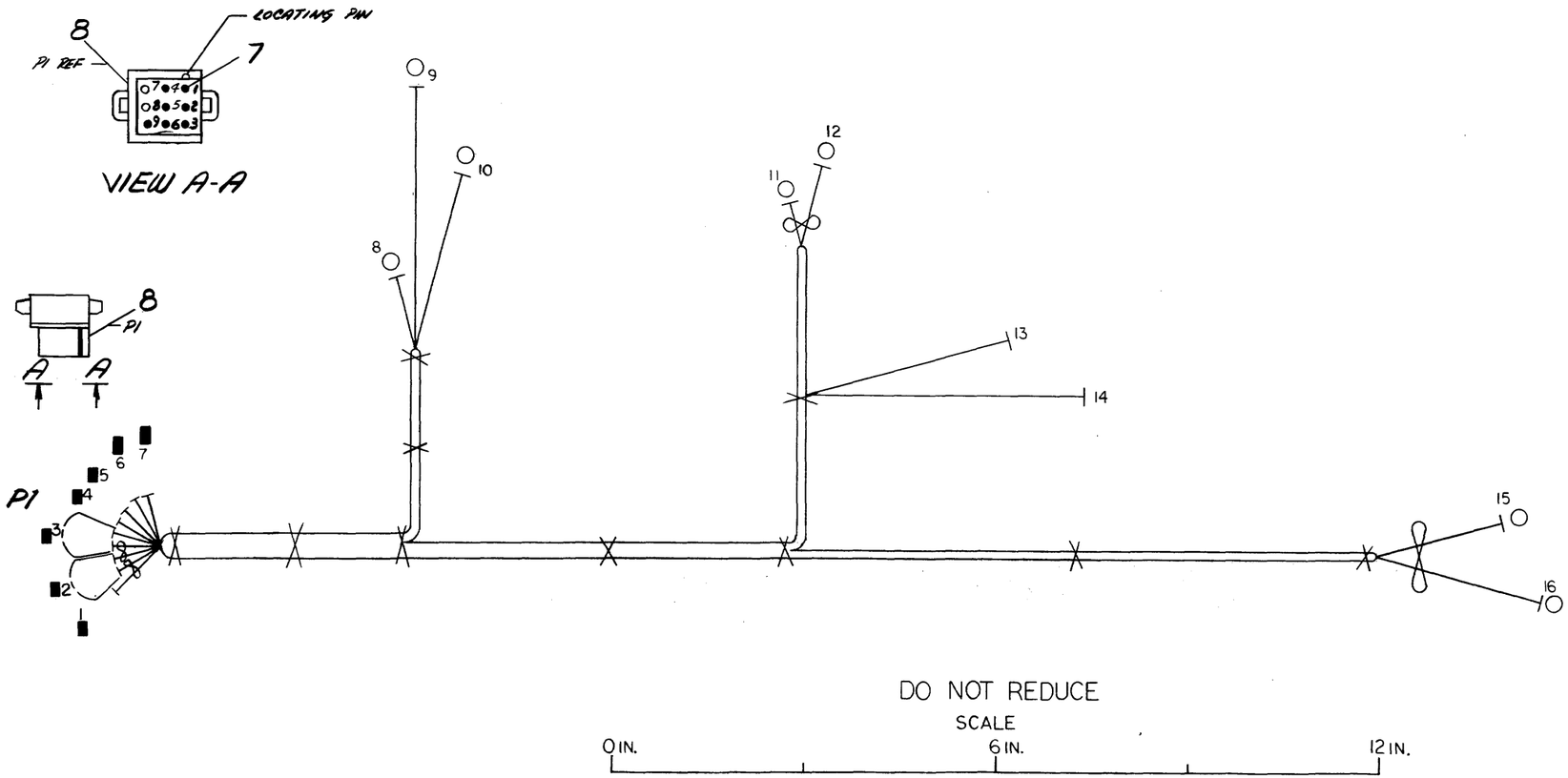

	QTY.	DESCRIPTION	PART NO.	ITEM NO.
	2	TERMINAL AMP #85952-3	9007655	12
	A/R	WIRE #22 AWG STRD (ORN)	9107350-33	11
	A/R	WIRE #22 AWG STRD (BRN)	9107350-11	10
X	A/R	TIE, CABLE PANDUIT SST 1.5M	9007880	9
P1	1	CONN., MATE-N-LOCK 9 PIN MALE	1209351-09	8
■	7	PIN, MATE-N-LOCK MALE	1209378-01	7
○	7	TERM., AMP TAB RED	9007917	6
	A/R	WIRE, #18 AWG STRD TWP BLU/BLK	9107430-06	5
	A/R	WIRE, #18 AWG STRD TWP RED/BLK	9107430-02	4
	A/R	WIRE, #18 AWG STRD RED	9107360-22	3
	A/R	WIRE, #22 AWG STRD VIO	9107350-77	2
	A/R	WIRE, #22 AWG. STRD YEL	9107350-44	1

PARTS LIST

FIRST USED ON OPTION/MODEL: PDP 11Ø5

UNLESS OTHERWISE SPECIFIED DIMENSION IN INCHES. TOLERANCES

DECIMALS	ANGLES
.XXX = .005	±0° 30'
.XX = .02	
.X = .1	

REMOVE BURRS AND BREAK SHARP CORNERS SURFACE QUALITY ✓

MATERIAL: SEE PARTS LIST

FINISH: —//—

DRN: KOBKHAUD — DATE: 2-28-72
CHK'D: C. Teschner — DATE: 3-7-72
ENG. — DATE: 5-3-72
PROJ. ENG. — DATE:
PROD. — DATE: 5/4/72

NEXT HIGHER ASSY.: D-UA-11Ø5-Ø-Ø

SCALE 1/1

SHEET 1 OF 1

digital EQUIPMENT CORPORATION MAYNARD, MASSACHUSETTS

TITLE: HARNESS DC (PDP 11Ø5)

SIZE D | CODE IA | NUMBER 7008856-0-0 | REV.

DIST.

REVISIONS: REV. | CHANGE NO. | CHK

DEC FORM NO DRD 100-A

This drawing and specifications, herein, are the property of Digital Equipment Corporation and shall not be reproduced or copied or used in whole or in part as the basis for the manufacture or sale of items without written permission.

NOTES:

1. CONNECTORS P1 AND P2 ARE TO BE WIRED POINT TO POINT (P1-1 TO P2-1 P1-2 TO P2-2 ECT.)

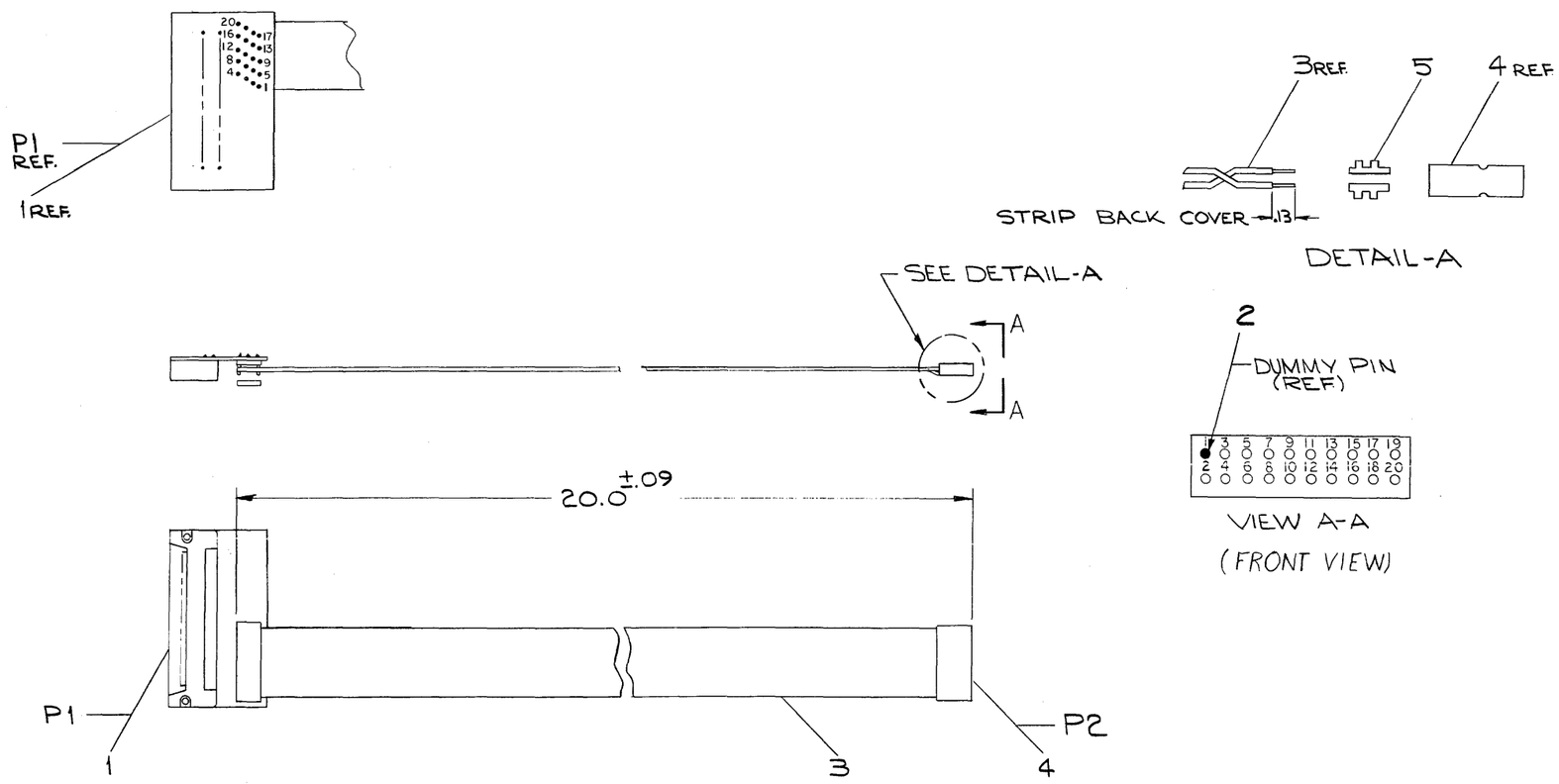

QTY.	DESCRIPTION	PART NO.	ITEM NO.
19	MINI-TERMINAL #47783 BERG	1210089-0	5
1	RECEPTACLE 20 PIN #65043-027 BERG	1210918-027	4
A/R	CABLE SCOTCHFLEX #3350 3M	9107747	3
1	DUMMY PIN #47900 BERG	9009140	2
1	D.C. DISTRIBUTION MODULE	5409949-0-0	1

PARTS LIST

FIRST USED ON OPTION/MODEL: PDP 11Ø5

UNLESS OTHERWISE SPECIFIED DIMENSION IN INCHES. TOLERANCES

DECIMALS	ANGLES
.XXX = .005 .XX = .02 .X = .1	±0° 30'

REMOVE BURRS AND BREAK SHARP CORNERS SURFACE QUALITY ✓

MATERIAL: SEE PARTS LIST

FINISH: —

		DATE
DRN.	[signature]	2-16-72
CHK'D.	C. Teschner	3-1-72
ENG.	David DeMoranville	3-24-72
PROJ. ENG.	[signature]	3-24-72
PROD.	R.K. Peters	3-24-72

NEXT HIGHER ASSY.: D-UA-11Ø5-0-0

SCALE: NONE

SHEET 1 OF 1

digital EQUIPMENT CORPORATION MAYNARD MASSACHUSETTS

TITLE: HEADER CABLE ASSY

SIZE	CODE	NUMBER	REV.
D	IA	7008820-0-0	A

DIST. 6

REVISIONS

CHK	CHANGE NO.	REV
[signature]	7008820-00001	A

DEMORANVILLE

DEC FORM NO DRD 100-A

This drawing and specifications, herein, are the property of Digital Equipment Corporation and shall not be reproduced or copied or used in whole or in part as the basis for the manufacture or sale of items without written permission.

J1 BERG HEADER ON P.C. CARD	J2 20 PIN 3M CONNECTOR	SIGNAL	OUTPUT CABLE (REFERENCE)
VV	9-12	GROUND	GROUND (A)
UU	9-12	GROUND	GROUND (B)
B	9-12	GROUND	GROUND (UU)
A	9-12	GROUND	GROUND (VV)
RR	16	SERIAL IN (TTL)	E
NN	15	20 MA INTERLOCK	H
LL	14	SERIAL IN (+20MA)	K
DD	5	SERIAL IN (-20MA)	S
V	7	SERIAL OUT (+20 MA)	AA
T	6	CLOCK IN (TTL)	CC
R	4	READER RUN (-20MA)	EE
N	3	CLOCK DISABLE (TTL)	HH
L	2	SERIAL OUT (-20MA)	KK
F	18	READER RUN (+20MA)	PP
D	19	SERIAL OUT (TTL)	SS
C	20	+5 VOLTS	TT
BB	8	+15 VOLTS	U

REVISIONS		
REV.	CHANGE NO.	CHK

BRUNING 40-107 15968

DEC FORM NO. DRC 100-A

FIRST USED ON OPTION/MODEL	QTY.	DESCRIPTION	PART NO.	ITEM NO.
PDP-11Ø5		PARTS LIST		

UNLESS OTHERWISE SPECIFIED DIMENSION IN INCHES. TOLERANCES

DECIMALS	ANGLES
.XXX = .005 .XX = .02 .X = .1	±0° 30'

REMOVE BURRS AND BREAK SHARP CORNERS SURFACE QUALITY ✓

MATERIAL —

FINISH —

DRN.		DATE 4-672
CHK'D. C. Teschner		DATE 4-672
ENG. Carol Le Mouveaux		DATE 4-672
PROJ/ENG.		DATE 4-672
PROD.		DATE

NEXT HIGHER ASSY. D-IA-5409949-ØØ

SCALE —

SHEET 1 OF 1

digital EQUIPMENT CORPORATION MAYNARD MASSACHUSETTS

TITLE

CIRCUIT SCHEMATIC

SIZE	CODE	NUMBER	REV.
C	CS	5409949-0-1	-

DIST.

SIZE C CODE CS NUMBER 5409949-0-1 REV. 1

This drawing and specifications, herein, are the property of Digital Equipment Corporation and shall not be reproduced or copied or used in whole or in part as the basis for the manufacture or sale of items without written permission.

WIRE TABLE	
FROM	TO
P1-A	P2-VV
P1-B	P2-UU
P1-C	P2-TT
P1-D	P2-SS
P1-E	P2-RR
P1-F	P2-PP
P1-H	P2-NN
P1-J	P2-MM
P1-K	P2-LL
P1-L	P2-KK
P1-M	P2-JJ
P1-N	P2-HH
P1-P	P2-FF
P1-R	P2-EE
P1-S	P2-DD
P1-T	P2-CC
P1-U	P2-BB
P1-V	P2-AA
P1-W	P2-Z
P1-X	P2-Y
P1-Y	P2-X
P1-Z	P2-W
P1-AA	P2-V
P1-BB	P2-U
P1-CC	P2-T
P1-DD	P2-S
P1-EE	P2-R
P1-FF	P2-P
P1-HH	P2-N
P1-JJ	P2-M
P1-KK	P2-L
P1-LL	P2-K
P1-MM	P2-J
P1-NN	P2-H
P1-PP	P2-F
P1-RR	P2-E
P1-SS	P2-D
P1-TT	P2-C
P1-UU	P2-B
P1-VV	P2-A

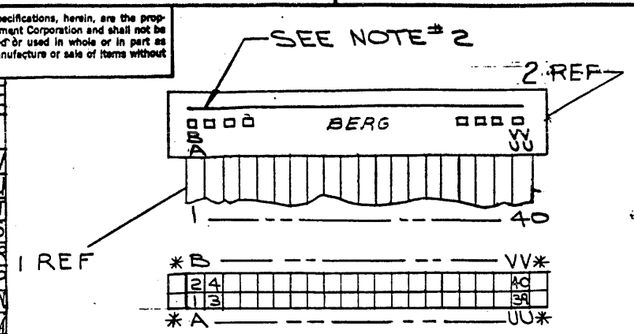

LEGEND

NUMBER	DIM "X" VAR	DIM Y (PRECUT) REF
BCØ8R-Ø1	1 FT ± 1 IN	1 FT .5 IN
BCØ8R-Ø6	6 FT ± 2 IN	6 FT .5 IN
BCØ8R-Ø8	8 FT ± 2 IN	8 FT .5 IN
BCØ8R-1Ø	1ØFT ± 2 IN	1ØFT .5 IN
BCØ8R-12	12 FT ± 3 IN	12 FT .5 IN
BCØ8R-2Ø	2ØFT ± 3 IN	2ØFT .5 IN
BCØ8R-25	25FT ± 3 IN	25FT .5 IN
BCØ8R-5Ø	5ØFT ± 1 FT	5ØFT .5 IN
BCØ8R-6Ø	6ØFT ± 1.2FT	6ØFT .5 IN
BCØ8R-75	75FT ± 1.5FT	75FT .5 IN
BCØ8R-AØ	1ØØFT ± 2 FT	1ØØFT .5 IN
BCØ8R-A3	13ØFT ± 2.6FT	13ØFT .5 IN
BCØ8R-A6	16ØFT ± 3.2FT	16ØFT .5 IN
BCØ8R-Ø3	3 FT. ± 1 IN	3FT. .5 IN
BCØ8R-Ø4	4 FT. ± 1 IN	4FT. .5 IN

NOTES:

~~1. CABLE TO BE WIRED POINT TO POINT. P1-A TO P2-VV, P1-B TO P2-UU, P1-C TO P2-TT ETC.~~

2. LINE & LEGEND TO BE HOT STAMPED (WHITE)
3. * DENOTES CAVITIES NOT USED OR DESIGNATED BY LETTERS.
4. VENDOR IDENTIFICATION, DEC PART NO. AND DATE CODE, TO BE HOT STAMPED (WHT), SHIELD SIDE, IN THIS APPROX. AREA.
5. THIS CABLE MUST CONFORM TO THE INSPECTION REQ'S OF DEC. A-II-7007035 UPON RECEIPT AT DEC INCOMING INSPECTION
6. A BERG ELECTRONICS #HT 68 CRIMP TOOL MAY BE USED.

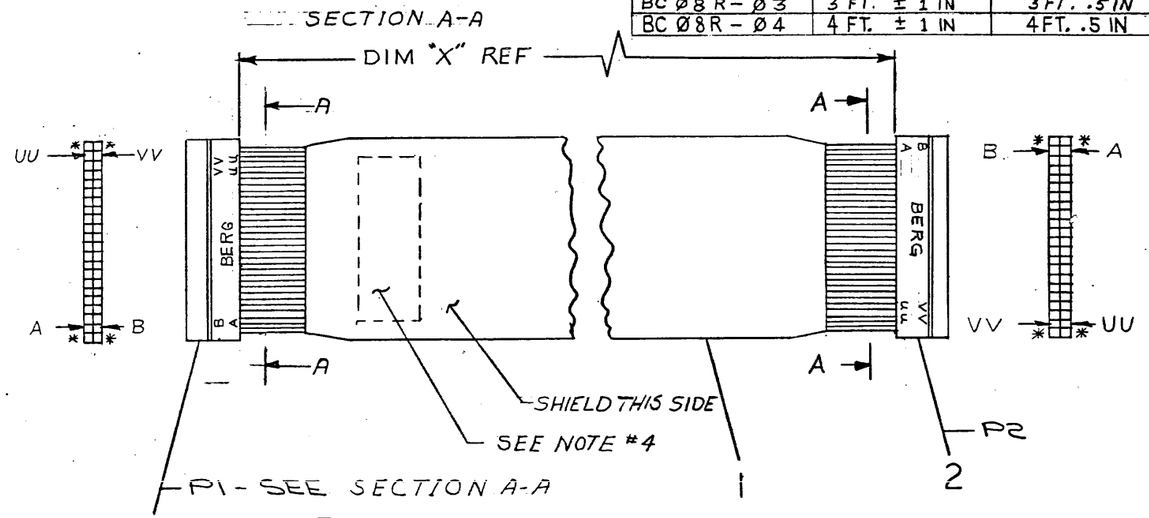

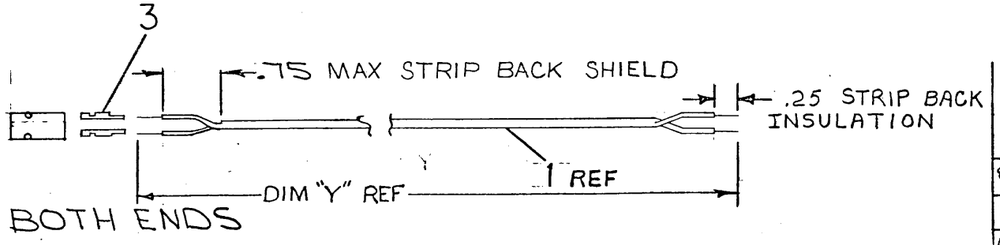

| REVISIONS | | |

DIGITAL EQUIPMENT CORPORATION
MAYNARD, MASSACHUSETTS

ACCESSORY LIST

MADE BY E. Pellegrini	CHECKED C. Teschner	SECTION
DATE 5/26/72	DATE 5-31-72	
ENG B.D. Wicks	PROD R.K. Peterson	ISSUED SECT.
DATE 5-31-72	DATE 5/31/72	

LEGEND

D DOCUMENT
DN DOCUMENT CHANGE NOTICE
PA PAPER TAPE ASCII
PB PAPER TAPE BINARY
PM PAPER TAPE READ-IN-MODE

ITEM NO.	DWG NO./PART NO.	DESCRIPTION	QUANTITY/VARIATION: ALL MODELS							KIT CHECK BY ____ DATE ____	INSTALLATION CHECK BY ____ DATE ____
1	7008360-0-0	CABLE ASSEMBLY	1								
2	11/05-0	CUSTOMER PRINT SET	1								
3	DEC-11-H05AA-A-D	MAINTENANCE MANUAL	*								
4	LIBKIT 11/05 BASEA-A-K	BASIC DIAGNOSTIC KIT	*								
5	LIBKIT 11/05 XBASA-A-K	SYSTEM SOFTWARE KIT	*								

*NOTE: THESE ITEMS ARE TO BE SHIPPED ONLY WHEN SHOWN ON THE CONSTRUCTION REQ.

TITLE	ASSY. NO.	SIZE	CODE	NUMBER	REV.	ECO NO
PDP-11/05 ACCESSORY LIST	11/05-0-0	A	AL	11/05-0-4		
	SHEET 1 OF 1	DIST				

DEC 16-(325)-1075-N172 DRA 121

DIGITAL EQUIPMENT CORPORATION
MAYNARD, MASSACHUSETTS

SOFTWARE LIST

MADE BY E. Pellegrini	CHECKED C. Teschner	SECTION
DATE 5/30/72	DATE 5-31-72	
ENG S.D. Wecker	PROD R.K. Peterson	ISSUED SECT.
DATE 5-31-72	DATE 5/31/72	

LEGEND

D	DOCUMENT
DN	DOCUMENT CHANGE NOTICE
PA	PAPER TAPE ASCII
PB	PAPER TAPE BINARY
PM	PAPER TAPE READ-IN-MODE

ITEM NO.	DWG NO./PART NO.	DESCRIPTION	QUANTITY/VARIATION ALL MODELS
1	LIBKIT 11/05 BASEA-A-K	BASIC DIAGNOSTIC KIT	*
2	LIBKIT 11/05 XBASA-A-K	SYSTEM SOFTWARE KIT	*
		NOTE: THESE ITEMS ARE TO BE SHIPPED ONLY WHEN SHOWN ON THE CONSTRUCTION REQ.	

KIT CHECK BY _____ DATE _____

INSTALLATION CHECK BY _____ DATE _____

TITLE	ASSY. NO.	SIZE	CODE	NUMBER	REV.	ECO NO
PDP-11/05 SOFTWARE LIST	11/05-0-0	A	SL	11/05-0-05		
	SHEET OF	DIST.				1

DEC FORM NO. DEC 16-(327)-1049-N471
DRA 120

This drawing and specifications, herein, are the property of Digital Equipment Corporation and shall not be reproduced or copied or used in whole or in part as the basis for the manufacture or sale of items without written permission.

DIGITAL EQUIPMENT CORPORATION
MAYNARD, MASSACHUSETTS

ENGINEERING SPECIFICATION

DATE 10/9/72

TITLE ACCEPTANCE PROCEDURE FOR BASIC PDP1105

REVISIONS

REV	DESCRIPTION	CHG NO	ORIG	DATE	APPD BY	DATE

ENG	APPD	SIZE	CODE	NUMBER	REV
		A	SP	11/Ø5-Ø-6	

DEC FORM NO. DRA 107

ENGINEERING SPECIFICATION digital CONTINUATION SHEET

TITLE ACCEPTANCE PROCEDURE FOR BASIC PDP1105

1.0 SCOPE

1.1 This procedure establishes the minimum mechanical and electrical standards that a PDP11/05 must meet to be considered acceptable for shipment.

1.2 Any basic PDP11/05 that fails any portion of this procedure may be returned to production for correction of the discrepancy at the discretion of the acceptance supervisor. Upon resubmission of product acceptance, the PDP11/05 may be subjected to this entire procedure or portion thereof; provided no one step of this procedure is omitted.

2.0 INITIAL VERIFICATION

2.1 All PDP11/05's should have the T-17 (DØQE or latest revision) diagnostic in core when the machine is submitted to acceptance.

2.1.1 Plug the power cord of the PDP11/05 into the appropriate AC outlet.

2.1.2 Depress halt switch.

2.1.3 Turn the key switch to power on.

2.1.4 Set the switch register of the PDP11/05 to 200 (8).

2.1.5 Ensure that both fans turn.

2.1.6 Depress the "load address" switch.

2.1.7 Put switches 11 and 15 in the up position and switch 8 in the down position.

2.1.8 Depress the "Start" switch.

2.1.9 After the PDP11/05 has been running for the time specified in Table 1 without halting, depress the "halt" switch. The machine should halt.

2.1.10 Turn off the key switch and remove the AC cord from the power outlet.

2.2 Should the basic PDP11/05 fail to meet the requirements of 2.0, one reloading of the diagnostic will be allowed. (See 9.1 and 9.4.1.1 to 9.4.1.8). Should the PDP11/05 then fail to run properly as described in 2.1.1 to 2.1.10, it shall be rejected and returned to production for repair.

3.0 MECHANICAL INSPECTION

3.1 Description of sides.

3.1.1 Front side shall be the console side.

3.1.2 The right side shall be the side on the right when looking at the PDP11/05 from the front.

SIZE	CODE	NUMBER	REV
A	SP	11/Ø5-Ø-6	

DEC FORM NO DEC 16-(381)-1022-N370
DRA 108

3.2 Inspect the unit for conformance to "Hardware Assembly Standard" A-SP-7665099-0-0.

3.3 With the PDP11/05 chassis on its right side, check the bottom of the chassis for:

3.3.1 Four (4) Phillips head screws with internal lock washers securing the power supply chassis to the PDP11/05 chassis.

3.3.2 Three (3) Phillips head screws with internal lock-washers securing the logic to the chassis.

3.3.3 Four (4) Phillips head screws with internal lock-washers holding the module guides in place.

3.4 With the PDP11/05 chassis on its bottom, check the left side for:

3.4.1 Six (6) Phillips head screws with internal lock-washers securing the card guide supports.

3.4.2 Side cover should have foam against the module handle. This cover is secured to the chassis with four (4) Phillips head screws with internal lockwashers.

3.4.3 Console cable should be routed to avoid damage from module handles.

3.5 Check the 54-9728 regulator module for six (6) Phillips head screws securing the module to the power supply chassis, these screws are located on the top of the module, one on each corner of the heat sink and one at each corner of the module at the end closest to the transformer.

3.5.1 Make sure the regulator module is not bowed.

3.6 All wires must be tied neatly using cable ties.

3.7 Make sure that two (2) plastic cable clamps have been used to dress the AC harness wires coming from the AC input box and going to the power supply fan and the key switch.

3.8 The remaining wires should be supported by two (2) more cable clamps along the left side of the power supply chassis

3.9 Check all crimp connections by pulling gently on the wires entering the crimp. There should be no signs of looseness. The stranded wire should be exposed beyond the crimp approximately 1/16".

3.10 Check the male tabs to which the crimp connector attaches for cold solder joints and flux.

3.11 Insure that an acceptance stamp appears on the top of the logic indicating that the logic has been tested by the AWT.

3.12 All units must be free of all loose hardware.

3.13 Inspect the AC power cord. The cord must be free from cuts, burns and abrasions.

3.14 There should be two (2) Phillips head screws with internal lockwashers securing the AC input box to the chassis.

3.15 The rear fan screw should not be missing, bent, or damaged in anyway.

3.16 The rear fan must be secured to the rear screen assembly by four (4) Phillips head screws with internal lockwashers.

3.17 A second cable clamp should be attached to the left rear of the chassis, across the cable access hole.

3.18 Failure Determination

3.18.1 Any PDP11/05 that fails to meet the criteria in 3.0 with the exceptions of 3.9 and 3.10 will be documented as a recycle, but the failure may be corrected in the acceptance area by a person (s) from production.

3.18.2 Any PDP11/05 that fails to meet the criteria out-lined in 3.9 and/or 3.10 must be documented as a recycle and returned to the production area for correction of the discrepancy. Before the unit is returned to acceptance, a quick verify must be run in production.

4.0 MODULE INSPECTION AND LOGIC BLOCK CHECK

4.1 Remove and inspect all modules except power supply for con-formance to the specifications listed.

4.1.1 "Final Module Inspection Procedure" A-SP-7665039

4.1.2 "Module Rework Standard" A-SP-7605845

4.1.3 Memory Circuit Boards - Acceptance Standards - A-SP-7665052

4.2 Visually inspect the top of the 54-9728 regulator module for conformance to the specification listed in 4.1.1 and 4.1.2.

4.3 Check the modules for a circuit revision letter and an etch revision letter. These revision letters must be up to shippable ECO levels. A three (3) digit numeric date code must be present on the module handle. If ECO levels are correct, sign the ECO status sheet.

4.3.1 Check the component lead length on side 2 of each module. The leads must not protrude more than 1/16.

4.3.2 Make sure all "ROM's" are marked for identification and ensure the markings are legible.

4.3.3 Make sure the pot on the G110 module is glyptolled to prevent a change in strobe setting.

4.3.4 Make sure the serial number stamped on the three (3) memory modules matches the number on the systems tag.

4.4 When the modules have been removed from the logic block, inspect the logic block.

4.4.1 Any chip or crack which could conceivably allow a shorting of two or more logic pins will not be acceptable.

4.5 Replace the modules in the block in their proper slots.

5.0 POWER & GROUND CHECK

5.1 Make sure the PDP11/05 is not plugged into an AC power source.

5.2 Check chassis ground.

5.2.1 Set a Simpson Module 362 ohmmeter or equivalent to the adjust setting and zero the meter.

5.2.2 Set the Simpson Module 362 ohmmeter to the ground pin on the AC power cord.

5.2.4 Put the other lead of the ohmmeter to the ground lug on the logic block. The ohmmeter should read less than 1Ω.

5.2.5 Remove the lead from the ground lug and put it to the screw on the heat sink of the regulator module that is surrounded by bare metal. The ohmmeter should read less than 1Ω.

5.2.6 Remove the lead from the screw on the regulator module and put it on a screw on the PDP11/05 chassis. The ohmmeter should read less than 1Ω.

5.2.7 Remove both ohmmeter leads.

5.3 Power Supply Check

5.3.1 Plug the power cord of the PDP11/05 into an appropriate AC outlet.

5.3.2 Turn on the key switch on the PDP11/05 console.

5.3.3 Using a Dixson VT-200 meter or its equivalent, measure the power supply voltages on the logic backplane. See attachment 1 for lead placement and voltage tolerances. Record voltages on checklist. (Attachment # 5.)

5.4 Failure Determination

5.4.1 If any PDP11/05 fails any portion of 5.0, it shall be documented as a recycle and returned to production for repair.

5.4.2 Upon resubmission to acceptance the PDP11/05 will be visually inspected to ensure all hardware is present and the PDP11/05 will be required to pass 5.0.

6.0 QUICK VERIFY

6.1 Remove terminator per table two and connect the PDP11/05 to a daughter station then connect the teletype to the 11/05 under test.

6.2 Set the program select register switches to reflect the memory size of the PDP11/05 under test (See Table # 4).

6.3 Set the "mode" switch to processor.

6.4 Set the "function" switch to quick verify.

6.5 Set the "type" switch to 11/05.

6.6 Turn on power to the PDP11/05 and put the "enable/halt" switch in the enable position.

6.7 Momentarily depress the "initialize" switch on the daughter station.

6.8 A pass complete message should appear when test is finished.

6.9 Disconnect the 11/05 from the daughter station and replace the terminator.

6.10 Failure Determination

6.10.1 Should the PDP11/05 not run the quick verify properly after the first load, the machine will be documented as a recycle and returned to production for repair.

7.0 CONSOLE TEST

7.1 Depress "enable/halt" switch.

7.2 Turn on power to the PDP11/05.

7.2.1 Load Address 100_8.

7.3 Set "052525" in the switches and lift "DEPosit".

7.4 Set "125252_8" in the switches and lift "DEPosit".

7.5 Load address 100_8.

7.6 Depress and release EXAMINE.

7.7 The address/data display should contain "052525_8".

7.8 Depress and release EXAMINE.

7.9 The address/data display should contain "125252_8".

7.10 Load address 100_8.

7.11 Set "000777_8" in the switches and lift DEPOSIT.

7.12 Put "enable/halt" switch in ENABLE position.

7.13 Depress and release "START" switch. The RUN light should light.

7.14 Turn console key to PANEL LOCK position.

7.15 Put ENABLE/HALT switch in HALT position. The RUN light should remain lit.

7.16 Turn console key to "POWER" position. The PDP11/05 should halt.

7.17 Failure Classification

7.17.1 Any PDP11/05 that fails to pass 7.1 to 7.16 shall be documented as a recycle and returned to production for repair.

7.17.2 Upon resubmission to acceptance, the PDP11/05 may, at the discretion of the acceptance supervisor, be required to pass 24 hours of burn-in.

7.18 Paper Tape Load

7.18.1 Determine start address and load at that address.
4K = 17744
8K = 37744
12K= 57744
16K= 77744

7.18.2 Load bootstrap loader per PDP11 instruction card.

7.18.3 Load start address as in 7.18.1

7.18.4 Read in absolute loader paper tape from teletype.

7.18.5 Load start address as follows:
4K = 17500

8K = 37500
12K = 57500
16K = 77500

7.18.6 Load MAINDEC-11-DØMA (T13) thru teletype.

7.18.7 Load 200 ($_8$).

7.18.8 Put switch 15 up and start.

7.18.9 Allow program to run one pass (One TTY bell). It will halt on error.

7.18.10 Shut off machine and proceed with the next test.

8.0 UNIBUS TESTER

8.1 Insert the unibus cable coming from the unibus tester into the appropriate logic slot in the PDP11/05. First remove terminator from the slot in the PDP11/05. See Table II.

8.2 Plug the PDP11/05 into an appropriate AC power source.

8.3 Turn on power to unibus tester.

8.4 Turn on the power to the PDP11/05.

8.5 If machine has only 4K of memory:

8.5.1 Load unibus test program (Octal number 143).

8.5.2 Load address 200 ($_8$).

8.5.3 Depress START

8.5.4 Program will run continuously without typeout until stopped by operator. Let the program run for 30 minutes. If program fails, it will halt.

8.6 If machine has 8K or more of memory"

8.6.1 Load GTP program (Octal number 135)

8.6.2 Load address 200 ($_8$).

8.6.3 Set bits 0 through 15 up.

8.6.4 Set bits 4, 8, 9 and 14 down and press start.

8.6.5 Set bits 0 through 15 up and press continue two times.

8.6.6 Set bits 0 through 15 down and press continue.

8.6.7 Program will run continuously with typeout until stopped by operator. Let the program run for 30 minutes. If program fails, it will halt and type out error message.

8.7 Power Down Sequence

8.7.1 Halt the 11/05.

8.7.2 Turn key switch of 11/05 to OFF.

8.7.3 Take daughter station off line.

8.7.4 Remove unibus cable and replace terminator.

8.7.5 If desired, you may shut off the unibus tester.

9.0 ELECTRICAL ACCEPTANCE

This test is to be run in the heat box at high temperature.

9.1 Connecting the PDP 11/05 to a daughter station.

9.1.1 Remove the terminator from the slot in the PDP11/05 logic block. (See Table #2).

9.1.2 Insert the unibus cable from the daughter station into the slot in the PDP11/05 logic block specified in Table #2.

9.1.3 Connect the teletype to the Berg connector on the back of the PDP11/05 chassis.

9.1.4 Plug the power cord on the PDP11/05 into an appropriate AC outlet.

9.2 PDP11/05 Diagnostic Testing

9.2.1 The normal mode of diagnostic testing for the PDP11/05 shall be the automatic acceptance method described in 9.3. An alternate method of diagnostic testing is described in 9.4. This method shall be used in the event of an automatic acceptance system hardware failure and must have the acceptance supervisor's approval.

9.3 Automatic Acceptance

9.3.1 Set the "type" switch to 11/05-1.

9.3.2 Set the "mode" switch to processor.

9.3.3 Set the "function" switch to auto accept.

9.3.4 Set the "on line" switch to the UP (one) position. The on line light should be lit.

9.3.5 Set the "heat" switch and the "repeat" switch to the UP (one) position.

9.3.6 Set the program select register switches to reflect the memory size of the PDP11/05 under test (See Table #4).

9.3.7 Depress the initialize switch momentarily.

9.3.8 Check to make sure no error lights are lit. If one is, halt the PDP11/05 and repeat 9.3.1 to 9.3.7 once. If an error light is lit after the second loading attempt, the machine will be recycled and subject to 10.0.

9.3.9 After approximately 1 hour, 45 minutes for 4K and 3 hours 45 minutes for 8K, the TTY should print out a pass complete message.

9.3.10 Load the T17 diagnostic (Section 9.4.1.8)

9.3.11 Verify program runs in machine.

9.3.12 Remove machine from acceptance station.

9.4 Automatic Acceptance Backup

9.4.1 **This section is to be used as back up if the auto accept function of the test line is not working.**

9.4.1.1 Manually set the octal location of the program to be run in the program select register. (See Table #3).

9.4.1.2 Set the "type" switch to 11/05-1.

9.4.1.3 Set the "mode" switch to processor.

9.4.1.4 Set the "function" switch to dump.

9.4.1.5 Set the "on line" switch to the UP (one) position.

9.4.1.6 Set the "heat" and "repeat" switches to UP (one) position.

9.4.1.7 Momentarily depress the "initialize switch.

9.4.1.8 Make sure no error lights are lit. If one or more error lights are lit, repeat steps 9.4.1.1 to 9.4.1.7 once. If an error light is lit after the second loading attemp, the machine will be recycled and subject to 10.0.

9.4.1.9 Set the PDP11/05 switch register to 200. Depress load address. Depress START.

9.4.1.10 Program should be running. Run the program the required length of time (See Table #3).

9.4.1.11 Load the next program listed in Table #3 as in steps 9.4.1.1 to 9.4.1.16.

9.4.2 All programs listed in Table 3 must be run in the order listed.

9.4.3 Load the PDP11/05 memory with the modified T17 diagnostic before sending machine to final inspection area.

9.4.4 Remove the unibus cable and insert the terminator. (see Table #2).

9.5 50 Cycle Conversion

9.5.1 If a machine must be converted to 50 cycle, it will be done after auto accept but before touch up.

9.5.2 After conversion, run the following tests:
A. Power and ground per paragraph 5.0.
B. GTP with power fail option (if only 4K, run T-17 and power fail).

9.6 Failure Classification

9.6.1 Any PDP11/05 that fails 9.4.0 or 9.5.2 will be documented as a recycle and will be returned to production for repair.

9.6.2 Upon resubmission to acceptance, the PDP11/05 may, at the discretion of the acceptance supervisor, be required to pass 24 hours of burn-in.

9.6.3 See next page.

10.0 DOCUMENTATION AND FAILURE CLASSIFICATION (con't)

10.1 Each system accepted against section 9.0 (Electrical Acceptance) of this procedure must have a completed log sheet and a PDP11/05 basic acceptance checklist added to its test and inspection envelope. See attachments.

10.2 Any unit which fails to properly run diagnostics according to MAINDEC documents other than continuously and as specified will be classified defective and returned to production for rework. Printouts, if generated will be returned to production with the PDP11/05.

10.3 Any system which has had any major modification as listed below; must be recycled through the entire production checkout procedure (including the heat cycle) prior to resubmission to the acceptance area. These machines will be required to undergo another 24 hours burn-in.
A. Power Supply replacement.
B. Memory System replacement.
C. Any module replacement in the processor or the front panel.

9.6.3 Any PDP11/Ø5 that only fails T166 (KW11-L) during auto acceptance will have T166 loaded as described in sections 9.4.1.1 - 9.4.1.1Ø. If the program runs for 1Ø minutes the PDP11/Ø5 shall be considered as having passed section 9.3 (Auto Acceptance).

10.3.1 The front panel may have switches and/or LED's replaced and must undergo a Quick Verify only.

11.0 PREPARING MACHINES FOR SHIPMENT

11.1 All paperwork (logics, checklists, etc.), will be complete before the PDP11/05 leaves the electrical acceptance area.

11.2 Load the machine with T17 (4K) or GTP (8K or more), before sending to touch-up.

12.0 MECHANICAL TOUCH-UP

12.1 The PDP11/05 will be sent to the production touch-up area. The PDP11/05 will have minor mechanical defects corrected (keys put with the machine) and installed in a cabinet if necessary.

12.2 All hardware (chassis, tracks, etc.) will be secured to the chassis. The cover to the PDP11/05 will not be secured at this time. This will allow the final visual inspection of the PDP11/05 to be performed.

13.0 FINAL ACCEPTANCE

13.1 The test and inspection envelope of each PDP11/05 submitted to final acceptance must have lines #1 through #8 signed off. The envelope will contain the following:
A. Key Sheet (original and at least 6 copies).
B. Electrical acceptance checklist.
C. Progress reports.
D. ECO Status Sheets (white, pink and blue copies).
E. Waiver if needed (white, pink, and yellow copies).
F. Blanket waiver if needed (2 copies).
G. Construction Requisition (green copy).
H. Transfer sheet.

13.2 Check for 100% agreement between the key sheet, construction requisition, physical unit and print set.

13.3 If the documentation outlined in 13.1 through 13.3 is missing, incorrect, or incomplete, the system will be classified as being "down" and will not proceed any further until all documentation has been completed by the responsible production person (s).

13.4 Visually inspect the PDP11/05.

13.4.1 Ensure that all hardware is present and tight.

13.4.2 Check all decals for readability. If decal has missing letters or is illegible, the decal must be replaced.

13.4.3 Patent decal.
13.4.4 The unit must be free of all foreign matter.
13.4.5 Insure that the unit has keys secured to the power cord with a tie wrap.
13.4.6 Move each switch up and down at least two (2) times to ensure each switch is unrestricted and operates freely.
13.4.7 Missing letters and chipped areas will not be allowed on silk screening.
13.4.8 Inspect each basic PDP11/05 for conformance to DEC STD 092 and recycle units to touch-up as required.
13.4.9 Check for foam on side cover.
13.4.10 Check to assure console cable is folded under the memory stack handle.
13.4.11 Check for unibus cable clamp and "handle".
13.4.12 Have top cover secured to the chassis, and sealed.
13.4.13 Check the power cord for cuts, abrasions, etc.

13.5 Electrical Verification

13.5.1 Complete one pass of the program in memory (T-17) for 4K of GTP for 8K and more. Exercise both TTY reader and punch while making a pass.

13.5.2 Console test run per paragraph 7.0.

13.5.3 Failure Classification

13.5.3.1 Any PDP11/05 that fails 13.5.1 or 13.5.2 will be documented as a recycle and returned to production for repair.

13.5.3.2 The acceptance supervisor will determine what must be run against the recycled unit when it is returned to acceptance.

13.5.3.3 Turn ON/OFF switch several times. Test should continue without error.

13.6 Supplementary Accessory Checklist

13.6.1 This form will be filled in by the final inspector.

13.6.1.1 The form will contain all software, prints, and accessories going to a customer.

13.6.1.2 After completing the form, it should be signed by the inspector and inserted in the T. & I. envelope.

13.7 Separating the paperwork in the T. & I. envelope.

13.7.1 All the paperwork in the T. & I. envelope will be taken out of the envelope and separated.

13.7.1.1 Take the key sheet (two copies) the accounting form, and the green copy of the construction requisition, clip them together and put them in a separate pile.

13.7.1.2 Take the test data, progress reports, final inspection reports, key sheet (one copy) and clip them together.

13.7.1.3 Put these papers in another pile. Get our copy of the construction requisition and attach key sheet (one copy) waiver, (white, and pink copy if needed) and clip them together. Take these papers to Field Service where they will type up the customer envelope

13.7.1.4 Take the pink copy of ECO status sheet and the Supplementary Accessory check list and insert in the customer envelope.

13.7.1.5 Have production stick the "silly sticker" on the top of the PDP11/05.

13.7.1.6 Have the PDP11/05 moved next to the software that will be shipped with the unit.

13.8 A shipping tag must be made out for each box (listing the contents) or unpacked article. (See attachment #4).

13.9 Accessories shipped with each PDP11/05.

13.9.1 All basic PDP11/05 computers will be shipped with the following:

13.9.1.1 Prints

13.9.1.2 Manuals

13.9.1.3 Customer envelope

13.9.1.3.1 Contents of customer envelope will include:

a. ECO Status Sheet (pink copy)
b. Supplementary Accessory Checklist.
c. Customer Acceptance Sheet
d. Key Sheet

13.9.1.3.2 After the customer envelope has been check for contents, it will be sealed and placed in the software box.

13.10 Items shipped if required by the construction requisition.

13.10.1 Basic Software and Accessory List.

13.10.1.1 LIB KIT 11/05 BASEA-A-K

13.10.2 Extended software and accessory list.

13.10.2.1 LIB KIT 11/05 XBASA-A-K

13.10.3 If the basic PDP 11/05 is to be shipped with a teletype, it must also include the teletype accessory list.

13.10.3.1 Teletype accessories include:

a. 310B Teletype Manual Vol. I
b. 310B Teletype Manual Vol. II
c. 1184B Teletype Parts List
d. 36-5365 1 roll of teleprinter paper
e. 36-5630 1 each teletype ribbon
f. 36-5360 3 each rolls of oiled paper tape
g. F4/e/69/260 paper price list.

13.11 After software, accessory hareware, print set, and customer envelope have checked, put them in the software box and seal it.

13.12 Check the contents of the T. & I. envelope for:

a. The remaining Key Sheets
b. ECO Status Sheets (pink copies)
c. Waiver if needed (yellow copy)
d. Blanket waiver if needed.

13.13 Before line #10 on the T. & I. envelope is signed off, an authorized person from computer administration must sign his name and the date across the side of the T. & I. envelope

13.14 Basic PDP11/05 destined for in-house users (CSS, TPL, System Integration) will not have lines 9 and 10 signed off on the T. & I. envelope.

13.14.1 Other items not applicable to the in-house machine include: 13.6, 13.7.1.3, 13.7.1.4, 13.8 and 13.9.1.3.

13.15 The final acceptance line on the DEC 101 cover sheet (line #10) will only be signed off if all items in this procedure have been accepted for formally waivered (DEC Form 12-1026).

13.16 Failure Determination

13.16.1 Any unit which fails any of the requirements of this section will be classified defective and returned to production for the correction of any deficiencies.

13.16.2 All units resubmitted for final inspection after the correction of a deficiency may be recycle through the entire inspection procedure or any portion thereof at the discretion of the Q.C. supervisor provided no one (1) step of section 13 is omitted from any unit.

14.0 PDP11/05 RETURNED FROM CRATING (SHIPPING)

14.1 Any PDP11/05 that is returned from crating (shipping) need only be submitted to 13.0 provided the PDP11/05 remains sealed in its shipping container. The PDP11/05 need not be submitted to 13.4 and 13.5.

15.0 VALIDATION OF SOFTWARE

15.1 10% of all software kits will be opened and the contents of the kits will be checked.

15.2 100% of the software kits will have their labels checked for correct revision levels.

15.3 If any software fails 15.1 and/or 15.2 the complete lot of software will be returned to the program library.

15.4 Assure that all documentation being shipped is at the same rev. as the hardware.

DUMP DIRECTORY

FRG #	END ADD	TITLE	DESC'N
ØØØØØØ	Ø142Ø2	DØAAØ	T1
ØØØØØ1	Ø04326	DØBAØ	T2
ØØØØØ2	ØØ5512	DØCAØ	T3
ØØØØØ3	Ø1636Ø	DØDAØ	T4
ØØØØØ4	Ø1Ø546	DØEAØ	T5
ØØØØØ5	Ø17214	DØFAØ	T6
ØØØØØ6	Ø1364Ø	DØGAØ	T7
ØØØØØ7	Ø13424	DØHAØ	T8
ØØØØ1Ø	Ø14116	DØIAØ	T9
ØØØØ11	ØØ7462	DØJAØ	T1Ø
ØØØØ12	ØØ711Ø	DØKAØ	T11
ØØØØ13	Ø157Ø6	DØLAØ	T12
ØØØØ14	ØØ3234	DØMAØ	T13
ØØØØ15	ØØ7566	DØNCØ	T14
ØØØØ16	Ø16476	DØOB2	T15
ØØØØ17	Ø15514	DØQE2	T17
ØØØØ2Ø	ØØØ2ØØ	DUMM21	LDR
ØØØØ21	ØØØ2ØØ	D1AAØ	ADR UP
ØØØØ22	ØØØ2ØØ	D1BAØ	ADR DN
ØØØØ23	ØØ14ØØ	ZMMCAØ	N/D AD
ØØØØ24	ØØØ652	ZMMDAØ	BASICP
ØØØØ25	ØØØ636	ZMMEA1	MC1SØS
ØØØØ26	ØØØ75Ø	ZMMFAØ	1'S SU
ØØØØ27	ØØ1316	ZMMGB1	WCN'S
ØØØØ3Ø	ØØØ542	ZMMHAØ	C/HTNG
ØØØØ31	ØØØ716	ZMMIAØ	RANDAT
ØØØØ32	ØØØ426	ZMMKIØ	ADR DN
ØØØØ33	ØØ3Ø46	ZQMAA1	MEMEXR
ØØØØ34	ØØ1646	CMSAAØ	MEMPAR
ØØØØ35	ØØØ2ØØ	CMSBAØ	GALOMP
ØØØØ36	ØØ66Ø6	ZQMBA1	EXTMEM
ØØØØ37	ØØØ2ØØ	LDR	LDR
ØØØØ41	ØØØ2ØØ	DUMMY	LDR
ØØØØ42	ØØ3132	ZTMBØØ	TM-9TK
ØØØØ43	ØØ3252	ZTMCØØ	TM-7TK
ØØØØ44	ØØ254Ø	CKBAAØ	SXT
ØØØØ45	ØØ3562	CKBBAØ	SOB
ØØØØ46	ØØ7366	CKBCAØ	XOR
ØØØØ47	ØØ7234	CKBDAØ	MARK
ØØØØ5Ø	ØØ2174	CKBEAØ	RTT
ØØØØ51	ØØ1712	CKBFAØ	STKLIM
ØØØØ52	ØØ1424	CKBGAØ	SPL
ØØØØ53	ØØ374Ø	CKBHAØ	REGSET
ØØØØ54	Ø1355Ø	CKBIAØ	ASH
ØØØØ55	Ø1466Ø	CKBJAØ	ASHC

TABLE #3

PROGRAM SELECT REGISTER SETTINGS REQUIRED TO RUN AUTO-ACCEPT OR QUICK VERIFY

MEMORY SIZE	SWITCH NUMBER 4	3	2	1	0
4K	0	0	0	0	0
8K	0	0	0	0	1
12K	0	0	0	1	0
16K	0	0	0	1	1

TABLE #4

MEASUREMENT OF POWER SUPPLY OUTPUT

POWER SUPPLY VOLTAGE	POWER SUPPLY VOLTAGE LIMITS	RED METER LEAD	BLACK METER LEAD
+5V	5.00 - 5.10V	Red crimp connector on logic block.	Black crimp connector on logic block.
+15V	14.75 - 15.25	Orange term point connector on logic block.	Black crimp connector on logic block.
-15V	14.75 - 15.25	Blue crimp connector on logic block.	Black crimp connector on logic block.

ATTACHMENT #1

ENGINEERING SPECIFICATION digital CONTINUATION SHEET

TITLE ACCEPTANCE PROCEDURE FOR BASIC PDP1105

SHIPPING TAGS

DEC# _____

ITEM _____ OF _____

SIGNATURE _____

FOR DOMESTIC SHIPMENTS

FOR FOREIGN SHIPMENTS

CUSTOMER _____

DEC# _____

SERIAL# _____

ITEM# _____

TOTAL UNPACKED PIECES _____

DESCRIPTION:

PACKED BY

SHIPPED BY _____

_____ OF _____ PIECES

ATTACHMENT #4

	SIZE	CODE	NUMBER	REV
	A	SP	11/Ø5-Ø-6	

ENGINEERING SPECIFICATION digital CONTINUATION SHEET

TITLE ACCEPTANCE PROCEDURE FOR BASIC PDP11/05

CUSTOMER	SLOT #	DEC #	System Type & Serial #	PRODUCT LINE	FISCAL MONTH

SYSTEM INSPECTED BY:	DATE	TIME IN	TIME OUT	DOWN TIME	TOTAL TIME
	1 2	1 2	1 2		

C.R. CHECKED BY:	DATE	DISPOSITION	CHECK TIME	DOWN TIME	TOTAL TIME

ACCEPTED BY:	Week & Date In	Week & Date Out	Run Time	Down Time	Total Time

CHECKOUT TECH.	Shipped By:	Ship Date	Ship Time	Total Accpt. Time

FAILURE REPORT — TOTAL # OF FAILURES

PROBLEMS:

ITEM FAILED	F	A	R	WAIVERS	DESCRIPTION
1. Modules					
2. Test Equipment					
3. System					
4. Misc.					
5.					
6.					
7.					
8.					
9.					

	SIZE	CODE	NUMBER	REV
	A	SP	11/Ø5-Ø-6	

TITLE ACCEPTANCE PROCEDURE FOR BASIC PDP11/05

ATTACHMENT #5

PDP11/05 ACCEPTANCE LOG (BASIC)

	Min Time	Date	Time In	Time Out	Pass	Fail	Time Up	Time Down
1. Initial Verification								
2. Mechanical Inspection								
3. Module Inspection								
4. Power and Ground Check								
5. Voltage Variation								
6. Quick Verify								
7. Burn-in Start Burn-in Recycle 1								
Burn-in Recycle 2 Burn-in Complete								
8. Console Test, Key & Lock Test								
9. Paper Tape Read								
10. Unibus Test								
11. Electrical Acceptance								
12. 50 Cycle Conversion								
13. Final Inspection								
14. Software Check for Completness								

SIZE	CODE	NUMBER	REV
A	SP	11/Ø5-Ø-6	

This drawing and specifications, herein, are the property of Digital Equipment Corporation and shall not be reproduced or copied or used in whole or in part as the basis for the manufacture or sale of items without written permission.

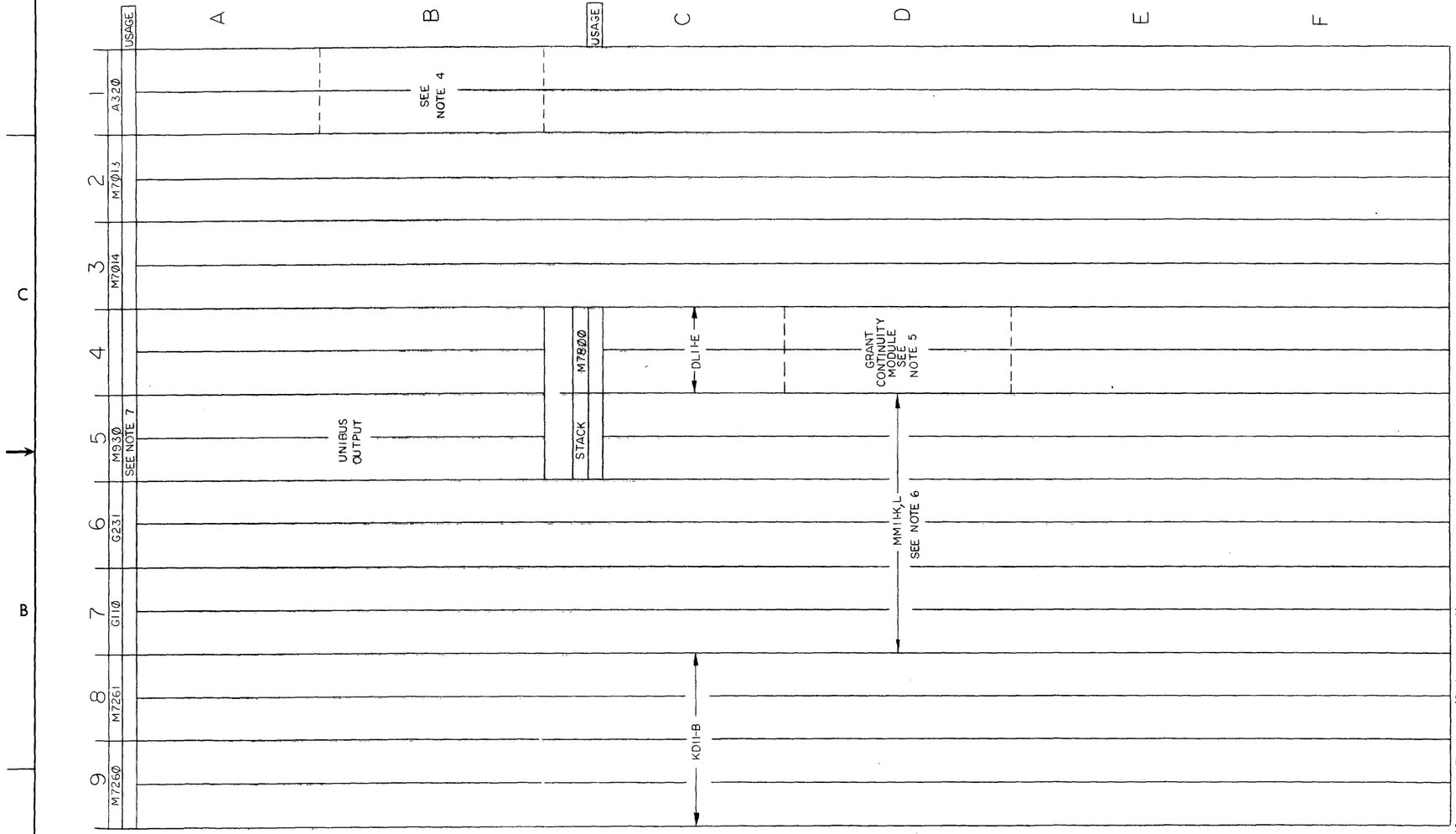

NOTES:

1. SUPPLIED WITH VT4Ø ASSEMBLY, SEE DWG. NO. A-PL-VT4Ø-Ø-Ø
2. SUPPLIED WITH PDP11Ø5. SEE DWG. NO. D-MU-11Ø5-Ø-Ø1 FOR FURTHER INFORMATION.
3. ASYNC LINE INTERFACE IS OFFERED AS OPTION WITH GT4Ø. SEE DWG. NO. A-PL-GT4Ø-Ø-Ø.
4. THIS SLOT IS WIRED FOR THE KM11 LIGHT BD. FOR DEBUGGING OF THE 11Ø5 CPU. REMOVE A32Ø MODULE TO USE THIS SLOT. REFER TO DWG. NO. A-SS-5509081-0-9 FOR PROPER LIGHT BOARD OVERLAY INFORMATION.
5. PREWIRED MODULE SLOT FOR SMALL PERIPHERAL OPTIONS. WITH NO OPTIONS INSTALLED, BUS GRANT CONTINUITY IS PROVIDED BY G727 MODULE IN LOCATION DØ4. THE G727 MODULE IS REMOVED WHEN A SMALL PERIPHERAL OPTION IS INSTALLED.
6. IF MM11-K, STACK IS H213. IF MM11-L, STACK IS H214.
7. BEFORE THE 11Ø5 IS CONNECTED TO OTHER SYSTEM OPTIONS, THE M93Ø BUS TERMINATOR IS MOVED TO THE END SYSTEM OPTION UPON INTERCONNECTION.

	QTY.	DESCRIPTION	PART NO.	ITEM NO.
SEE NOTE 2	REF	UNIBUS TERMINATOR	M93Ø	12
SEE NOTE 3	REF	ASYNC LINE INTERFACE	M78ØØ	11
SEE NOTE 2	REF	CPU DATA PATH	M7261	10
	REF	CPU CONTROL	M726Ø	9
SEE NOTE 1	REF	TERM., BUS CONT. & BOOTSTRAPS	M7Ø14	8
SEE NOTE 1	REF	DISPLAY CONT. AND CHAR. GEN.	M7Ø13	7
SEE NOTE 2	REF	MEMORY DRIVERS	G231	6
	REF	MEMORY CONTROL	G11Ø	5
	REF	8K MEMORY STACK	H214	4
	REF	4K MEMORY STACK	H213	3
	REF	GRANT CONTINUITY	G727	2
SEE NOTE 1	REF	VECTOR GEN. AND ANALOG	A32Ø	1

PARTS LIST

FIRST USED ON OPTION/MODEL: VT4Ø

UNLESS OTHERWISE SPECIFIED DIMENSION IN INCHES. TOLERANCES

DECIMALS	ANGLES
.XXX = .005	±0° 30'
.XX = .02	
.X = .1	

REMOVE BURRS AND BREAK SHARP CORNERS SURFACE QUALITY ✓

MATERIAL —//—

FINISH —//—

DRN. [signature] DATE 10-4-72
CHK'D. DATE
ENG. DATE
PROJ. ENG. DATE
PROD. [signature] DATE 10/24/72

NEXT HIGHER ASSY. B-DD-VT4Ø-Ø

SCALE —//—

SHEET 1 OF 1

digital EQUIPMENT CORPORATION MAYNARD MASSACHUSETTS

TITLE MODULE UTILIZATION

SIZE D CODE MU NUMBER VT4Ø-Ø-1 REV.

DIST.

REVISIONS: CHK | CHANGE NO. | REV

BRUNING 40-107 15968

DFC FORM NO DRD 100-A

digital EQUIPMENT CORPORATION
MAYNARD, MASSACHUSETTS

DRAWING DIRECTORY

CUSTOMER PRINT SET INDEX

THIS IS PRINT SET X

SEQUENCE		SEQUENCE
16 BIT PROCESSOR KD11-B	B-DD-KD11-B	
MICROPROGRAM FLOW	K-MP-KD11-B-1	
MICROPROGRAM SYMBOLIC LISTING	K-MP-KD11-B-2	
MICROPROGRAM BINARY LISTING	K-MP-KD11-B-3	
MICROPROGRAM CROSS REF. LISTING	K-MP-KD11-B-4	
DATA PATHS	E-CS-M726Ø-Ø-1	
DATA PATH ROM PATTERNS	K-RL-M726Ø-Ø-8	
CONTROL LOGIC & MICROPROGRAMS	E-CS-M7261-Ø-1	
CONTROL LOGIC ROM PATTERNS	K-RL-M7261-Ø-8	

UNIT VARIATIONS

VARIATION	TITLE	PRINT SET TYPE: KD11-B
KD11-B	16 BIT PROCESSOR	

REVISIONS

DATE	CHG. NO.	REV
[illegible]	KD11E-00002	B
M.T.	KD11E-00003	C
M.T.	KD11B-4	

USED ON OPTION/MODEL

DRN. J.CAHILL	DATE 4/21/72	TITLE 16 BIT PROCESSOR KD11-B
CHK'D. C.Teschner	DATE 5-15-72	
PROJ ENG A. Tacher	DATE 5-16-72	
PROD. [illegible]	DATE 5/16/72	SIZE B · CODE DD · NUMBER KD11-B · REV C
FIELD SERV. D. Vickrout	DATE	
SHEET 1 OF		DIST

DEC 16-(32[illegible]-1062 [illegible]

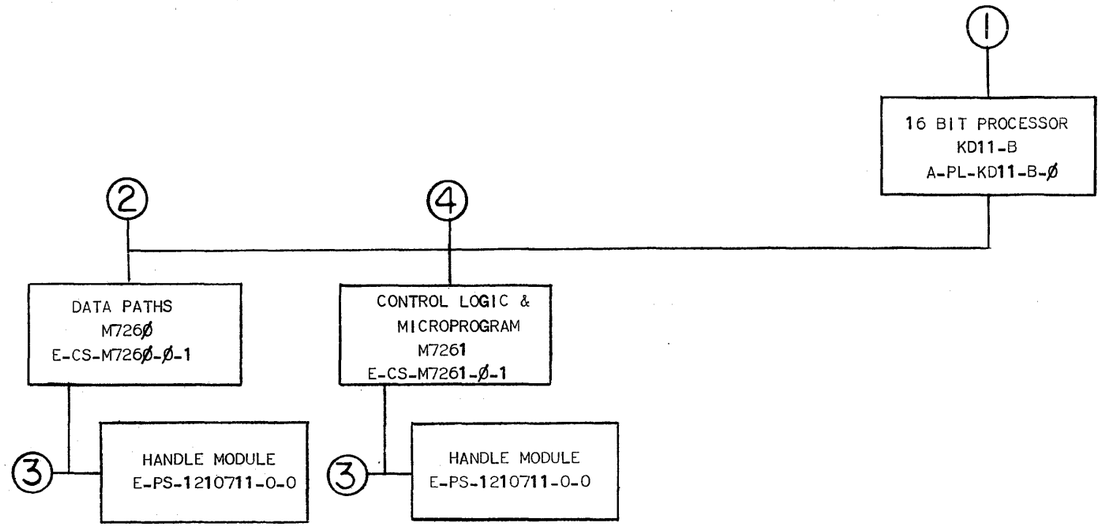

TITLE		SIZE	CODE	NUMBER	REV
16 BIT PROCESSOR KD11-B	SHEET 2 OF 3	B	DD	KD11-B	C

ELECTRICAL

CUSTOMER PRINT SET KD11-B	MFG. SET	FIND NO.	DRAWING NO.	REV	NO OF SHT	DESCRIPTION	OPTION NO.
		1.	A-PL-KD11-B-Ø		1	16 BIT PROCESSOR (KD11-B)	
C			K-MP-KD11-B-1	B	22	MICOPROGRAM FLOW	
C			K-MP-KD11-B-2	C	6	MICROPROGRAM SYMBOLIC LISTING	
C			K-MP-KD11-B-3	C	7	MICROPROGRAM BINARY LISTING	
C			K-MP-KD11-B-4		3	MICROGROGRAM CROSS REF. LISTING	
X		2.	E-CS-M726Ø-Ø-1	#	10	DATA PATHS (M726Ø)	
			B-MH-M726Ø-Ø-6		1	MODULE ECO HISTORY	
			K-CO-M726Ø-Ø-4		1	X-Y CO-ORDINATE HOLE LOCATION	
			B-AH-M726Ø-Ø-5		1	ASSY/DRILLING HOLE	
X			K-RL-M726Ø-Ø-8	#	15	DATA PATH ROM PATTERNS	
X		4.	E-CS-M7261-Ø-1	#	13	CONTROL LOGIC & MICROPROGRAM	
			B-MH-M7261-Ø-6		1	MODULE ECO HISTORY	
			K-CO-M7261-Ø-4		1	X-Y CO-ORDINATE HOLE LOCATION	
			B-AH-M7261-Ø-5		1	ASSY/DRILLING HOLE	
X			K-RL-M7261-Ø-8	#	57	CONTROL LOGIC ROM PATTERNS	

MECHANICAL

CUSTOMER PRINT SET KD11-B	MFG SET	FIND NO.	DRAWING NO.	REV	NO OF SHT	DESCRIPTION	OPTION NO.
		1.	A-PL-KD11-B-Ø		1	16 BIT PROCESSOR (KD11-B)	
		2.	E-CS-M726Ø-Ø-1		10	DATA PATHS (M726Ø)	
			B-MH-M726Ø-Ø-6		1	MODULE ECO HISTORY	
			K-CO-M726Ø-Ø-4		1	X-Y CO-ORDINATE HOLE HISTORY	
			B-AH-M726Ø-Ø-5		1	ASSY/DRILLING HOLE	
		3.	E-PS-1210711-0-0		1	HANDLE MODULE	
		4.	E-CS-M7261-Ø-1		13	CONTROL LOGIC & MICROPROGRAM	
			B-MH-M7261-Ø-6		1	MODULE ECO HISTORY	
			K-CO-M7261-Ø-4		1	X-Y CO-ORDINATE HOLE LOCATION	
			B-AH-M7261-Ø-5		1	ASSY/DRILLING HOLE	

TITLE		SIZE	CODE	NUMBER	REV
16 BIT PROCESSOR KD11-B	SHEET 3 OF 3	B	DD	KD11-B	C

PAGE REVISION CONTROL SHEET

SH NO.	PAGE REVISIONS	REMARKS
1	A B	
2	A A	
3	A A	
4	A A	
5	A A	
6	A A	
7	A B	
8	A A	
9	A A	
10	A A	
11	A A	
12	A A	
13	A A	
14	A A	
15	A A	
16	A A	
17	A A	
18	A A	
19	A A	
20	A A	
21	A A	
22	A A	

ECO NO.	KD112-2	KD112-3
ETCH REV.		
ENG.	BA	MT
DATE	8-28-72	9-21-72

FIRST USED ON OPTION/MODEL

KDII-B

DRN. G. TOWNE	DATE 8-21-72	
CHK'D. J McCullough	DATE 8-21-72	
ENG. Bob Armstrong	DATE 8-29-72	
PROJ. ENG. Bob Armstrong	DATE 8-29-72	
PROD.	DATE	

digital EQUIPMENT CORPORATION
MAYNARD, MASSACHUSETTS

TITLE

MICROPROGRAM FLOW

"THIS DRAWING AND SPECIFICATIONS, HEREIN, ARE THE PROPERTY OF DIGITAL EQUIPMENT CORPORATION AND SHALL NOT BE REPRODUCED OR COPIED OR USED IN WHOLE OR IN PART AS THE BASIS FOR THE MANUFACTURE OR SALE OF ITEMS WITHOUT WRITTEN PERMISSION.
COPYRIGHT © 1972 DIGITAL EQUIPMENT CORPORATION"

NEXT HIGHER ASSY.

B-DD-KDII-B

SCALE —

SHEET 1 OF 22

SIZE	CODE	NUMBER	REV.
K	MP	KDII-B-1	B

DIST.

NOTES ON NOTATION:

1, MICROROUTINES BEGIN WITH A COMMENT
THE FIRST CHARACTER OF WHICH IS '*',

2, ALL OTHER COMMENTS BEGIN WITH '/',

3, R[N] REFERRS SCRATCH PAD REGISTER N,
R[7] IS ALSO REFERRED TO AS 'PC',

4, R[S] REFERRS TO THAT REGISTER SPECIFIED
IN THE SOURCE PORTION OF THE CURRENT INST,
(IR<11:9>), LIKEWISE, R[D] REFERRS TO THAT
REG SPECIFIED IN THE DESTINATION PORTION OF
THE CURRENT INST, (IR<2:0>),

5, K[N] REFERRS TO THAT LOCATION OF THE
CONSTANTS CHIP CONTAINING THE CONSTANT N,

6, 'BUT' STANDS FOR 'BRANCH ON MICRO TEST',

```
LOC  NXT  * INSTRUCTION FETCH
062  053  F=1   BA=PC; DATI
053  365  F=2   B=PC+2
365  364  F=3   PC=B; CKOFF
364  061  F=4   B,IR=UNIBUS DATA
061  001  F=5   B=B SEX; BUT IR DECODE
          / IF DOUBLE OP INST GOTO S0=1 THRU S7=1 DEPENDING ON SOURCE MODE
          / IF SINGLE OP INST GOTO D0=1 THRU D7=1 DEPENDING ON DEST MODE (INCLUDING JSR)
          / IF BRANCH, CHANGE PC GOTO B=1
          / IF BRANCH, PC UNCHANGED GOTO B2=2
          / IF CLEAR OR SET COND CODE(S) GOTO CCM=1
          / IF INST=RTS GOTO R1=1
          / IF INST=RTI GOTO R2=1
          / IF INST=WAIT GOTO W=1
          / IF INST=HALT GOTO H=1
          / IF INST=RESET GOTO RST=1
          / IF INST=EMT GOTO ET=1
          / IF INST=BREAKPOINT TRAP GOTO BT=1
          / IF INST=IOT GOTO IT=1
          / IF INST=TRAP GOTO T=1
          / IF RESERVED INST (NONE OF THE ABOVE) GOTO RT=1
```



```
LOC  NXT  * SOURCE MODE 0 (REGISTER), GET SOURCE DATA
          / GET TO S0=1 FROM F=5 VIA BUT IR DECODE IR<11:9>=0
201  007  S0=1  B=R[S]; BUT BYTE
          / IF BYTE INST GOTO SBE=1 (MUST BE EVEN BYTE)
007  001  S0=2  R[D]=B; BUT DESTINATION
          / IF IR<5:3>  =0 GOTO D0=1
          /             =1      D1=1
          /             =2      D2=1
          /             =3      D3=1
          /             =4      D4=1
          /             =5      D5=1
          /             =6      D6=1
          /             =7      D7=1
```

```
LOC  NXT  * SOURCE MODE 1 (REG, DEFERRED) GET SOURCE DATA
          / GET TO S1=1 FROM F=5 VIA BUT IR DECODE IR<11:9>
203  244  S1=1  BA=R[S]; DATI; CKOFF; ALBYT
          / GET TO S1=2 FROM S2=3 VIA GOTO
          /          "       S3=5    "
          /          "       S6=5    "
244  007  S1=2  B=UNIBUS DATA; BUT BYTE; GOTO S0=2
          / IF ODD BYTE GOTO SBO=1
          / IF EVEN BYTE GOTO SBE=1
          / IF NOT BYTE FALL THROUGH TO S0=2
```

```
LOC  NXT  * SOURCE MODE 2 (AUTO=INC,) GET SOURCE DATA
          / GET TO S2=1 FROM F=5 VIA BUT IR DECODE IR<11:9>=2
205  301  S2=1  BA=R[S]; DATI; ALBYT
301  014  S2=2  B=R[S]+1+BYTE,BAR
          / GET TO S2=3 FROM S4=1 VIA GOTO
014  244  S2=3  R[S]=B; CKOFF; GOTO S1=2
```

```
LOC  NXT  *SOURCE MODE 3 (AUTO=INC DEFERRED) GET SOURCE DATA
          / GET TO S3=1 FROM F=5 VIA BUT IR DECODE IR<11:9>=3
207  016  S3=1  BA=R[S]; DATI (MUST BE AN EVEN ADDRESS HERE)
016  017  S3=2  B=R[S]+2
```

```
          / GET TO S3=3 FROM S5=1 VIA GOTO
017  134  S3=3  R[S]=B; CKOFF
          / GET TO S3=4 FROM S7=5 VIA GOTO
134  274  S3=4  B=UNIBUS DATA
274  244  S3=5  BA=B; DATI; CKOFF; GOTO S1=2; ALBYT



LOC  NXT  * SOURCE MODE 4 (AUTO=DEC) GET SOURCE DATA
          / GET TO S4=1 FROM F=5 VIA BUT IR DECODE IR<11:9>=4
211  014  S4=1  B,BA=R[S]=1=BYTE,BAR; DATI; ENABOVER; GOTO S2=3; ALBYT



LOC  NXT  * SOURCE MODE 5 (AUTO=DEC DEFERRED) GET SOURCE DATA
          / GET TO S5=1 FROM F=5 VIA BUT IR DECODE IR<11:9>=5
213  017  S5=1  B,BA=R[S]=2; DATI(MUST BE AN EVEN ADDRESS HERE); ENABOVER; GOTO S3=3



LOC  NXT  * SOURCE MODE 6 (INDEXED) GET SOURCE DATA
          / GET TO S6=1 FROM F=5 VIA BUT IR DECODE IR<11:9>=6
215  025  S6=1  BA=PC; DATI(MUST BE EVEN ADDRESS HERE)
025  026  S6=2  B=PC+2
026  027  S6=3  PC=B; CKOFF
027  030  S6=4  B=UNIBUS DATA
030  244  S6=5  BA=B+R[S]; DATI; CKOFF; GOTO S1=2; ALBYT



LOC  NXT  * SOURCE MODE 7 (INDEXED DEFERRED) GET SOURCE DATA
          / GET TO S7=1 FROM F=5 VIA BUT IR DECODE IR<11:9>=7
217  032  S7=1  BA=PC; DATI(MUST BE AN  EVEN ADDRESS HERE)
032  033  S7=2  B=PC+2
033  034  S7=3  PC=B; CKOFF
034  035  S7=4  B=UNIBUS DATA
035  134  S7=5  BA=B+R[S]; DATI(MUST BE AN EVEN ADDRES) ; CKOFF; GOTO S3=4
```



```
LOC  NXT  * SOURCE BYTE ODD
          / GETE TO SBO=1 FROM S1=2 VIA BUT BYTE (BYTE INST, AND SOURCE DATA ODD ADDR)
067  346  SBO=1 SHIFT B RIGHT; F SHIFT
346  324  SBO=2 SHIFT B RIGHT; F SHIFT
324  340  SBO=3 SHIFT B RIGHT; F SHIFT
340  361  SBO=4 SHIFT B RIGHT; F SHIFT
361  050  SBO=5 SHIFT B RIGHT; F SHIFT
050  020  SBO=6 SHFIT B RIGHT; F SHIFT
020  052  SBO=7 SHIFT B RIGHT; F SHIFT
052  047  SBO=8 SHIFT B RIGHT; GOTO SBE=1
```

```
LOC  NXT  * SOURCE EVEN BYTE
          / GET TO SBE=1 FROM SBO=8 VIA GOTO
          / GET TO SBE=1 FROM S1=2 VIA BUT BYTE, (BYTE INST AND SOURCE DATA EVEN ADDR)
          / GET TO SBE=1 FROM S0=1 VIA BUT BYTE, (BYTE INST,)
047  001  SBE=1 R[10]=B SEX; BUT DESTINATION
          / IF IF<5:3>  =0 GOTO D0=1
          /    "                =1  "   D1=1
          /    "                =2  "   D2=1
          /    "                =3  "   D3=1
          /    "                =4  "   D4=1
          /    "                =5  "   D5=1
          /    "                =6  "   D6=1
          /    "                =7  "   D7=1



LOC  NXT  * DEST, MODE 0 (REGISTER), GET DEST DATA, OP, AND REPLACE
          / GET TO D0=1 FROM S0=2 VIA BUT DESTINATION (IR<5:3>=0)
          / GET TO D0=1 FROM SBE=1 VIA BUT DESTINATION (IR<5:3>=0)
101  154  D0=1  B=R[D]; BUT MOVE
          / IF INST=MOVE,BAR (OTHER THAN MOVE) AND BYTE GOTO DB0=1
          / IF INST=MOVE AND BYTE GOTO MB=0
          / IF INST=MOVE AND BYTE,BAR GOTO D0=3A
          / IF INST=MOVE,BAR AND BYTE,BAR FALL THROUGH TO D0=2
157  142  D0=2  R[11]=B; BUT UNARY
          / IF INST=JMP OR JSR GOTO ERT=1 (ILLEGAL INST, TRAP)
          / IF INST=SWAB GOTO SB1=1
          / IF INST=OTHER UNARY(CLR,COM,INC,DEC,NEG,ADC,SBC,TST,ROR,ROL,ASR,ASL) GOTO U1=1
          / GET TO D0=3 FROM U1=1 VIA GOTO
          / GET TO D0=3 FROM D0=1 VIA BUT BYTE (INST=MOVE AND BYTE',BAR)
```

```
162  332  D0=3  B=R[10] OP B; BUT NONMOD
          / SEE DESCRIPTION OF AUXILLARY ALU CONTROL (AUX CONTROL)
          / FOR MORE DETAILS ON WHAT 'OP' ACCOMPLISHES
          / THERE EXISTS A D03=A WHICH IS IDENTICAL TO D0=3 EXCEPT LOC=155
          / GET TO D0=3A FROM SB1=8 VIA GOTO
          / IF NONMOD GOTO B2=2 (BUT SERVICE)
          / IF NOT NONMOD FALL THROUGH TO D0=4
          / GET TO D0=4 FROM R1=6 VIA GOTO
332  040  D0=4  R[D]=B; BUT SERVICE
          / PRIORITIES ARE LISTED HIGHEST TO LOWEST
          / IF T BIT TRAP GOTO BT=1
          / IF STACK OVERFLOW GOTO ERTIA
          / IF POWERFAIL GOTO PF=1
          / IF BR7 GOTO BG=1
          / IF BR6 GOTO BG=1
          / IF INTERNAL LINE CLOCK GOTO LC=1
          / IF BR5 GOTO BG=1
          / IF BR4 GOTO BG=1
          / IF UATR RECEIVE GOTO URTR
          / IF UART TRANSMIT GOTO URTX
          / IF CONSOLE STOP GOTO H=1
          / IF NONE OF THE ABOVE GOTO F=1



LOC  NXT  * DEST, MODE 1 (REG,DEFERRED) GET DEST DATA, OP, AND REPLACE
          / GET TO D1=1 FROM S0=2 VIA BUT DESTINATION (IR<5:3>=1)
          / GET TO D1=1 FROM SBE=1 VIA BUT DESTINATION (IR<5:3>=1)
103  200  D1=1  B,BA=R[D]; DATIP; BUT JSRMP; ALBT; CKOFF
          / NOTE DATA IN PAUSE HERE
          / IF INST=JMP GOTO J1=1
          / IF INST=JSR GOTO J2=1
          / IF INST NOT JMP OR JSR FALL THROUGH TO D1=2
          / GET DO D1=2 FROM D2=3 VIA GOTO
          / GET TO D1=2 FROM D3=5 VIA GOTO
          / GET TO D1=2 FROM D6=5 VIA GOTO
200  210  D1=2  B=UNIBUS DATA; BUT BYTE
          / IF ODD BYTE GOTO D0=1
          / IF EVEN BYTE GO TO DE=1
          / IF NOT BYTE FALL THROUGH TO D1=3
210  143  D1=3  R[11]=B; BUT UNARY
          / IF INST=SWAB GOTO SB2=1
          / IF INST=OTHER UNARY (CLR, COM,INC,DEC,NEG,ADC, SBC,TST,ROR,ROL,ASR,ASL) GOTO U2=1
          / GET TO D1=4 FROM DE=1 VIA BUT UNARY (NON UNARY)
          / GET TO D1=4 FROM U2=1 VIA GOTO
          / GET TO D1=4 FROM SB2=8 VIA GOTO
163  334  D1=4  B=R[10] OP B; BUT NONMOD
          / SEE DESCRIPTION OF AUXILLARY ALU CONTROL (AUX CONROL)
          / FOR MORE DETAILS ON WHAT 'OP' ACCOMPLISHES
```



```
          / IF NONMOD GOTO B2-2 (BUT SERVICE)
          / IF NOT NONMOD FALL THROUGH TO D1-5
334  065  D1-5  DATO; ALBYT; CKOFF
          / GET TO D1-6 FROM DD-18 VIA GOTO
065  305  D1-6  DRIVERS=B; GOTO B2-2 (BUT SERVICE)
```

```
LOC  NXT  * DEST MODE 2 (AUTO-INC) GET DEST DATA, OP AND REPLACE
          / GET TO D2-1 FROM S0-2 VIA BUT DESTINATION (IR<5:3>=2)
          / GET TO D2-1 FROM SBE-1 VIA BUT DESTINATION (IR<5:3>=2)
105  331  D2-1  BA=R[D]; DATIP; ALBYT
          / NOTE DATA IN PAUSE HERE
331  341  D2-2  B=R[D]+1+BYTE,BAR
          / GET TO D2-3 FROM D4-1 VIA GOTO
341  200  D2-3  R[D]=B; BUT JSRMP; GOTO D1-2; CKOFF
          / IF INST=JMP GOTO J1-1
          / IF INST=JSR GOTO J2-1
          / IF INST NOT JMP OR JSR FALL THROUGH TO D1=2



LOC  NXT  * DEST MODE 3 (AUTO-INC DEFERRED) GET DEST DATA, OP AND REPLACE
          / GET TO D3-1 FROM S0-2 VIA BUT DESDTINATION (IR<5:3>=3)
          / GET TO D3-1 FROM SBE-1 VIA BUT DESTINATION (IR<5:3>=3)
107  160  D3-1  BA=R[D]; DATI
160  070  D3-2  B=R[D]+2
          / GET TO D3-3 FROM D5-1 VIA GOTO
070  071  D3-3  R[D]=B; CKOFF
          / GET TO D3-4 FROM D7-5 VIA GOTO
071  072  D3-4  B=UNIBUS DATA
072  200  D3-5  BA=B; DATIP; BUT JSRMP; GOTO D1-2; ALBYT; CKOFF
          / NOTE DATA IN PAUSE HERE
          / IF INST=JMP GOTO J1-1
          / IF INST=JSR GOTO J2-1
          / IF INST NOT JMP OR JSR FALL THROUGH TO D1=2



LOC  NXT  * DEST MODE 4(AUTO-DEC) GET DEST DATA, OP AND REPLACE
          / GET TO S4-1 FROM S0-2 VIA BUT DESTINATRON (IR<5:3>=4)
          / GET TO S4-1 FROM SBE-1 VIA BUT DESTINATION (IR<5:3>=4)
111  341  D4-1  B,BA=R[D]-1-BYTE,BAR; DATIP; ENABOVER; GOTO D2=3; ALBYT
```

```
LOC  NXT  * DEST MODE 5 (AUTO-DEC DEFERRED) GET DEST DATA, OP, AND REPLACE
          / GET TO D5-1 FROM S0-2 VIA BUT DESTINATION (IR<5:3>=5)
          / GET TO D5-1 FROM SBE-1 VIA BUT DESTINATION (IR<5:3>=5)
113  070  D5-1  B,BA-R[D]-2, DATI, ENABOVER, GOTO D3-3
```

```
LOC  NXT  * DEST MODE 6 (INDEXED) GET DTA,OP, AND REPLACE
          / GET TO D6-1 FROM S0-2 VIA BUT DESTINATION (IR<5:3>=6)
          / GET TO D6-1 FROM SBE-1 VIA BUT DESTINAITON (IR<5:2>=6)
115  075  D6-1  BA-PC, DATI
075  077  D6-2  B-PC-2
077  057  D6-3  PC-B, CKOFF
057  300  D6-4  B-UNIBUS DATA
300  200  D6-5  B,BA-B+R[D], DATIP, BUT JSRMP, GOTO D1-2, ALBYT, CKOFF
          / NOTE DATA IN PHASE HERE
          / IF INST=JMP GOTO J1-1
          / IF INST=JSR GOTO J2-1
          / IF INST NOT JMP OR JSR FALL THROUGH TO D1-2
```

```
LOC  NXT  * DEST MODE 7 (INDEXED DEFERRED) GET DEST DATA,OP, AND REPLACE
          / GET TO D7-1 FROM S0-2 VIA BUT DESTINATION (IR<5:3>=7)
          / GET TO D7-1 FROM SBE-1 VIA BUT DESTINATION (IR<5:3>=7)
117  310  D7-1  BA-PC, DATI
310  104  D7-2  B-PC-2
104  320  D7-3  PC-B, CKOFF
320  106  D7-4  B-UNIBUS DATA
106  071  D7-5  BA-B+R[D], DATI, CKOFF, GOTO D3-4
```

```
LOC  NXT  * DESTINATION MODE 0, BYTE
          / GET TO DB0-1 FROM B0-1 VIA BUT BYTE (BYTE INST AND MOVE,BAR)
156  144  DB0-1 R[11],B-B SEX, BUT UNARY
          / IF UNARY OTHER THAN JSR, JMP, OR SWAB (CLR,COM,INC,DEC,NEG,ADC,SBC,TST,ROR,ROL,ASR,ASL) GOTO U3-1
```



```
          / IF NOT UNARY FALL THROUGH TO DB0-2
164  304  DB0-2 B-R[10] OP B, BUT NONMOD
          / SEE DESCRIPTION OF AUXILLARY ALU CONROL (AUX CONTROL)
          / FOR MORE DETAILS ON WHAT 'OP' ACCOMPLISHES
          / IF NONMOD GOTO B2-2 (SERVICE)
          / IF NOT NONMOD FALL THRU TO DB0-3
304  040  DB0-3 R[D]<7:0>-B, BUT SERVICE, GOTO F-1
          / PRIORITIES ARE LISTED HIGHEST TO LOWEST
          / IF T BIT TRAP GOTO BT-1
          / IF STACK OVERFLOW GOTO ERTSA
          / IF POWER FAIL GOTO PF-1
          / IF BR7 GOTO BG-1
          / IF BR6 GOTO BG-1
          / IF INTERNAL LINE CLOCK GOTO LC-1
          / IF BR5 GOTO BG-1
          / IF BR4 GOTO BG-1
          / IF UART RECEIVE GOTO URTR
          / IF UART TRANSMIT GOTO URTX
          / IF CONSOLE STOP GOTO H-1
          / IF NONE OF THE ABOVE GOTO F-1
```

```
LOC  NXT  * DESTINATION ODD BYTE
          / GET TO DO-1 FROM DI-2 VIA BUT BYTE (BYTE INST AND ODD ADDR)
270  123  DO-1  SHIFT B RIGHT, F SHIFT
123  124  DO-2  SHIFT B RIGHT, F SHIFT
124  125  DO-3  SHIFT B RIGHT, F SHIFT
125  126  DO-4  SHIFT B RIGHT, F SHIFT
126  127  DO-5  SHIFT B RIGHT, F SHIFT
127  130  DO-6  SHIFT B RIGHT, F SHIFT
130  131  DO-7  SHIFT B RIGHT, F SHIFT
131  132  DO-8  SHIFT B RIGHT
132  145  DO-9  R[11],B-B SEX, BUT UNARY
          / IF UNARY OTHER THAN JSR, JMP, OR SWAB (CLR,COM,INC,DEC,NEG,ADC,SBC,TST,ROR,ROL,ASR,ASL) GOTO U4-1
          / IF NOT UNARY FALL THROUGH TO DO-10
165  342  DO-10 B-R[10] OP B, BUT NONMOD
          / SEE DESCRIPTION OF AUXILLARY ALU CONTROL (AUX CONROL)
          / FOR MORE DETAILS ON WHAT 'OP' ACCOMPLISHES
          / IF NONMOD GOTO B2-2 (BUT SERVICE)
          / IF NOT NONMOD FALL THROUGH TO DO-11
342  135  DO-11 SHIFT B LEFT, F SHIFT
135  136  DO-12 SHIFT B LEFT, F SHIFT
136  137  DO-13 SHIFT B LEFT, F SHIFT
137  140  DO-14 SHIFT B LEFT, F SHIFT
140  141  DO-15 SHIFT B LEFT, F SHIFT
141  142  DO-16 SHIFT B LEFT, F SHIFT
142  143  DO-17 SHIFT B LEFT, F SHIFT
143  065  DO-18 SHIFT B LEFT, DATO, CKOFF, GOTO D1-6, ALBYT
```

```
LOC  NXT  * DESTINATION EVEN BYTE
          / GET TO DE=1 FROM D1=2 VIA BUT BYTE (BYTE INST AND EVEN ADDR)
250  163  DE=1  R[11]=B SEX; GOTO D1=4; BUT UNARY
          / IF UNARY OTHER THAN JSR,JMP, OR SWAB (CLR,COM,INC,DEC,ADC,SBC,TST,ROR,ASR,ASL) GOTO U5=1
          / IF NOT UNARY FALL THROUGH TO D1=4



LOC  NXT  * UNARY OPERATORS GET SINGLE OPERAND IN B AND R[10]
          / CKOFF IN EACH OF THE FOLLOWING (U1=1, U2=1, U3=1, U4=1, AND U5=1)
          / GIVES THE AUX CONTROL SUFFICIENT TIME TO DO ITS THING,
          / THAT IS,, REMAIN IN CURRENT STATE (MICRO STEP) FOR TWO
          / PROCESSOR CKOCK PERIODS SO THAT THE CONDITION CODE LOGIC
          / HAS SUFFICIENT TIME TO SETTLE,
          / GET TO U1=1 FROM D0=2 VIA BUT UNARY (INST=CLR,COM,INC,DEC,NEG,ADC,SBC,TST,ROR,ROL,ASR,ASL)
352  162  U1=1  R[10]=B; CKOFF; GOTO D0=3
          / GET TO U2=1 FROM D1=3 VIA BUT UNARY (INST=CLR,COM,,,,ASL) SEE U1=1
353  163  U2=1  R[10]=B; CKOFF; GOTO D1=4
          / GET TO U3=1 FROM DB0=1 VIA BUT UNARY (INST=CLR,COM,,,,ASL) SEE U1=1
354  164  U3=1  R[10]=B; CKOFF; GOTO DB0=2
          / GET TO U4=1 FROM D0=9 VIA BUT UNARY (INST=CLR,COM,,,,ASL) SEE U1=1
355  165  U4=1  R[10]=B; CKOFF; GOTO D0=10
          / GET TO U5=1 FROM DE=1 VIA BUT UNARY (INST=CLR,COM,,,,ASL) SEE U1=1
373  163  U5=1  R[10]=B; CKOFF; GOTO D1=4



LOC  NXT  * MOVB INST
          / GET TO MB=0 FROM D0=1 VIA BUT MOVE (INST=MOVE AND BYTE)
154  240  MB=0  CKOFF
          / CKOFF IN MB=0 GIVES THE AUX CONTROL SUFFICIENT TIME TO DO ITS THING,
          / THAT IS,, REMAIN IN CURRENT STATE (MICRO STEP) FOR TWO
          / PROCESSOR CLOCK PERIODS SO THAT THE CONDITION CODE LOGIC
          / HAS SUFFICIENT TIME TO SETTLE,
240  152  MB=1  B=R[10]
152  040  MB=2  R[0]=B SEX; BUT SERVICE
          / PRIORITIES ARE LISTED HIGHEST TO LOWEST
          / IF T BIT TRAP GOTO BT=1
          / IF STACK OVERFLOW GOTO ERT1A
          / IF POWER FAIL GOTO PF=1
```



```
          / IF BR7 GOTO BG=1
          / IF BR6 GOTO BG=1
          / IF INTERNAL LINE CLOCK GOTO LC=1
          / IF BR5 GOTO BG=1
          / IF BG4 GOTO BG=1
          / IF UART RECEIVE GOTO URTR
          / IF UART TRANSMIT GOTO URTX
          / IF CONSOLE STOP GOTO H=1
          / IF NONE OF THE ABOVE GOTO F=1



LOC  NXT  * BRANCH, CHANGE PC
015  147  B=1   SHIFT B LEFT
147  146  B=2   B=PC=B
146  040  B=3   PC=B; BUT SERVICE
          / PRIORITIES ARE LISTED HIGHEST TO LOWEST
          / IF T BIT TRAP GOTO BT=1
          / IF STACK OVERFLOW GOTO ERT1A
          / IF POWER FAIL GOTO  PF=1
          / IF BR7 GOTO BG=1
          / IF BR6  GOTO BG=1
          / IF INTERNAL LINE CLOCK GOT LC=1
          / IF BR5 GOTO BG=1
          / IF BR4 GOTO BG=1
          / IF UART RECEIVE GOTO URTR
          / IF UART TRANSMIT GOTO URTX
          / IF CONSOLE STOP GOTO H=1
          / IF NONE OF THE ABOVE GOTO F=1



LOC  NXT  * CONDITION CODE MASK (FOR BOTH SET AND CLEAR)
151  350  CCM=1 B=B AND K[17]
350  112  CCM=2 BUT DEST
          / IF INST= SET, GO TO SC=1
          / IF INST= CLEAR, GOTO CC=1



LOC  NXT  * CLEAR CONDITION CODES
112  040  CC=1  PSW=PSW AND (B',BAR); BUT SERVICE
          / THIS EFFECTIVELY CLEARS THOSE BITS OF THE PSW WHICH ARE SET
```

```
        / IN THE B REG; B,BAR IS B REGISTER COMPLEMENTED;
        / PRIORITIES ARE LISTED HIGHEST TO LOWEST
        / IF T BIT BRAP GOTO BT=1
        / IF STACK OVERFLOW GOTO ERT1A
        / IF POWER FAIL GOTO PF=1
        / IF BR7 GOTO BG=1
        / IF BR6 GOTO BG=1
        / IF INTERNAL LINE CLOCK GOTO LC=1
        / IF BR5 GOTO BG=1
        / IF BR4 GOTO BG=1
        / IF UART RECEIVE GOTO URTR
        / IF UART TRNASMIT GOTO URTX
        / IF CONSOLE STOP GOTO H=1
        / IF NONE OF THE ABOVE GOTO F=1



LOC  NXT  * SET CONDITION CODES
116  040  SC=1  PSW=PSW OR B; BUT SERVICE
        / PRIORITIES ARE LISTED HIGHEST TO LOWEST
        / IF T BIT TRAP GOTO BT=1
        / IF STACK OVERFLOW GOTO ERT1A
        / IF POWER FAIL GOTO PF=1
        / IF BR7 GOTO BG=1
        / IF BR6 GOTO BG=1
        / IF INTERNAL LINE CLOCK GOTO LC=1
        / IF BR5 GOTO BG=1
        / IF BR4 GOTO BG=1
        / IF UART RECEIVE GOTO URTR
        / IF UART TRANSMIT GOTO URTX
        / IF CONSOLE STOP GOTO H=1
        / IF NONE OF THE ABOVE GOTO F=1

LOC  NXT  * SWAB, MODE 0
        / GET TO SB1=1 FROM D0=2 VIA BUT UNARY (INST=SWAB AND MODE=0)
        / ROTATE LEFT ACCOMPLISHED VIA ASR
166  172  SB1=1 ROTATE B LEFT; F SHIFT
172  173  SB1=2 ROTATE B LEFT; F SHIFT
173  174  SB1=3 ROTATE B LEFT; F SHIFT
174  144  SB1=4 ROTATE B LEFT; F SHIFT
144  176  SB1=5 ROTATE B LEFT; F SHIFT
176  177  SB1=6 ROTATE B LEFT; F SHIFT
177  006  SB1=7 ROTATE B LEFT; F SHIFT
006  155  SB1=8 ROTATE B LEFT; GOTO D0=3A
```



```
LOC  NXT  * SWAB, NOT MODE 0
        / GET TO SB2=1 FROM D1=3 VIA BUT UNARY (INST=SWAB)
        / ROTATE LEFT ACCOMPLISHED VIA ASR
167  012  SB2=1 ROTATE B LEFT; F SHIFT
012  220  SB2=2 ROTATE B LEFT; F SHIFT
220  022  SB2=3 ROTATE B LEFT; F SHIFT
022  023  SB2=4 ROTATE B LEFT; F SHIFT
023  024  SB2=5 ROTATE B LEFT; F SHIFT
024  031  SB2=6 ROTATE B LEFT; F SHIFT
031  330  SB2=7 ROTATE B LEFT; F SHIFT
330  163  SB2=8 ROTATE B LEFT; GOTO D1=4



LOC  NXT  * JMP
        / GET TO J1=1 FROM D1=1 VIA BUT JSRMP (INST=JMP)
        / GET TO J1=1 FROM D2=3 VIA BUT JSRMP (INST=JMP)
        / GET TO J1=1 FROM D3=5 VIA BUT JSRMP (INST=JMP)
        / GET TO J1=1 FROM D6=5 VIA BUT JSRMP (INST=JMP)
204  260  J1=1  NOP
        / J1=1 MUST BE A NOP BECAUSE FOLLOWING A CKOFF, THE AMX WILL
        / BE FORCED TO TAKE DATA FROM THE UNIBUS;
260  040  J1=2  PC=B; BUT SERVICE
        / PRIORITIES ARE LISTED HIGHEST TO LOWEST
        / IF T BIT TRAP GOTO BT=1
        / IF STACK OVERFLOW GOTO ERT1A
        / IF POWER FAIL GOTO PF=1
        / IF BR7 GOTO BG=1
        / IF BR6 GOTO BG=1
        / IF INTERNAL LINE CLOCK GOTO LC=1
        / IF BR5 GOTO BG=1
        / IF BR4 GOTO BG=1
        / IF UART RECEIVE GOTO URTR
        / IF UART TRANSMIT GOTO URTX
        / IF CONSOLE STOP GOTO H=1
        / IF NONE OF THE ABOVE GOTO F=1
```

```
LOC  NXT  * JSR
          / GET TO J2=1 FROM D1=1 VIA BUT JSRMP (INST=JSR)
          / GET TO J2=1 FROM D2=3 VIA BUT JSRMP (INST=JSR)
          / GET TO J2=1 FROM D3=5 VIA BUT JSRMP (INST=JSR)
          / GET TO J2=1 FROM D6=* VIA BUT JSRMP (INST=JSR)
212  261  J2=1  NOP
          / J2=1 MUST BE A NOP BECAUSE FOLLOWING A CKOFF, THE AMX WILL BE
          / FORCED TO TAKE DATA FROM THE UNIBUS,
261  262  J2=1A R[11]=B
262  214  J2=2  B,BA=R[6]=2; ENABOVER
214  206  J2=3  R[6]=B; CKOFF; DATO
206  216  J2=4  DRIVERS=R[S]
216  263  J2=5  B=PC
263  264  J2=6  R[S]=B
264  265  J2=7  B=R[11]
265  040  J2=8  PC=B; BUT SERVICE
          / PRIORITIES ARE LISTED HIGHEST TO LOWEST
          / IF T BIT TRAP GOTO BT=1
          / IF STACK OVERFLOW GOT ERT1A
          / IF POWER FALIL GOTO PF=1
          / IF BR7 GOTO BG=1
          / IF BR6 GOTO BG=1
          / IF INTERNAL LINE CLOCK GOTO LC=1
          / IF BR5 GOTO BG=1
          / IF BR4 GOTO BG=1
          / IF UART RECEIVE GOTO URTR
          / IF UART TRANSMIT GOTO URTX
          / IF CONSOLE STOP GOTO H=1
          / IF NONE OF THE ABOVE GOTO F=1
```

```
LOC  NXT  * RTS
          / GET TO R1=1 FROM F=5 VIA BUT IR DECODE (INST=RTS)
005  221  R1=1  BA=R[6]; DATI
221  222  R1=2  B=R[6]=2
222  223  R1=3  R[6]=B
223  224  R1=4  B=R[D]
224  225  R1=5  PC=B; CKOFF
225  332  R1=6  B=UNIBUS DATA; GOTO D0=4
```

```
LOC  NXT  * RTI
          / GET TO R2=2 FROM F=5 VIA BUT IR DECODE (INST=RTI)
227  230  R2=1  BA=R[6]; DATI
230  231  R2=2  B=R[6]=2
```



```
231  232  R2=3  R[6]=B; CKOFF
232  234  R2=4  PC=UNIBUS DATA
          / THERE IS NO R2=5 (ANY MORE)
234  235  R2=6  BA=R[6]; DATI
235  236  R2=7  B=R[6]=2
236  237  R2=8  R[6]=B; CKOFF
237  305  R2=9  PS=UNIBUS DATA; GOTO B2=2 (BUT SERVICE)
```

```
LOC  NXT  * WAIT
          / GET TO W=1 FROM F=5 VIA BUT IR DECODE (INST=WAIT)
          / GET TO W=1 FROM W=1 VIA GOTO IF BUT SERVICE IS FALSE
063  040  W=1   BUT SERVICE
          / THE MICRO PROGRAM WILL LOOP ON W=1 UNTIL SOME HIGHER
          / PRIORITY CONDITION IS RECOGNIZED BY THE 'BUT SERVICE' ROM SEE F101 ON
          / THE CONE PRINT',
          / PRIORITIES ARE LISTED HIGHEST TO LOWEST
          / IF T BIT TRAP GOTO BT=1
          / IF STACK OVERFLOW GOTO ERT1A
          / IF POWER FAIL GOT PF=1
          / IF BR7 GOTO BG=1
          / IF BR6 GOTO BG=1
          / IF INTERNAL LINE CLOCK GOTO LC=1
          / IF BR5 GOTO BG=1
          / IF BR4 GOTO BG=1
          / IF UART RECEIVE URTR
          / IF UART TRANSMIT TOTO URTX
          / IF CONSOLE STOP GOTO H=1
          / IF NONE OF THE ABOVE TOTO F=1
```

```
LOC  NXT  * HALT
          / GET TO H=1 FROM F=5 VIA BUT IR DECODE (INST=HALT)
          / GET TO H=1 FROM BUT SERVICE
041  302  H=1   B=PC
          / DISPLAY PC IN LIGHTS BY PUTTING IT INTO B
          / GET TO H=2 FROM CE1=3 VIA GOTO
          / GET TO H=2 FROM CD1=5 VIA GOTO
          / GET TO H=2 FROM CL=3 VIA GOTO
302  300  H=2   BA=R[17]; BUT SWITCH
          / THE BA IS LOADED HERE SO THAT THE ADDRESS WILL BE INCREMENTED BY +1 WHEN EXAMINING (DEPOSITING INT
          / AND BY +2 WHEN EXAMINING (DEPOSITING INTO) SUCCESSIVE CORE MEMORY',
          / IF START DEPRESSED GOTO CS=1
          / IF CONTINUE DEPRESSED GOTO CCS=1
```

```
        / IF EXAMINE (1 ST) GOTO CE1=1

        / IF EXAMINE (NOT 1 ST) GOTO CE2=1
        / IF DEPOSIT (1 ST) GOTO CD1=1
        / IF DEPOSIT (NOT 1 ST) GOT CD2=1
        / IF LOAD GOTO CL=1
        / IF NO SWITCHES ARE DEPRESSED LOOP ON H=2



LOC  NXT  * EMT TRAP (VECTOR LOC=30)
          / GET TO ET=1 FROM F=5 VIA BUT IR DECODE (INST=EMT)
011  245  ET=1  B=K[30]
          / GET TO ET=2 FROM BT=1 VIA GOTO
          / GET TO ET=2 FROM IT=1 VIA GOTO
          / GET TO ET=2 FROM T=1 VIA GOTO
          / GET TO ET=1 FROM RT=1 VIA GOTO
          / GET TO ET=2 FROM ERT=1 VIA GOTO
          / GET TO ET=2 FROM PF=1 VIA GOTO
245  246  ET=2  R[12]=B
246  247  ET=3  B,BA=R[6]=2; ENABOVER
          / ET=4 HAS BEEN ELIMINATED
247  226  ET=5  R[6]=B; CKOFF; DATO
226  251  ET=6  DIRVERS=PS
251  252  ET=7  B,BA=R[6]=2; ENABOVER
252  253  ET=8  R[6]=B; CKOFF; DATO
253  254  ET=9  DIRVERS=PC
254  255  ET=10 BA=R[12]; DATI; CKOFF
255  256  ET=11 PC=UNIBUS DATA
256  257  ET=12 BA=R[12]+2; DATI; CKOFF
257  305  ET=13 PS=UNIBUS DATA;  GOTO B2=2 (SERVICE)


LOC  NXT  * BREAKPOINT TRAP (VECTOR LOC=14) AND T BIT TRACE TRAP
          / GET TO BT=1 FROM ALL BUT SERVICE
          / GET TO BT=1 FROM F=5 VIA BUT IR DECODE (INST=BREAKPOINT)
045  245  BT=1  B=K[14]; GOTO ET=2



LOC  NXT  * IOT (VECTOR LOC=20)
          / GET TO IT=1 FROM F=5 VIA BUT IR DECODE (INST=IOT
273  245  IT=1  B=K[20]; GOTO ET=2
```



```
LOC  NXT  * TRAP (VECTOR LOC=34)
          / GET TO T=1 FROM F=5 VIA BUT IR DECODE (INST=TRAP)
021  245  T=1   B=K[34]; GOTO ET=2



LOC  NXT  * RESERVED INST TRAP (VECTOR LOC=10)
          / GET TO RT=1 FROM F=5 VIA BUT IR DECODE (INST=NON VALID)
001  245  RT=1  B=K[10]; GOTO ET=2



LOC  NXT  * ERROR TRAP (BUS ERROR, STACK OVERFLOW, ILLEGAL INST) VECTOR LOC=4
          / THERE EXISTS ERT=1 (LOC=10) FOR BUS ERROR
          / THERE ALSO EXISTS ERT1A (LOC=46) FOR STACK OVERFLOW
          / ERT1A GOES TO ET2=2, A SEQUENCE WHICH DOESN'T HAVE THE
          / ENABOVER,  WE DON'T WANT TO LOOK FOR STACK OVERFLOW WHILE
          / DOING THE STACK OVERFLOW TRAP,  THE ET2=2 SEQUENCE REJOINS THE ET SEQUENCE AT ET=8
          / THERE ALSO EXISTS ERT1B (LOC=153) FOR ILLEGAL INST (JSR OR JMP, MODE 0)
010  245  ERT=1 B=K[4]; GOTO ET=2



LOC  NXT  * CONSOLE START SWITCH
          / GET TO CS=1 FOLLOWING RELEASE OF START SWITCH,
100  322  CS=1  IR=ZERO
          / CLOCKING THE IR TURNS ON THE RUN LIGHT
322  321  CS=2  BA,B=R[17]
321  040  CS=3  PC=B; BUT SERVICE
          / PRIOIRTIES ARE LISTED HIGHEST TO LOWEST
          / IF T BIT BRAP GOTO BT=1
          / IF STACK OVERFLOW GOTO ERT1A
          / IF POWER FAIL GOTO PF=1
          / IF BR7 GOTO BG=1
          / IF BR6 GOTO BG=1
          / IF INTERNAL LINE CLOCK GOTO LC=1
          / IF BR5 GOTO BG=1
```

```
        / IF BR4 GOTO BG=1
        / IF UART RECEIVE GOTO URTR
        / IF UART TRANSMIT GOTO URTX
        / IF CONSOLE STOP GOTO H=1
        / IF NONE OF THE ABOVE GOTO F=1



LOC  NXT  * CONSOLE EXAMINE SWITCH= FIRST TIME IN SEQUENCE (DON'T INC R[17])
          / GET TO CE1=1 FROM H=2 VIA BUT SWITCH
          / GET TO CE1=1 FROM CE2=2 VIA GOTO
317  307  CE1=1 BA,B=R[17]; BUT SWITCH
          / DISPLAY ADDRESS BY PUTTING INTO THE B REGISTER WHILE EXAMINE IS DOWN
          / LOOP ON CE1=1 UNTIL SWITCH IS RELEASED
307  326  CE1=2 DATI; CKOFF
326  302  CE1=3 B=UNIBUS DATA; GOTO H=2



LOC  NXT  * CONSOLE EXAMINE SWITCH = OTHER THAN FIRST IN SEQUENCE (INC R[17])
          / GET TO CE2=1 FROM H=2 VIA BUT SWITCH
315  371  CE2=1 B=R[17]+2
          / R[17] IS IN BA FROM H=2, THIS WILL CAUSE +2 TO BECOME +1 WHEN EXAMINING REGISTERS,
371  317  CE2=2 R[17]=B; GOTO CE1=1
```

```
LOC  NXT  * CONSOLE DEPOSIT SWITCH = FIRST TIME IN SEQUENCE (DON'T INC R[17])
          / GET TO CD1=1 FROM H=2 VIA BUT SWITCH
          / GET TO CD1=1 FROM CD2=2 VIA GOTO
313  303  CD1=1 B=R[17]; BUT SWITCH
          / LOOP ON CD1=1 UNTIL DEPOSIT SWITCH IS RELEASED
303  374  CD1=2 BA=K[207],BAR; DATI; CKOFF
          / COMPLEMENT OF 207 = 177570 = SWITCH REGISTER ADDRESS
374  314  CD1=3 B=UNIBUS DATA
314  372  CD1=4 BA=R[17]; DATO; CKOFF
372  302  CD1=5 DRIVERS=B; GOTO H=2
```



```
LOC  NXT  * CONSOLE DEPOSIT SWITCH = OTHER THAN FIRST IN SEQENCE (INC R[17])
          / GET TO CD2=1 FROM H=3) VIA BUT SWITCH
312  337  CD2=1 B=R[17]+2
          / R[17] IS IN BA, THIS WILL CAUSE +2 TO BECOME +1 WHEN DEPOSITING INTO REGISTERS
337  313  CD2=2 R[17]=B; GOTO CD1=1
```

```
LOC  NXT  * CONSOLE CONTINUE SWITCH
          / GET TO CCS=1 FROM H=2 VIA BUT SWITCH
316  276  CCS=1 B=PC
276  270  CCS=2 BUT SWITCH
272  062  CCS=3 IR=ZERO; GOTO F=1
          / CLOCKING THE IR TURNS ON THE RUN LIGHT



LOC  NXT  * CONSOLE LOAD SWITCH
          / GET TO CL=1 FROM H=2 VIA BUT SWITCH
311  375  CL=1  BA=K[207],BAR; DATI; CKOFF
          / COMPLEMENT OF 207 = 177570 = SWITCH REGISTER ADDRSS
375  367  CL=2  B=UNIBUS DATA
367  302  CL=3  R[17]=B; GOTO H=2
          / CL=3 GOES TO H=2 VIA GOTO, IF LOAD IS STILL DEPRESSED, THE BUT
          / SWITCH IN H=2 WILL TAKE US BACK TO CL=1,  THUS, AS LONG AS LOAD IS
          / DEPPRESSED, CHANGES IN THE SWITCHES WILL SHOW UP IN THE B REG (LIGHTS) AND IN R[17],



LOC  NXT  * POWER FAIL (VECTOR LOC=24)
          / GET TO PF=1 FROM SERVICE
043  245  PF=1  B=K[24]; GOTO ET=2



LOC  NXT  * RESTART FROM POWER FAIL (VECTOR LOC=24)
          / GET TO RS=1 MYSTERIOUSLY AS POWER COMES UP ( NXT CHIPS, F092 AND F103 SHOWN ON THE CONF PRINT,
          / ARE DISABLED FORCING THE MICROPROGRAM TO RS=1 IN LOC 0',
000  241  RS=1  BA=K[24]; DATI
241  347  RS=1A CKOFF
```

```
        / MUST DO CKOFF IN RS=1A BECAUSE OF CONFLICT BETWEEN
        / CKOFF AND INIT CREATED BY CKOFF ASSOCIATED WITH AUX CONTROL
347  074  RS=2  PC=UNIBUS DATA
074  351  RS=3  BA=K[24]+2; DATI; CKOFF
351  305  RS=4  PS=UNIBUS DATA;  GOTO B2=2 (SERVICE)



LOC  NXT  * INTERRUPT SERVICING
        / GET TO INT=1 FROM BG=2 VIA BUT INT (TRUE)
325  246  INT=1 R[12]=UNIBUS DATA; SET SLAVESYNC; GOTO ET=3



LOC  NXT  * BUS GRANT SERVICE
        / GET TO BG=1 FROM BUT SERVICE
040  305  BG=1  BUT INTERRUPT; GOTO B2=2 (BUT SERVICE)
        / IF INTERRUPT GOTO INT=1
        / IF NO INTERRUPT FALL THROUGH TO B2=2



LOC  NXT  * NOP = BRANCH CONDITION NOT TRUE (PC UNCHANGED)
        / B2=1 HAS BEEN ELIMINATED BECAUSE NEWI IS NO LONGER
        / GET TO B2=2A FROM D0=3 VIA BUT NONMOD (TRUE)
        / GET TO B2=2B FROM D1=4 VIA BUT NONMOD (TRUE)
        / GET TO B2=2C FROM DQ=10 VIA BUT NONMOD (TRUE)
        / GET TO B2=2D FROM F=5 VIA BUT IR DECODE, BRANCH INST, CONDITION NOT TRUE
        / GET TO B2=2 FROM RST=1 VIA GOTO
        / GET TO B2=2 FROM D0=4 VIA GOTO
        / GET TO B2=2 FROM DB0=2  VIA BUT NONMOD (TRUE)
        / GET TO B2=2 FROM MB=2 VIA GOTO
        / GET TO B2=2 FROM CC=1 VIA GOTO
        / GET TO B2=2 FROM SC=1 VIA GOTO
        / GET TO B2=2 FROM J2=8 VIA GOTO
        / GET TO B2=2 FROM RS=10 VIA GOTO
        / GET TO B2=2 FROM ET=13 VIA GOTO
305  040  B2=2  BUT SERVICE
        / PRIORITIES ARE LISTED HIGHEST TO LOWEST
        / IF T BIT TRAP GOTO BT=1
        / IF STACK OVERFLOW GOTO ERT1A
        / IF POWER FAIL GOTO PF=1
        / IF BR7 GOTO BG=1
```



```
        / IF BR6 GOTO BG=1
        / IF INTERNAL LINE CLOCK GOTO LC=1
        / IF BR5 GOTO BG=1
        / IF BR4 GOTO BG=1
        / IF UART RECEIVE GOTO URTR
        / IF UART TRANSMIT GOTO URTX
        / IF CONSOLE STOP GOTO H=1
        / IF NONE OF THE ABOVE GOTO F=1



LOC  NXT  * RESET
        / GET TO RST=1 FROM F=5 VIA BUT IR DECODE (INST=RESET)
357  305  RST=1 BUT INIT; CKOFF; GOTO B2=2 (BUT SERVICE)



LOC  NXT  * DOUBLE BUS ERROR, GOTO HALT
110  041  DBE=1 NOP; GOTO H=1



LOC  NXT  * UART XMIT (VECTOR LOC 64)
060  245  URTX  B=K[64]; GOTO ET=2



LOC  NXT  * UART RECEIVE (VECTOR LOC 60)
064  245  URTR  B=K[60]; GOTO ET=2



LOC  NXT  * LINE CLOCK (VECTOR LOC 100)
042  245  LC=1  B=K[100]; GOTO ET=2
```

ERT1A NOT EXPLICITLY SHOWN IN FLOW
D0-3A NOT EXPLICITLY SHOWN IN FLOW
A145 NOT EXPLICITLY SHOWN IN FLOW
ET2-2 NOT EXPLICITLY SHOWN IN FLOW
ET2-3 NOT EXPLICITLY SHOWN IN FLOW
ET2-5 NOT EXPLICITLY SHOWN IN FLOW
ET2-6 NOT EXPLICITLY SHOWN IN FLOW
ET2-7 NOT EXPLICITLY SHOWN IN FLOW
ERT1B NOT EXPLICITLY SHOWN IN FLOW
B2-2A NOT EXPLICITLY SHOWN IN FLOW
B2-2B NOT EXPLICITLY SHOWN IN FLOW
B2-2C NOT EXPLICITLY SHOWN IN FLOW
B2-2D NOT EXPLICITLY SHOWN IN FLOW

PAGE REVISION CONTROL SHEET

SH NO.	PAGE REVISIONS	REMARKS
1	A B C	
2	A A A	
3	A B B	
4	A A B	
5	A A A	
6	A A A	

DATE	ENG.	ETCH REV.	ECO NO.
8-21-72	BA		00002
9-24-72	MT		KD11B 00003
10-30-72	MT		KD11B 00004

FIRST USED ON OPTION/MODEL

KD11-B

DRN. A. Town	DATE 8-21-72	
CHK'D. D McCullough	DATE 8-21-72	
ENG. B. ARMSTRONG	DATE 8-29-72	
PROJ. ENG. B. ARMSTRONG	DATE 8-29-72	
PROD.	DATE	

digital EQUIPMENT CORPORATION
MAYNARD, MASSACHUSETTS

TITLE
MICROPROGRAM
SYMBOLIC
LISTING

NEXT HIGHER ASSY.
B-DD-KD11-B

SCALE --

SHEET 1 OF 6

SIZE	CODE	NUMBER	REV.
K	MP	KD11-B-2	C

DIST.

"THIS DRAWING AND SPECIFICATIONS, HEREIN, ARE THE PROPERTY OF DIGITAL EQUIPMENT CORPORATION AND SHALL NOT BE REPRODUCED OR COPIED OR USED IN WHOLE OR IN PART AS THE BASIS FOR THE MANUFACTURE OR SALE OF ITEMS WITHOUT WRITTEN PERMISSION.
COPYRIGHT © 1972 DIGITAL EQUIPMENT CORPORATION"

NAME	LOC	ABT	ALG	ALU	AUX	BAR	BLG	BRG	BUT	CON	CKO	CRI	FSH	PSW	SAM	SPA	SPF	TNS	NXT
A145	145	YES	PSW	AA	ON	L	+1	H	MOV	NON	ON	OFF	OFF	L	ROM	R0	WRI	ZRO	
B=1	015	NO	SP	ASL	OFF	H	BRG	SL	NON	NON	OFF	OFF	OFF	H	ROM	R0	REA	NON	B=2
B=2	147	NO	SP	A+B	OFF	H	BRG	L	NON	NON	OFF	OFF	OFF	H	ROM	R7	REA	NON	B=3
B=3	146	NO	SP	BL	OFF	H	BRG	H	SRV	NON	OFF	OFF	OFF	H	ROM	R7	WRI	NON	BG=1
B2=2	305	NO	SP	AL	OFF	H	BRG	H	SRV	NON	OFF	OFF	OFF	H	ROM	R0	REA	NON	BG=1
B2=2A	333	NO	SP	AL	OFF	H	BRG	H	SRV	NON	OFF	OFF	OFF	H	ROM	R0	REA	NON	BG=1
B2=2B	335	NO	SP	AL	OFF	H	BRG	H	SRV	NON	OFF	OFF	OFF	H	ROM	R0	REA	NON	BG=1
B2=2C	343	NO	SP	AL	OFF	H	BRG	H	SRV	NON	OFF	OFF	OFF	H	ROM	R0	REA	NON	BG=1
B2=2D	013	NO	SP	AL	OFF	H	BRG	H	SRV	NON	OFF	OFF	OFF	H	ROM	R0	REA	NON	BG=1
BG=1	040	NO	SP	AL	OFF	H	BRG	H	INT	NON	OFF	OFF	OFF	H	ROM	R0	REA	NON	B2=2
BT=1	045	NO	NUL	AL	OFF	H	BRG	L	CON	14	OFF	OFF	OFF	H	ROM	R0	WRI	NON	ET=2
CC=1	112	NO	PSW	ABBAR	OFF	H	BRG	H	SRV	NON	OFF	OFF	OFF	L	ROM	R0	REA	NON	BG=1
CCM=1	151	NO	NUL	AANDB	OFF	H	BRG	L	CON	360	OFF	OFF	OFF	H	ROM	R0	WRI	NON	CCM=2
CCM=2	350	NO	SP	AL	OFF	H	BRG	H	DST	NON	OFF	OFF	OFF	H	ROM	R0	REA	NON	CC=1
CCS=1	316	NO	SP	AL	OFF	H	BRG	L	NON	NON	OFF	OFF	OFF	H	ROM	R7	REA	NON	CCS=2
CCS=2	276	NO	SP	AL	OFF	H	BRG	H	SW	NON	OFF	OFF	OFF	H	ROM	R0	REA	NON	DO=1
CCS=3	272	NO	SP	ZERO	OFF	H	BRG	H	IRC	NON	OFF	OFF	OFF	H	ROM	R0	REA	NON	F=1
CD1=1	313	NO	SP	AL	OFF	H	BRG	L	SW	NON	OFF	OFF	OFF	H	ROM	R17	REA	NON	CD1=2
CD1=2	303	NO	NUL	ABAR	OFF	L	BRG	H	CON	207	ON	OFF	OFF	H	ROM	R0	WRI	!	CD1=3
CD1=3	374	NO	NUL	AL	OFF	H	BRG	L	NON	NON	OFF	OFF	OFF	H	BAR	R0	REA	NON	CD1=4
CD1=4	314	NO	SP	AL	OFF	L	BRG	H	NON	NON	ON	OFF	OFF	H	ROM	R17	REA	0	CD1=5
CD1=5	372	NO	SP	BL	OFF	H	BRG	H	NON	NON	OFF	OFF	OFF	H	BAR	R0	REA	NON	H=2
CD2=1	312	NO	SP	A+B	OFF	H	+1	L	NON	NON	OFF	ON	OFF	H	ROM	R17	REA	NON	CD2=2
CD2=2	337	NO	SP	BL	OFF	H	BRG	H	NON	NON	OFF	OFF	OFF	H	ROM	R17	WRI	NON	CD1=1
CE1=1	317	NO	SP	AL	OFF	L	BRG	L	SW	NON	OFF	OFF	OFF	H	ROM	R17	REA	NON	CE1=2
CE1=2	307	NO	SP	AL	OFF	H	BRG	H	NON	NON	ON	OFF	OFF	H	ROM	R0	REA	!	CE1=3
CE1=3	326	NO	NUL	AL	OFF	H	BRG	L	NON	NON	OFF	OFF	OFF	H	BAR	R0	REA	NON	H=2
CE2=1	315	NO	SP	A+B	OFF	L	+1	L	NON	NON	OFF	ON	OFF	H	ROM	R17	REA	NON	CE2=2
CE2=2	371	NO	SP	BL	OFF	H	BRG	H	NON	NON	OFF	OFF	OFF	H	ROM	R17	WRI	ON	CE1=1
CL=1	311	NO	NUL	ABAR	OFF	L	BRG	H	CON	207	ON	OFF	OFF	H	ROM	R0	WRI	!	CL=2
CL=2	375	NO	NUL	AL	OFF	H	BRG	L	NON	NON	OFF	OFF	OFF	H	BAR	R0	REA	NON	CL=3
CL=3	367	NO	SP	BL	OFF	H	BRG	H	NON	NON	OFF	OFF	OFF	H	ROM	R17	WRI	NON	H=2
CS=1	100	NO	SP	ZERO	OFF	H	BRG	H	IRC	NON	OFF	OFF	OFF	H	ROM	R0	REA	NON	CS=2
CS=2	322	NO	SP	AL	OFF	L	BRG	L	NON	NON	OFF	OFF	OFF	H	ROM	R17	REA	NON	CS=3
CS=3	321	NO	SP	BL	OFF	H	BRG	H	SRV	NON	OFF	OFF	OFF	H	ROM	R7	WRI	NON	BG=1
D0=1	101	NO	SP	AL	OFF	H	BRG	L	MOV	NON	OFF	OFF	OFF	H	IRD	R0	REA	NON	MB=0
D0=2	157	NO	SP	BL	OFF	H	BRG	H	UNY	NON	OFF	OFF	OFF	H	ROM	R11	WRI	NON	DO=17
D0=3	162	NO	SP	ABAR	ON	H	BRG	L	NMD	NON	OFF	ON	OFF	H	ROM	R10	REA	NON	D0=4
D0=3A	155	NO	SP	ABAR	ON	H	BRG	L	NMD	NON	OFF	ON	OFF	H	ROM	R10	REA	NON	D0=4
D0=4	332	NO	SP	BL	OFF	H	BRG	H	SRV	NON	OFF	OFF	OFF	H	IRD	R0	WRI	NON	BG=1
D1=1	103	YES	SP	AL	OFF	L	BRG	L	JOJ	NON	ON	OFF	OFF	H	IRD	R0	REA	IP	D1=2
D1=2	200	NO	NUL	AL	OFF	H	BRG	L	BYT	NON	OFF	OFF	OFF	H	BAR	R0	REA	NON	D1=3
D1=3	210	NO	SP	BL	OFF	H	BRG	H	UNY	NON	OFF	OFF	OFF	H	ROM	R11	WRI	NON	DO=18
D1=4	163	NO	SP	ABAR	ON	H	BRG	L	NMD	NON	OFF	ON	OFF	H	ROM	R10	REA	NON	D1=5

NAME	LOC	ABT	ALG	ALU	AUX	BAR	BLG	BRG	BUT	CON	CKO	CRI	FSH	PSW	SAM	SPA	SPF	TNS	NXT
D1=5	334	YES	SP	AL	OFF	H	BRG	H	NON	NON	ON	OFF	OFF	H	ROM	R0	REA	0	D1=6
D1=6	065	NO	SP	BL	OFF	H	BRG	H	NON	NON	OFF	OFF	OFF	H	ROM	R0	REA	NON	B2=2
D2=1	105	YES	SP	AL	OFF	L	BRG	H	NON	NON	OFF	OFF	OFF	H	IRD	R0	REA	IP	D2=2
D2=2	331	NO	SP	A+B	OFF	H	+1	L	NON	NON	OFF	ON	OFF	H	IRD	R0	REA	NON	D2=3
D2=3	341	NO	SP	BL	OFF	H	BRG	H	JOJ	NON	ON	OFF	OFF	H	IRD	R0	WRI	NON	D1=2
D3=1	107	NO	SP	AL	OFF	L	BRG	H	NON	NON	OFF	OFF	OFF	H	IRD	R0	REA	I	D3=2
D3=2	160	NO	SP	A+B	OFF	H	+1	L	NON	NON	OFF	ON	OFF	H	IRD	R0	REA	NON	D3=3
D3=3	070	NO	SP	BL	OFF	H	BRG	H	NON	NON	ON	OFF	OFF	H	IRD	R0	WRI	NON	D3=4
D3=4	071	NO	NUL	AL	OFF	H	BRG	L	NON	NON	OFF	OFF	OFF	H	BAR	R0	REA	NON	D3=5
D3=5	072	YES	SP	BL	OFF	L	BRG	H	JOJ	NON	ON	OFF	OFF	H	ROM	R0	REA	IP	D1=2
D4=1	111	YES	SP	A-B-1	OFF	L	+1	L	END	NON	OFF	OFF	OFF	H	IRD	R0	REA	I	D3=3
D6=1	115	NO	SP	AL	OFF	L	BRG	H	NON	NON	OFF	OFF	OFF	H	ROM	R7	REA	I	D6=2
D6=2	075	NO	SP	A+B	OFF	H	+1	L	NON	NON	OFF	ON	OFF	H	ROM	R7	REA	NON	D6=3
D6=3	077	NO	SP	BL	OFF	H	BRG	H	NON	NON	ON	OFF	OFF	H	ROM	R7	WRI	NON	D6=4
D6=4	057	NO	NUL	AL	OFF	H	BRG	L	NON	NON	OFF	OFF	OFF	H	BAR	R0	REA	NON	D6=5
D6=5	300	YES	SP	A+B	OFF	L	BRG	L	JOJ	NON	ON	OFF	OFF	H	IRD	R0	REA	IP	D1=2
D7=1	117	NO	SP	AL	OFF	L	BRG	H	NON	NON	OFF	OFF	OFF	H	ROM	R7	REA	I	D7=2
D7=2	310	NO	SP	A+B	OFF	H	+1	L	NON	NON	OFF	ON	OFF	H	ROM	R7	REA	NON	D7=3
D7=3	104	NO	SP	BL	OFF	H	BRG	H	NON	NON	ON	OFF	OFF	H	ROM	R7	WRI	NON	D7=4
D7=4	320	NO	NUL	AL	OFF	H	BRG	L	NON	NON	OFF	OFF	OFF	H	BAR	R0	REA	NON	D7=5
D7=5	106	NO	SP	A+B	OFF	L	BRG	H	NON	NON	ON	OFF	OFF	H	IRD	R0	REA	I	D3=4
DB0=1	156	NO	SP	BL	OFF	H	SEX	L	UNY	NON	OFF	OFF	OFF	H	ROM	R11	WRI	NON	SB1=5
DB0=2	164	NO	SP	ABAR	ON	H	BRG	L	NMD	NON	OFF	ON	OFF	H	ROM	R10	REA	NON	DB0=3
DB0=3	304	NO	SPR	BL	OFF	H	BRG	H	SRV	NON	OFF	OFF	OFF	H	IRD	R0	WRI	NON	BG=1
DBE=1	110	NO	SP	AL	OFF	H	BRG	H	NON	NON	OFF	OFF	OFF	H	ROM	R0	REA	NON	H=1
DE=1	250	NO	SP	BL	OFF	H	SEX	L	UNY	NON	OFF	OFF	OFF	H	ROM	R11	WRI	NON	D1=4
DO=1	270	NO	SP	AL	OFF	H	BRG	SR	NON	NON	OFF	OFF	ON	H	ROM	R0	REA	NON	DO=2
DO=10	165	NO	SP	ABAR	ON	H	BRG	L	NMD	NON	OFF	ON	OFF	H	ROM	R10	REA	NON	DO=11
DO=11	342	NO	SP	AL	OFF	H	BRG	SL	NON	NON	OFF	OFF	ON	H	ROM	R0	REA	NON	DO=12
DO=12	135	NO	SP	AL	OFF	H	BRG	SL	NON	NON	OFF	OFF	ON	H	ROM	R0	REA	NON	DO=13
DO=13	136	NO	SP	AL	OFF	H	BRG	SL	NON	NON	OFF	OFF	ON	H	ROM	R0	REA	NON	DO=14
DO=14	137	NO	SP	AL	OFF	H	BRG	SL	NON	NON	OFF	OFF	ON	H	ROM	R0	REA	NON	DO=15
DO=15	140	NO	SP	AL	OFF	H	BRG	SL	NON	NON	OFF	OFF	ON	H	ROM	R0	REA	NON	DO=16
DO=16	141	NO	SP	AL	OFF	H	BRG	SL	NON	NON	OFF	OFF	ON	H	ROM	R0	REA	NON	DO=17
DO=17	142	NO	SP	AL	OFF	H	BRG	SL	NON	NON	OFF	OFF	ON	H	ROM	R0	REA	NON	DO=18
DO=18	143	YES	SP	AL	OFF	H	BRG	SL	NON	NON	ON	OFF	OFF	H	ROM	R0	REA	0	D1=6
DO=2	123	NO	SP	AL	OFF	H	BRG	SR	NON	NON	OFF	OFF	ON	H	ROM	R0	REA	NON	DO=3
DO=3	124	NO	SP	AL	OFF	H	BRG	SR	NON	NON	OFF	OFF	ON	H	ROM	R0	REA	NON	DO=4
DO=4	125	NO	SP	AL	OFF	H	BRG	SR	NON	NON	OFF	OFF	ON	H	ROM	R0	REA	NON	DO=5
DO=5	126	NO	SP	AL	OFF	H	BRG	SR	NON	NON	OFF	OFF	ON	H	ROM	R0	REA	NON	DO=6
DO=6	127	NO	SP	AL	OFF	H	BRG	SR	NON	NON	OFF	OFF	ON	H	ROM	R0	REA	NON	DO=7
DO=7	130	NO	SP	AL	OFF	H	BRG	SR	NON	NON	OFF	OFF	ON	H	ROM	R0	REA	NON	DO=8
DO=8	131	NO	SP	AL	OFF	H	BRG	SR	NON	NON	OFF	OFF	OFF	H	ROM	R0	REA	NON	DO=9

NAME	LOC	ABT	ALG	ALU	AUX	BAR	BLG	BRG	BUT	CON	CKO	CRI	FSH	PSW	SAM	SPA	SPF	TNS	NXT
D0-9	132	NO	SP	BL	OFF	H	SEX	L	UNY	NON	OFF	OFF	OFF	H	ROM	R11	WRI	NON	A145
ERT-1	013	NO	NUL	AL	OFF	H	BRG	L	CON	4	OFF	OFF	OFF	H	ROM	RØ	WRI	NON	ET-2
ERT1A	046	NO	NUL	AL	OFF	H	BRG	L	CON	4	OFF	OFF	OFF	H	ROM	RØ	WRI	NON	ET2-2
ERT1B	153	NO	NUL	AL	OFF	H	BRG	L	CON	4	OFF	OFF	OFF	H	ROM	RØ	WRI	NON	ET-2
ET-1	011	NO	NUL	AL	OFF	H	BRG	L	CON	30	OFF	OFF	OFF	H	ROM	RØ	WRI	NON	ET-2
ET-10	254	NO	SP	AL	OFF	L	BRG	H	IRC	NON	ON	OFF	OFF	H	ROM	R12	REA	I	ET-11
ET-11	255	NO	SP	AL	OFF	H	BRG	L	NON	NON	OFF	OFF	OFF	H	ROM	R7	WRI	NON	ET-12
ET-12	256	NO	SP	A+B	OFF	L	+1	L	NON	NON	ON	ON	OFF	H	ROM	R12	REA	I	ET-13
ET-13	257	NO	SP	AL	OFF	H	BRG	L	NON	NON	OFF	OFF	OFF	L	ROM	RØ	REA	NON	B2-2
ET-2	245	NO	SP	BL	OFF	H	BRG	H	NON	NON	OFF	OFF	OFF	H	ROM	R12	WRI	NON	ET-3
ET-3	246	NO	SP	A-B-1	OFF	L	+1	L	ENO	NON	OFF	OFF	OFF	H	ROM	R6	REA	NON	ET-5
ET-5	247	NO	SP	BL	OFF	H	BRG	H	NON	NON	ON	OFF	OFF	H	ROM	R6	WRI	0	ET-6
ET-6	226	NO	PSW	AL	OFF	H	BRG	H	NON	NON	OFF	OFF	OFF	H	ROM	RØ	REA	NON	ET-7
ET-7	251	NO	SP	A-B-1	OFF	L	+1	L	ENO	NON	OFF	OFF	OFF	H	ROM	R6	REA	NON	ET-8
ET-8	252	NO	SP	BL	OFF	H	BRG	H	NON	NON	ON	OFF	OFF	H	ROM	R6	WRI	0	ET-9
ET-9	253	NO	SP	AL	OFF	H	BRG	H	NON	NON	OFF	OFF	OFF	H	ROM	R7	REA	NON	ET-10
ET2-2	003	NO	SP	BL	OFF	H	BRG	L	NON	NON	OFF	OFF	OFF	H	ROM	R12	WRI	NON	ET2-3
ET2-3	004	NO	SP	A-B-1	OFF	L	+1	L	NON	NON	OFF	OFF	OFF	H	ROM	R6	REA	NON	ET2-5
ET2-5	036	NO	SP	BL	OFF	H	BRG	H	NON	NON	ON	OFF	OFF	H	ROM	R6	WRI	0	ET2-6
ET2-6	037	NO	PSW	AL	OFF	H	BRG	H	NON	NON	OFF	OFF	OFF	H	ROM	RØ	REA	NON	ET2-7
ET2-7	051	NO	SP	A-B-1	OFF	L	+1	L	NON	NON	OFF	OFF	OFF	H	ROM	R6	REA	NON	ET-8
F-1	062	NO	SP	AL	OFF	L	BRG	H	NON	NON	OFF	OFF	OFF	H	ROM	R7	REA	I	F-2
F-2	253	NO	SP	A+B	OFF	H	+1	L	NON	NON	OFF	ON	OFF	H	ROM	R7	REA	NON	F-3
F-3	365	NO	SP	BL	OFF	H	BRG	H	NON	NON	ON	OFF	OFF	H	ROM	R7	WRI	NON	F-4
F-4	364	NO	NUL	AL	OFF	H	BRG	L	IRC	NON	OFF	OFF	OFF	H	BAR	RØ	REA	NON	F-5
F-5	061	NO	SP	BL	OFF	H	SEX	L	IRD	NON	OFF	OFF	OFF	H	ROM	RØ	REA	NON	RT-1
H-1	041	NO	SP	AL	OFF	H	BRG	L	NON	NON	OFF	OFF	OFF	H	ROM	R7	REA	NON	H-2
H-2	302	NO	SP	AL	OFF	L	BRG	H	SW	NON	OFF	OFF	OFF	H	ROM	R17	REA	NON	D6-5
INT-1	325	NO	SP	AL	OFF	H	BRG	H	SVS	NON	OFF	OFF	OFF	H	ROM	R12	WRI	NON	ET-3
IT-1	273	NO	NUL	AL	OFF	H	BRG	L	CON	20	OFF	OFF	OFF	H	ROM	RØ	WRI	NON	ET-2
J1-1	204	NO	SP	AL	OFF	H	BRG	H	NON	NON	OFF	OFF	OFF	H	ROM	RØ	REA	NON	J1-2
J1-2	260	NO	SP	BL	OFF	H	BRG	H	SRV	NON	OFF	OFF	OFF	H	ROM	R7	WRI	NON	BG-1
J2-1	212	NO	SP	AL	OFF	H	BRG	H	NON	NON	OFF	OFF	OFF	H	ROM	RØ	REA	NON	J2-1A
J2-1A	261	NO	SP	BL	OFF	H	BRG	H	NON	NON	OFF	OFF	OFF	H	ROM	R11	WRI	NON	J2-2
J2-2	262	NO	SP	A-B-1	OFF	L	+1	L	NON	NON	OFF	OFF	OFF	H	ROM	R6	REA	NON	J2-3
J2-3	214	NO	SP	BL	OFF	H	BRG	H	NON	NON	ON	OFF	OFF	H	ROM	R6	WRI	0	J2-4
J2-4	206	NO	SP	AL	OFF	H	BRG	H	ENO	NON	OFF	OFF	OFF	H	IRS	RØ	REA	NON	J2-5
J2-5	216	NO	SP	AL	OFF	H	BRG	L	NON	NON	OFF	OFF	OFF	H	ROM	R7	REA	NON	J2-6
J2-6	263	NO	SP	BL	OFF	H	BRG	H	NON	NON	OFF	OFF	OFF	H	IRS	RØ	WRI	NON	J2-7
J2-7	264	NO	SP	AL	OFF	H	BRG	L	NON	NON	OFF	OFF	OFF	H	ROM	R11	REA	NON	J2-8
J2-8	265	NO	SP	BL	OFF	H	BRG	H	SRV	NON	OFF	OFF	OFF	H	ROM	R7	WRI	NON	BG-1
LC-1	042	NO	NUL	AL	OFF	H	BRG	L	CON	100	OFF	OFF	OFF	H	ROM	RØ	WRI	NON	ET-2
MB-0	154	NO	SP	AL	OFF	H	BRG	H	NON	NON	ON	OFF	OFF	H	ROM	RØ	REA	NON	MB-1
MB-1	240	NO	SP	ABAR	ON	H	BRG	L	NON	NON	OFF	ON	OFF	H	ROM	R10	REA	NON	MB-2

NAME	LOC	ABT	ALG	ALU	AUX	BAR	BLG	BRG	BUT	CON	CKO	CRI	FSH	PSW	SAM	SPA	SPF	TNS	NXT
MB-2	152	NO	SP	BL	OFF	H	SEX	H	SRV	NON	OFF	OFF	OFF	H	IRD	R4	WRI	NON	BG-1
PF-1	043	NO	NUL	AL	OFF	H	BRG	L	CON	24	OFF	OFF	OFF	H	ROM	RØ	WRI	NON	ET-2
R1-1	005	NO	SP	AL	OFF	L	BRG	H	NON	NON	OFF	OFF	OFF	H	ROM	R6	REA	I	R1-2
R1-2	221	NO	SP	A+B	OFF	H	+1	L	NON	NON	OFF	ON	OFF	H	ROM	R6	REA	NON	R1-3
R1-3	222	NO	SP	BL	OFF	H	BRG	H	NON	NON	OFF	OFF	OFF	H	ROM	R6	WRI	NON	R1-4
R1-4	223	NO	SP	AL	OFF	H	BRG	L	NON	NON	OFF	OFF	OFF	H	IRD	RØ	REA	NON	R1-5
R1-5	224	NO	SP	BL	OFF	H	BRG	H	NON	NON	ON	OFF	OFF	H	ROM	R7	WRI	NON	R1-6
R1-6	225	NO	NUL	AL	OFF	H	BRG	L	NON	NON	OFF	OFF	OFF	H	BAR	RØ	REA	NON	D0-4
R2-1	227	NO	SP	AL	OFF	L	BRG	H	NON	NON	OFF	OFF	OFF	H	ROM	R6	REA	I	R2-2
R2-2	230	NO	SP	A+B	OFF	H	+1	L	NON	NON	OFF	ON	OFF	H	ROM	R6	REA	NON	R2-3
R2-3	231	NO	SP	BL	OFF	H	BRG	H	NON	NON	ON	OFF	OFF	H	ROM	R6	WRI	NON	R2-4
R2-4	232	NO	SP	AL	OFF	H	BRG	H	NON	NON	OFF	OFF	OFF	H	ROM	R7	WRI	NON	R2-6
R2-6	234	NO	SP	AL	OFF	L	BRG	H	NON	NON	OFF	OFF	OFF	H	ROM	R6	REA	I	R2-7
R2-7	235	NO	SP	A+B	OFF	H	+1	L	NON	NON	OFF	ON	OFF	H	ROM	R6	REA	NON	R2-8
R2-8	236	NO	SP	BL	OFF	H	BRG	H	NON	NON	ON	OFF	OFF	H	ROM	R6	WRI	NON	R2-9
R2-9	237	NO	NUL	AL	OFF	H	BRG	H	NON	NON	OFF	OFF	OFF	L	ROM	RØ	REA	NON	B2-2
RS-1	000	NO	NUL	AL	OFF	L	BRG	H	CON	24	OFF	OFF	OFF	H	ROM	RØ	WRI	I	RS-1A
RS-1A	241	NO	SP	AL	OFF	H	BRG	H	NON	NON	ON	OFF	OFF	H	ROM	RØ	REA	NON	RS-2
RS-2	347	NO	SP	AL	OFF	H	BRG	H	NON	NON	OFF	OFF	OFF	H	ROM	R7	WRI	NON	RS-3
RS-3	074	NO	NUL	A+B	OFF	L	+1	H	CON	24	ON	ON	OFF	H	ROM	RØ	WRI	I	RS-4
RS-4	351	NO	SP	AL	OFF	H	BRG	H	NON	NON	OFF	OFF	OFF	L	ROM	RØ	REA	NON	B2-2
RST-1	357	NO	SP	AL	OFF	H	BRG	H	INI	NON	ON	OFF	OFF	H	ROM	RØ	REA	NON	B2-2
RT-1	001	NO	NUL	AL	OFF	H	BRG	L	CON	10	OFF	OFF	OFF	H	ROM	RØ	WRI	NON	ET-2
S0-1	201	NO	SP	AL	OFF	H	BRG	L	BYT	NON	OFF	OFF	OFF	H	IRS	RØ	REA	NON	S0-2
S0-2	007	NO	SP	BL	OFF	H	BRG	H	DST	NON	OFF	OFF	OFF	H	ROM	R10	WRI	NON	RT-1
S1-1	203	YES	SP	AL	OFF	L	BRG	H	NON	NON	ON	OFF	OFF	H	IRS	RØ	REA	I	S1-2
S1-2	244	NO	NUL	AL	OFF	H	BRG	L	BYT	NON	OFF	OFF	OFF	H	BAR	RØ	REA	NON	S0-2
S2-1	205	YES	SP	AL	OFF	L	BRG	H	NON	NON	OFF	OFF	OFF	H	IRS	RØ	REA	I	S2-2
S2-2	301	NO	SP	A+B	OFF	H	+1	L	NON	NON	OFF	ON	OFF	H	IRS	RØ	REA	NON	S2-3
S2-3	014	NO	SP	BL	OFF	H	BRG	H	NON	NON	ON	OFF	OFF	H	IRS	RØ	WRI	NON	S1-2
S3-1	207	NO	SP	AL	OFF	L	BRG	H	NON	NON	OFF	OFF	OFF	H	IRS	RØ	REA	I	S3-2
S3-2	016	NO	SP	A+B	OFF	H	+1	L	NON	NON	OFF	ON	OFF	H	IRS	RØ	REA	NON	S3-3
S3-3	017	NO	SP	BL	OFF	H	BRG	H	NON	NON	ON	OFF	OFF	H	IRS	RØ	WRI	NON	S3-4
S3-4	134	NO	NUL	AL	OFF	H	BRG	L	NON	NON	OFF	OFF	OFF	H	BAR	RØ	REA	NON	S3-5
S3-5	274	YES	SP	BL	OFF	L	BRG	H	NON	NON	ON	OFF	OFF	H	ROM	RØ	REA	I	S1-2
S4-1	211	YES	SP	A-B-1	OFF	L	+1	L	ENO	NON	OFF	OFF	OFF	H	IRS	RØ	REA	I	S2-3
S5-1	213	NO	SP	A-B-1	OFF	L	+1	L	NON	NON	OFF	OFF	OFF	H	IRS	RØ	REA	I	S3-3
S6-1	215	NO	SP	AL	OFF	L	BRG	H	NON	NON	OFF	OFF	OFF	H	ROM	R7	REA	I	S6-2
S6-2	025	NO	SP	A+B	OFF	H	+1	L	NON	NON	OFF	ON	OFF	H	ROM	R7	REA	NON	S6-3
S6-3	026	NO	SP	BL	OFF	H	BRG	H	NON	NON	ON	OFF	OFF	H	ROM	R7	WRI	NON	S6-4
S6-4	027	NO	NUL	AL	OFF	H	BRG	L	NON	NON	OFF	OFF	OFF	H	BAR	RØ	REA	NON	S6-5
S6-5	030	YES	SP	A+B	OFF	L	BRG	H	NON	NON	ON	OFF	OFF	H	IRS	RØ	REA	I	S1-2
S7-1	217	NO	SP	AL	OFF	L	BRG	H	NON	NON	OFF	OFF	OFF	H	ROM	R7	REA	I	S7-2
S7-2	032	NO	SP	A+B	OFF	H	+1	L	NON	NON	OFF	ON	OFF	H	ROM	R7	REA	NON	S7-3

NAME	LOC	AUT	ALG	ALU	AUX	BAR	BLG	BRG	BUT	CON	CKO	CRI	FSH	PSW	SAM	SPA	SPF	TNS	NXT
S7=3	033	NO	SP	BL	OFF	H	BRG	H	NON	NON	ON	OFF	OFF	H	ROM	R7	WRI	NON	S7=4
S7=4	034	NO	NUL	AL	OFF	H	BRG	L	NON	NON	OFF	OFF	OFF	H	BAR	RØ	REA	NON	S7=5
S7=5	035	NO	SP	A+B	OFF	L	BRG	H	NON	NON	ON	OFF	OFF	H	IRS	RØ	REA	!	S3=4
SB1=1	166	NO	SP	ASR	OFF	H	BRG	SL	NON	NON	OFF	OFF	ON	H	ROM	RØ	REA	NON	SB1=2
SB1=2	172	NO	SP	ASR	OFF	H	BRG	SL	NON	NON	OFF	OFF	ON	H	ROM	RØ	REA	NON	SB1=3
SB1=3	173	NO	SP	ASR	OFF	H	BRG	SL	NON	NON	OFF	OFF	ON	H	ROM	RØ	REA	NON	SB1=4
SB1=4	174	NO	SP	ASR	OFF	H	BRG	SL	NON	NON	OFF	OFF	ON	H	ROM	RØ	REA	NON	SB1=5
SB1=5	144	NO	SP	ASR	OFF	H	BRG	SL	NON	NON	OFF	OFF	ON	H	ROM	RØ	REA	NON	SB1=6
SB1=6	176	NO	SP	ASR	OFF	H	BRG	SL	NON	NON	OFF	OFF	ON	H	ROM	RØ	REA	NON	SB1=7
SB1=7	177	NO	SP	ASR	OFF	H	BRG	SL	NON	NON	OFF	OFF	ON	H	ROM	RØ	REA	NON	SB1=8
SB1=8	006	NO	SP	ASR	OFF	H	BRG	SL	NON	NON	OFF	OFF	OFF	H	ROM	RØ	REA	NON	DØ=3A
SB2=1	167	NO	SP	ASR	OFF	H	BRG	SL	NON	NON	OFF	OFF	ON	H	ROM	RØ	REA	NON	SB2=2
SB2=2	012	NO	SP	ASR	OFF	H	BRG	SL	NON	NON	OFF	OFF	ON	H	ROM	RØ	REA	NON	SB2=3
SB2=3	220	NO	SP	ASR	OFF	H	BRG	SL	NON	NON	OFF	OFF	ON	H	ROM	RØ	REA	NON	SB2=4
SB2=4	022	NO	SP	ASR	OFF	H	BRG	SL	NON	NON	OFF	OFF	ON	H	ROM	RØ	REA	NON	SB2=5
SB2=5	023	NO	SP	ASR	OFF	H	BRG	SL	NON	NON	OFF	OFF	ON	H	ROM	RØ	REA	NON	SB2=6
SB2=6	024	NO	SP	ASR	OFF	H	BRG	SL	NON	NON	OFF	OFF	ON	H	ROM	RØ	REA	NON	SB2=7
SB2=7	031	NO	SP	ASR	OFF	H	BRG	SL	NON	NON	OFF	OFF	ON	H	ROM	RØ	REA	NON	SB2=8
SB2=8	330	NO	SP	ASR	OFF	H	BRG	SL	NON	NON	OFF	OFF	OFF	H	ROM	RØ	REA	NON	D1=4
SBE=1	047	NO	SP	BL	OFF	H	SEX	H	DST	NON	OFF	OFF	OFF	H	ROM	R10	WRI	NON	RT=1
SB0=1	067	NO	SP	AL	OFF	H	BRG	SR	NON	NON	OFF	OFF	ON	H	ROM	RØ	REA	NON	SB0=2
SB0=2	346	NO	SP	AL	OFF	H	BRG	SR	NON	NON	OFF	OFF	ON	H	ROM	RØ	REA	NON	SB0=3
SB0=3	324	NO	SP	AL	OFF	H	BRG	SR	NON	NON	OFF	OFF	ON	H	ROM	RØ	REA	NON	SB0=4
SB0=4	340	NO	SP	AL	OFF	H	BRG	SR	NON	NON	OFF	OFF	ON	H	ROM	RØ	REA	NON	SB0=5
SB0=5	361	NO	SP	AL	OFF	H	BRG	SR	NON	NON	OFF	OFF	ON	H	ROM	RØ	REA	NON	SB0=6
SB0=6	050	NO	SP	AL	OFF	H	BRG	SR	NON	NON	OFF	OFF	ON	H	ROM	RØ	REA	NON	SB0=7
SB0=7	020	NO	SP	AL	OFF	H	BRG	SR	NON	NON	OFF	OFF	ON	H	ROM	RØ	REA	NON	SB0=8
SB0=8	052	NO	SP	AL	OFF	H	BRG	SR	NON	NON	OFF	OFF	OFF	H	ROM	RØ	REA	NON	SBE=1
SC=1	116	NO	PSW	AORB	OFF	H	BRG	H	SRV	NON	OFF	OFF	OFF	L	ROM	RØ	REA	NON	BG=1
T=1	021	NO	NUL	AL	OFF	H	BRG	L	CON	34	OFF	OFF	OFF	H	ROM	RØ	WRI	NON	ET=2
U1=1	352	NO	SP	BL	OFF	H	BRG	H	NON	NON	ON	OFF	OFF	H	ROM	R10	WRI	NON	DØ=3
U2=1	353	NO	SP	BL	OFF	H	BRG	H	NON	NON	ON	OFF	OFF	H	ROM	R10	WRI	NON	D1=4
U3=1	354	NO	SP	BL	OFF	H	BRG	H	NON	NON	ON	OFF	OFF	H	ROM	R10	WRI	NON	DBØ=2
U4=1	355	NO	SP	BL	OFF	H	BRG	H	NON	NON	ON	OFF	OFF	H	ROM	R10	WRI	NON	DQ=10
U5=1	373	NO	SP	BL	OFF	H	BRG	H	NON	NON	ON	OFF	OFF	H	ROM	R10	WRI	NON	D1=4
URTR	064	NO	NUL	AL	OFF	H	BRG	L	CON	60	OFF	OFF	OFF	H	ROM	RØ	WRI	NON	ET=2
URTX	060	NO	NUL	AL	OFF	H	BRG	L	CON	64	OFF	OFF	OFF	H	ROM	RØ	WRI	NON	ET=2
W=1	063	NO	SP	AL	OFF	H	BRG	H	SRV	NON	OFF	OFF	OFF	H	ROM	RØ	REA	NON	BG=1

PAGE REVISION CONTROL SHEET

SH NO.	PAGE REVISIONS	REMARKS
1	A B C	
2	A A A	
3	A B B	
4	A A B	
5	A A A	
6	A A A	
7	A A A	

	ECO NO.	ETCH REV.	ENG.	DATE
	00002		BA	8-21-72
	KD11B 00003		MT	9-24-72
	KD11B 00004		MT	10-30-72

FIRST USED ON OPTION/MODEL

KD11-B

DRN. M. Towe	DATE 8-21-72	digital EQUIPMENT CORPORATION MAYNARD, MASSACHUSETTS
CHK'D. S McCullough	DATE 8-21-72	
ENG. B. ARMSTRONG	DATE 8-29-72	TITLE MICROPROGRAM BINARY LISTING
PROJ. ENG. B. ARMSTRONG	DATE 8-29-72	
PROD.	DATE	

"THIS DRAWING AND SPECIFICATIONS, HEREIN, ARE THE PROPERTY OF DIGITAL EQUIPMENT CORPORATION AND SHALL NOT BE REPRODUCED OR COPIED OR USED IN WHOLE OR IN PART AS THE BASIS FOR THE MANUFACTURE OR SALE OF ITEMS WITHOUT WRITTEN PERMISSION.
COPYRIGHT © 1972 DIGITAL EQUIPMENT CORPORATION"

NEXT HIGHER ASSY. B-DD-KD11-B

SCALE ++

SHEET 1 OF 7

SIZE	CODE	NUMBER	REV.
K	MP	KD11-B-3	C

DIST.

NAM	LOC	NXT	ALU	CRI	FSH	AUX	PSW	SP1	SP3	DIP	SM0	SP0	SM1	BBT	BAR	BTP	SPF	SP2	CK0	CBT	TNS	AL6	BRG	BUT
A145	145	0000	0000	0000	0	0	1	0	0	0	0	0	0	0	1	0	1	0	0	0	0	00	00	00	0101
B=1	015	1001	1000	1100	0	0	1	1	1	0	0	1	1	0	1	1	1	1	0	1	1	11	11	01	1111
B=2	147	1001	1001	0110	0	0	1	1	1	1	0	1	1	1	1	1	1	1	1	1	1	11	11	11	1111
B=3	146	1101	1111	0101	1	0	1	1	1	1	0	1	1	1	1	1	1	0	1	1	1	11	11	00	1100
B2=2	305	1101	1111	0000	1	0	1	1	1	0	0	1	1	0	1	1	1	1	0	1	1	11	11	00	1100
B2=2A	333	1101	1111	0000	1	0	1	1	1	0	0	1	1	0	1	1	1	1	0	1	1	11	11	00	1100
B2=2B	335	1101	1111	0000	1	0	1	1	1	0	0	1	1	0	1	1	1	1	0	1	1	11	11	00	1100
B2=2C	343	1101	1111	0000	1	0	1	1	1	0	0	1	1	0	1	1	1	1	0	1	1	11	11	00	1100
B2=2D	013	1101	1111	0000	1	0	1	1	1	0	0	1	1	0	1	1	1	1	0	1	1	11	11	00	1100
BG=1	040	0011	1010	0000	1	0	1	1	1	0	0	1	1	0	1	1	1	1	0	1	1	11	11	00	0001
BT=1	045	0101	1010	0000	1	0	1	1	1	1	0	1	1	0	1	1	1	1	0	1	1	11	10	11	1101
CC=1	112	1101	1111	0010	1	0	1	1	0	0	0	1	1	0	1	1	1	1	0	1	1	11	00	00	1100
CCM=1	151	0001	0111	0001	1	0	1	1	1	0	0	1	1	1	1	1	1	1	0	0	1	1	11	10	11	1101
CCM=2	350	1011	0101	0000	1	0	1	1	1	0	0	1	1	0	1	1	1	1	0	1	1	11	11	00	1001
CCS=1	316	0100	0001	0000	1	0	1	1	1	1	0	1	1	1	1	1	1	1	1	1	1	11	11	11	1111
CCS=2	276	0100	0111	0000	1	0	1	1	1	0	0	1	1	0	1	1	1	1	0	1	1	11	11	00	0110
CCS=3	272	1100	1101	0011	1	0	1	1	1	0	0	1	1	0	1	1	1	1	0	1	1	11	11	00	0000
CD1=1	313	0011	1100	0000	1	0	1	1	1	1	1	1	1	1	1	1	1	1	1	1	1	11	11	11	0110
CD1=2	303	0000	0011	1111	1	0	1	1	1	0	0	1	1	0	1	1	0	1	0	0	1	10	10	00	1101
CD1=3	374	0011	0011	0000	1	0	1	1	1	0	0	1	0	0	0	1	1	1	1	0	1	1	10	11	1111
CD1=4	314	0000	0101	0000	1	0	1	1	1	1	1	1	1	1	1	1	0	1	1	1	0	1	11	00	1111
CD1=5	372	0011	1101	0101	1	0	1	1	1	0	0	1	0	0	0	1	1	1	1	0	1	1	11	00	1111
CD2=1	312	0010	0000	0110	0	1	1	1	1	1	1	1	1	1	1	0	1	1	1	1	1	11	11	11	1111
CD2=2	337	0011	0100	0101	1	0	1	1	1	1	1	1	1	1	1	1	1	1	0	1	1	11	11	00	1111
CE1=1	317	0011	1000	0000	1	0	1	1	1	1	1	1	1	1	1	1	0	1	1	1	1	11	11	11	0110
CE1=2	307	0010	1001	0000	1	0	1	1	1	0	0	1	1	0	1	1	1	1	0	0	1	10	11	00	1111
CE1=3	326	0011	1101	0000	1	0	1	1	1	0	0	1	0	0	0	1	1	1	1	0	1	1	11	11	1111
CE2=1	315	0000	0110	0110	0	1	1	1	1	1	1	1	1	1	1	0	0	1	1	1	1	1	11	11	1111
CE2=2	371	0011	0000	0101	1	0	1	1	1	1	1	1	1	1	1	1	1	1	0	1	1	1	11	00	1111
CL=1	311	0000	0010	1111	1	0	1	1	1	0	0	1	1	0	1	1	0	1	0	0	1	10	10	00	1101
CL=2	375	0000	1000	0000	1	0	1	1	1	0	0	1	0	0	0	1	1	1	1	0	1	1	10	11	1111
CL=3	367	0011	1101	0101	1	0	1	1	1	1	1	1	1	1	1	1	1	1	0	1	1	1	11	00	1111
CS=1	100	0010	1101	0011	1	0	1	1	1	0	0	1	1	0	1	1	1	1	1	0	1	1	11	00	0000
CS=2	322	0010	1110	0000	1	0	1	1	1	1	1	1	1	1	1	1	0	1	1	1	1	1	11	11	1111
CS=3	321	1101	1111	0101	1	0	1	1	1	1	0	1	1	1	1	1	1	1	0	1	1	1	11	00	1100
D0=1	101	1001	0011	0000	1	0	1	1	1	0	0	1	0	0	1	1	1	1	1	0	1	1	11	11	0101
D0=2	157	1001	1101	0101	1	0	1	1	1	0	1	1	1	1	1	1	1	1	0	0	1	1	11	00	1010
D0=3	162	0010	0101	1111	1	1	1	0	1	0	1	1	1	0	1	1	1	1	0	1	1	1	11	11	0010
D0=3A	155	0010	0101	1111	1	1	1	0	1	0	1	1	1	0	1	1	1	1	0	1	1	1	11	11	0010
D0=4	332	1101	1111	0101	1	0	1	1	1	0	0	1	0	0	1	1	1	1	0	0	1	1	11	00	1100

NAM	LOC	NXT	ALU	CRI	FSH	AUX	PSW	SP1	SP3	DIP	SM0	SP0	SM1	BBT	BAR	BTP	SPF	SP2	CK0	CBT	TNS	AL6	BRG	BUT
D1-1	103	0111	1111	0000	1	0	1	1	1	0	0	0	1	1	0	1	1	0	0	0	10	11	11	1011
D1-2	200	0111	0111	0000	1	0	1	1	1	0	0	1	0	1	1	1	1	0	1	1	11	10	11	0011
D1-3	210	1001	1100	0101	1	0	1	1	1	0	1	1	1	1	1	1	0	0	1	1	11	11	00	1010
D1-4	163	0010	0011	1111	1	1	1	0	1	0	1	1	1	0	1	1	1	1	0	1	1	11	11	0010
D1-5	334	1100	1010	0000	1	0	1	1	1	0	0	1	1	0	1	1	1	1	0	0	0	1	11	00	1111
D1-6	065	0011	1010	0101	1	0	1	1	1	0	0	1	1	0	1	1	1	1	0	1	1	11	11	00	1111
D2-1	105	0010	0110	0000	1	0	1	1	1	0	0	0	1	1	0	1	1	1	0	1	0	10	11	00	1111
D2-2	331	0001	1110	0110	0	1	1	1	1	0	0	1	0	0	1	0	1	1	1	0	1	11	11	11	1111
D2-3	341	0111	1111	0101	1	0	1	1	1	0	0	1	0	0	1	1	1	1	0	0	0	1	11	00	1011
D3-1	107	1000	1111	0000	1	0	1	1	1	0	0	1	0	0	1	1	0	1	1	0	1	1	10	11	00	1111
D3-2	160	1100	0111	0110	0	1	1	1	1	0	0	1	0	0	1	0	1	1	1	0	1	1	11	11	11	1111
D3-3	070	1100	0110	0101	1	0	1	1	1	0	0	1	0	0	1	1	1	1	0	0	0	1	11	11	00	1111
D3-4	071	1100	0101	0000	1	0	1	1	1	0	0	1	0	0	0	1	1	1	1	0	1	1	11	10	11	1111
D3-5	072	0111	1111	0101	1	0	1	1	1	0	0	0	1	0	1	1	0	1	1	0	0	0	10	11	00	1011
D4-1	111	0001	1110	1001	0	0	1	1	1	0	0	0	0	0	1	0	0	1	1	0	1	0	10	11	11	0100
D5-1	113	1100	0111	1001	0	0	1	1	1	0	0	1	0	0	1	0	0	1	1	0	1	1	10	11	11	0100
D6-1	115	1100	0010	0000	1	0	1	1	1	1	0	1	1	1	1	1	0	1	1	1	1	1	10	11	00	1111
D6-2	075	1100	0000	0110	0	1	1	1	1	1	0	1	1	1	1	0	1	1	1	1	1	1	11	11	11	1111
D6-3	077	1101	0000	0101	1	0	1	1	1	1	0	1	1	1	1	1	1	1	0	1	1	0	1	11	00	1111
D6-4	057	0011	1111	0000	1	0	1	1	1	0	0	1	0	0	0	1	1	1	1	0	1	1	11	10	11	1111
D6-5	300	0111	1111	0110	0	0	1	1	1	0	0	0	1	1	0	1	1	1	0	0	0	1	10	11	11	1011
D7-1	117	0011	0111	0000	1	0	1	1	1	1	0	1	1	1	1	1	0	1	1	1	1	1	10	11	00	1111
D7-2	310	1011	1011	0110	0	1	1	1	1	0	1	1	1	1	1	1	1	1	1	1	1	1	11	11	11	1111
D7-3	104	0010	1111	0101	1	0	1	1	1	1	0	1	1	1	1	1	1	1	0	1	0	1	11	11	00	1111
D7-4	320	1011	1001	0000	1	0	1	1	1	0	0	1	0	0	0	1	1	1	1	0	1	1	11	10	11	1111
D7-5	106	1100	0110	0110	0	0	1	1	1	0	0	1	0	0	1	1	0	1	1	0	0	1	10	11	00	1111
DB0-1	156	1001	1011	0101	1	0	1	1	1	0	1	1	1	1	1	1	1	0	0	0	1	1	11	11	11	1010
DB0-2	164	0011	1011	1111	1	1	1	0	1	0	1	1	1	0	1	1	1	1	0	1	1	1	11	11	11	0010
DB0-3	304	1101	1111	0101	1	0	1	1	1	0	0	1	0	0	1	1	1	1	0	0	1	1	11	01	00	1100
DBE-1	110	1101	1110	0000	1	0	1	1	1	0	0	1	1	0	1	1	1	1	1	0	1	1	11	11	00	1111
DE-1	250	1000	1100	0101	1	0	1	1	1	0	1	1	1	1	1	1	1	0	0	0	1	1	11	11	11	1010
DD-1	270	1010	1100	0000	1	0	0	1	1	0	0	1	1	0	1	1	1	1	1	0	1	1	11	11	10	1111
DD-10	165	0001	1101	1111	1	1	1	0	1	0	1	1	1	0	1	1	1	1	0	1	1	1	11	11	11	0010
DD-11	342	1010	0010	0000	1	0	0	1	1	0	0	1	1	0	1	1	1	1	0	1	1	1	11	11	01	1111
DD-12	135	1010	0001	0000	1	0	0	1	1	0	0	1	1	0	1	1	1	1	0	1	1	1	11	11	01	1111
DD-13	136	1010	0000	0000	1	0	0	1	1	0	0	1	1	0	1	1	1	1	0	1	1	1	11	11	01	1111
DD-14	137	1001	1111	0000	1	0	0	1	1	0	0	1	1	0	1	1	1	1	0	1	1	1	11	11	01	1111
DD-15	140	1001	1110	0000	1	0	0	1	1	0	0	1	1	0	1	1	1	1	0	1	1	1	11	11	01	1111
DD-16	141	1001	1101	0000	1	0	0	1	1	0	0	1	1	0	1	1	1	1	0	1	1	1	11	11	01	1111
DD-17	142	1001	1100	0000	1	0	0	1	1	0	0	1	1	0	1	1	1	1	0	1	1	1	11	11	01	1111

NAM	LOC	NXT	ALU	CRI	FSH	AUX	PSW	PSP1	PSP3	DIP	SMØ	SPØ	SM1	BBT	BAR	BTP	SPF	SP2	CKO	ABT	TNS	ALG	BRG	BUT
DO-18	143	1100 1010	0000	1	0	1	1	0	0	1	1	0	1	1	1	1	1	0	0	0	01	11	01	1111
DO-2	123	1010 1011	0000	1	0	0	1	0	0	1	1	0	1	1	1	1	1	0	1	1	11	11	10	1111
DO-3	124	1010 1010	0000	1	0	0	1	0	0	1	1	0	1	1	1	1	1	0	1	1	11	11	10	1111
DO-4	125	1010 1001	0000	1	0	0	1	0	0	1	1	0	1	1	1	1	1	0	1	1	11	11	10	1111
DO-5	126	1010 1000	0000	1	0	0	1	0	0	1	1	0	1	1	1	1	1	0	1	1	11	11	10	1111
DO-6	127	1010 0111	0000	1	0	0	1	0	0	1	1	0	1	1	1	1	1	0	1	1	11	11	10	1111
DO-7	130	1010 0110	0000	1	0	0	1	0	0	1	1	0	1	1	1	1	1	0	1	1	11	11	10	1111
DO-8	131	1010 0101	0000	1	0	1	1	0	0	1	1	0	1	1	1	1	1	0	1	1	11	11	10	1111
DO-9	132	1001 1010	0101	1	0	1	1	0	1	1	1	1	1	1	1	0	0	0	1	1	11	11	11	1010
ERT-1	013	0101 1010	0000	1	0	1	1	1	0	1	1	0	1	1	1	1	0	1	1	1	11	10	11	1101
ERT1A	046	1111 1100	0000	1	0	1	1	1	0	1	1	0	1	1	1	1	0	1	1	1	11	10	11	1101
ERT1B	153	0101 1010	0000	1	0	1	1	1	0	1	1	0	1	1	1	1	0	1	1	1	11	10	11	1101
ET-1	211	0101 1010	0000	1	0	1	1	1	1	0	1	1	0	1	1	1	1	0	1	1	11	10	11	1101
ET-10	254	0101 0010	0000	1	0	1	1	1	1	1	1	0	1	1	0	1	1	0	0	1	10	11	00	0000
ET-11	255	0101 0001	0000	1	0	1	1	1	1	0	1	1	1	1	1	1	1	0	1	1	11	11	11	1111
ET-12	256	0101 0000	0110	0	1	1	1	1	1	1	1	0	1	0	0	1	1	0	0	1	10	11	11	1111
ET-13	257	0011 1010	0000	1	0	1	1	0	0	0	1	1	0	1	1	1	1	1	0	1	1	11	11	1111
ET-2	245	0101 1001	0101	1	0	1	1	1	1	1	1	1	0	1	1	1	1	0	0	1	1	11	00	1111
ET-3	246	0101 1000	1001	0	0	1	1	1	1	0	1	1	0	1	0	0	1	1	1	1	11	11	11	0100
ET-5	247	0110 1001	0101	1	0	1	1	1	1	0	1	1	0	1	1	1	1	0	1	0	1	11	00	1111
ET-6	226	0101 0110	0000	1	0	1	1	1	0	0	1	1	0	1	1	1	1	1	0	1	1	11	00	1111
ET-7	251	0101 0101	1001	0	0	1	1	1	1	0	1	1	0	1	0	0	1	1	1	1	1	11	11	0100
ET-8	252	0101 0100	0101	1	0	1	1	1	1	0	1	1	0	1	1	1	1	0	1	0	1	11	00	1111
ET-9	253	0101 0011	0000	1	0	1	1	1	1	0	1	1	1	1	1	1	1	1	1	1	11	11	00	1111
ET2-2	003	1111 1011	0101	1	0	1	1	1	1	1	1	1	0	1	1	1	1	0	0	1	1	11	11	1111
ET2-3	004	1110 0001	1001	0	0	1	1	1	1	0	1	1	0	1	0	0	1	1	1	1	1	11	11	1111
ET2-5	036	1110 0000	0101	1	0	1	1	1	1	0	1	1	0	1	1	1	1	0	1	0	1	11	00	1111
ET2-6	037	1101 0110	0000	1	0	1	1	1	0	0	1	1	0	1	1	1	1	1	0	1	1	11	00	1111
ET2-7	251	0101 0101	1001	0	0	1	1	1	1	0	1	1	0	1	0	0	1	1	1	1	1	11	11	1111
F-1	062	1101 0100	0000	1	0	1	1	1	1	0	1	1	1	1	1	0	1	1	1	1	10	11	00	1111
F-2	053	0000 1010	0110	0	1	1	1	1	1	0	1	1	1	1	0	1	1	1	1	1	11	11	11	1111
F-3	365	0000 1011	0101	1	0	1	1	1	1	0	1	1	1	1	1	1	1	0	1	0	1	11	00	1111
F-4	364	1100 1110	0000	1	0	1	1	1	0	0	1	0	0	0	1	1	1	1	0	1	1	11	10	11	0000
F-5	361	1111 1110	0101	1	0	1	1	1	0	0	1	1	0	1	1	1	0	1	0	1	1	11	11	11	0111
H-1	241	0011 1101	0000	1	0	1	1	1	1	0	1	1	1	1	1	1	1	1	1	1	1	11	11	11	1111
H-2	302	0011 1111	0000	1	0	1	1	1	1	1	1	1	1	1	1	0	1	1	1	1	1	11	00	11	0110
INT-1	325	0101 1001	0000	1	0	1	1	1	1	1	1	0	1	1	1	1	1	0	0	1	1	11	00	11	1000
IT-1	273	0101 1010	0000	1	0	1	1	1	0	0	1	1	0	1	1	1	1	1	1	1	1	11	10	11	1101
J1-1	204	0100 1111	0000	1	0	1	1	1	0	0	1	1	0	1	1	1	1	1	0	1	1	11	11	00	1111
J1-2	260	1101 1111	0101	1	0	1	1	1	1	0	1	1	1	1	1	1	1	0	1	1	1	11	11	00	1100

NAM	LOC	NXT	ALU	CRI	FSH	AUX	PSW	PSP1	PSP3	DIP	SMØ	SPØ	SM1	BBT	BAR	BTP	SPF	SP2	CKO	ABT	TNS	ALG	BRG	BUT
J2*1	212	0100 1110	0000	1	0	1	1	0	0	1	1	0	1	1	1	1	1	0	1	1	11	11	00	1111
J2*1A	261	0100 1101	0101	1	0	1	1	1	0	1	1	1	1	1	1	1	0	0	1	1	11	11	00	1111
J2*2	262	0111 0011	1001	0	0	1	1	1	1	0	1	1	0	1	0	0	1	1	1	1	11	11	11	1111
J2*3	214	0111 1001	0101	1	0	1	1	1	1	0	1	1	0	1	1	1	1	0	1	0	1	11	00	1111
J2*4	206	0111 0001	0000	1	0	1	1	1	0	0	1	1	0	0	1	1	1	1	0	1	1	11	00	0100
J2*5	216	0100 1100	0000	1	0	1	1	1	1	0	1	1	1	1	1	1	1	1	1	1	1	11	11	1111
J2*6	263	0100 1011	0101	1	0	1	1	1	0	0	1	1	0	0	1	1	1	0	0	1	1	11	00	1111
J2*7	264	0100 1010	0000	1	0	1	1	1	0	1	1	1	1	1	1	1	1	1	0	1	1	11	11	1111
J2*8	265	1101 1111	0101	1	0	1	1	1	1	0	1	1	1	1	1	1	0	1	1	1	1	11	00	1100
LC*1	042	0101 1010	0000	1	0	1	1	1	0	1	1	1	1	1	1	1	1	0	1	1	1	10	11	1101
MB*0	154	0101 1111	0000	1	0	1	1	1	0	0	1	1	0	1	1	1	1	0	0	1	1	11	00	1111
MB*1	240	1001 0101	1111	1	1	1	0	1	0	1	1	1	0	1	1	1	1	0	1	1	1	11	11	1111
MB*2	152	1101 1111	0101	1	0	1	1	1	0	0	1	0	0	1	1	1	0	0	0	1	1	11	00	1100
PF*1	043	0101 1010	0000	1	0	1	1	1	0	1	1	1	0	1	1	1	1	0	1	1	1	11	10	11	1101
R1*1	005	0110 1110	0000	1	0	1	1	1	1	0	1	1	0	1	1	0	1	1	1	1	10	11	00	1111
R1*2	221	0110 1101	0110	0	1	1	1	1	1	0	1	1	0	1	0	1	1	1	1	1	1	11	11	1111
R1*3	222	0110 1100	0101	1	0	1	1	1	1	0	1	1	0	1	1	1	1	0	1	1	1	11	00	1111
R1*4	223	0110 1011	0000	1	0	1	1	1	0	0	1	0	0	1	1	1	1	1	0	1	1	11	11	1111
R1*5	224	0110 1010	0101	1	0	1	1	1	1	0	1	1	1	1	1	1	0	1	0	1	1	11	00	1111
R1*6	225	0010 0101	0000	1	0	1	1	1	0	0	1	0	0	0	1	1	1	1	0	1	1	11	10	11	1111
R2*1	227	0110 0111	0000	1	0	1	1	1	1	0	1	1	0	1	1	0	1	1	1	1	1	10	11	00	1111
R2*2	230	0110 0110	0110	0	1	1	1	1	1	0	1	1	0	1	0	1	1	1	1	1	1	11	11	11	1111
R2*3	231	0110 0101	0101	1	0	1	1	1	1	0	1	1	0	1	1	1	1	0	1	0	1	11	00	11	1111
R2*4	232	0110 0011	0000	1	0	1	1	1	1	0	1	1	1	1	1	1	1	0	1	1	1	11	00	11	1111
R2*6	234	0110 0010	0000	1	0	1	1	1	1	0	1	1	0	1	1	0	1	1	1	1	1	10	11	00	1111
R2*7	235	0110 0001	0110	0	1	1	1	1	1	0	1	1	0	1	0	1	1	1	1	1	1	11	11	11	1111
R2*8	236	0110 0000	0101	1	0	1	1	1	1	0	1	1	0	1	1	1	1	0	1	0	1	11	00	11	1111
R2*9	237	0011 1010	0000	1	0	1	1	0	0	0	1	1	0	1	1	1	1	1	0	1	1	11	10	00	1111
RS*1	000	0101 1110	0000	1	0	1	1	1	0	1	1	1	0	1	1	0	1	1	0	1	1	10	10	00	1101
RS*1A	241	0001 1000	0000	1	0	1	1	1	0	0	1	1	0	1	1	1	1	1	0	0	1	11	11	00	1111
RS*2	347	1100 0011	0000	1	0	1	1	1	1	0	1	1	1	1	1	1	1	0	1	1	1	11	11	00	1111
RS*3	074	0001 0110	0110	0	1	1	1	1	0	1	1	1	0	1	0	0	1	1	0	0	1	10	10	00	1101
RS*4	351	0011 1010	0000	1	0	1	1	0	0	0	1	1	0	1	1	1	1	1	0	1	1	11	11	00	1111
RST*1	357	0011 1010	0000	1	0	1	1	1	0	0	1	1	0	1	1	1	1	1	0	0	1	11	11	00	1110
RT*1	001	0101 1010	0000	1	0	1	1	1	1	0	1	1	0	1	1	1	1	1	1	1	1	11	10	11	1101
S0*1	201	1111 1000	0000	1	0	1	1	1	0	0	1	1	0	0	1	1	1	1	0	1	1	11	11	00	0011
S0*2	007	1111 1110	0101	1	0	1	1	1	0	1	1	1	0	1	1	1	1	0	0	1	1	11	00	1001
S1*1	203	0101 1011	0000	1	0	1	1	1	0	0	1	1	0	0	1	0	1	1	0	0	1	10	11	00	1111
S1*2	244	1111 1000	0000	1	0	1	1	1	0	0	1	0	0	0	1	1	1	1	0	1	1	11	10	11	0011
S2*1	205	0011 1110	0000	1	0	1	1	1	0	0	1	1	0	0	1	0	1	1	0	1	0	10	11	00	1111

NAM	LOC	NXT	ALU	CRI	FSH	AUX	PSW	PP1	SP3	DIP	SMØ	SPØ	SMØ	BT1	BAR	BTP	PF	PP2	CKO	ABT	TNS	ALG	BRG	BUT
S2=2	301	1111	0011	0110	0	1	1	1	1	0	0	1	1	0	0	0	1	1	1	0	1	1	11	11	1111
S2=3	014	0101	1011	0101	1	0	1	1	1	0	0	1	1	0	0	1	1	1	0	0	0	1	11	00	1111
S3=1	207	1111	0001	0000	1	0	1	1	1	0	0	1	1	0	0	1	1	1	1	0	1	1	10	11	00	1111
S3=2	016	1111	0000	0110	0	1	1	1	1	0	0	1	1	0	0	0	1	1	1	0	1	1	11	11	11	1111
S3=3	017	1010	0011	0101	1	0	1	1	1	0	0	1	1	0	0	1	1	1	0	0	0	1	11	11	00	1111
S3=4	134	0100	0011	0000	1	0	1	1	1	0	0	1	0	0	0	1	1	1	1	0	1	1	11	10	11	1111
S3=5	274	0101	1011	0101	1	0	1	1	1	0	0	1	1	0	1	1	0	1	1	0	0	0	10	11	00	1111
S4=1	211	1111	0011	1001	0	0	1	1	1	0	0	1	1	0	0	0	0	1	1	0	1	0	10	11	11	0100
S5=1	213	1111	0000	1001	0	0	1	1	1	0	0	1	1	0	0	0	0	1	1	0	1	1	10	11	11	1111
S6=1	215	1110	1010	0000	1	0	1	1	1	1	0	1	1	1	1	1	0	1	1	1	1	1	10	11	00	1111
S6=2	025	1110	1001	0110	0	1	1	1	1	1	0	1	1	1	1	0	1	1	1	1	1	1	11	11	11	1111
S6=3	026	1110	1000	0101	1	0	1	1	1	1	0	1	1	1	1	1	1	1	0	1	0	1	11	11	00	1111
S6=4	027	1110	0111	0000	1	0	1	1	1	0	0	1	0	0	0	1	1	1	1	0	1	1	11	10	11	1111
S6=5	030	0101	1011	0110	0	0	1	1	1	0	0	1	1	0	0	1	0	1	1	0	0	0	10	11	00	1111
S7=1	217	1110	0101	0000	1	0	1	1	1	1	0	1	1	1	1	1	0	1	1	1	1	1	10	11	00	1111
S7=2	032	1110	0100	0110	0	1	1	1	1	1	0	1	1	1	1	0	1	1	1	1	1	1	11	11	11	1111
S7=3	033	1110	0011	0101	1	0	1	1	1	1	0	1	1	1	1	1	1	1	0	1	0	1	11	11	00	1111
S7=4	034	1110	0010	0000	1	0	1	1	1	0	0	1	0	0	0	1	1	1	1	0	1	1	11	10	11	1111
S7=5	035	1010	0011	0110	0	0	1	1	1	0	0	1	1	0	0	1	0	1	1	0	0	1	10	11	00	1111
SB1=1	166	1000	0101	1110	0	0	0	1	1	0	0	1	1	0	1	1	1	1	1	0	1	1	11	11	01	1111
SB1=2	172	1000	0100	1110	0	0	0	1	1	0	0	1	1	0	1	1	1	1	1	0	1	1	11	11	01	1111
SB1=3	173	1000	0011	1110	0	0	0	1	1	0	0	1	1	0	1	1	1	1	1	0	1	1	11	11	01	1111
SB1=4	174	1001	1011	1110	0	0	0	1	1	0	0	1	1	0	1	1	1	1	1	0	1	1	11	11	01	1111
SB1=5	144	1000	0001	1110	0	0	0	1	1	0	0	1	1	0	1	1	1	1	1	0	1	1	11	11	01	1111
SB1=6	176	1000	0000	1110	0	0	0	1	1	0	0	1	1	0	1	1	1	1	1	0	1	1	11	11	01	1111
SB1=7	177	1111	1001	1110	0	0	0	1	1	0	0	1	1	0	1	1	1	1	1	0	1	1	11	11	01	1111
SB1=8	006	1001	0010	1110	0	0	1	1	1	0	0	1	1	0	1	1	1	1	1	0	1	1	11	11	01	1111
SB2=1	167	1111	0101	1110	0	0	0	1	1	0	0	1	1	0	1	1	1	1	1	0	1	1	11	11	01	1111
SB2=2	012	0110	1111	1110	0	0	0	1	1	0	0	1	1	0	1	1	1	1	1	0	1	1	11	11	01	1111
SB2=3	220	1110	1101	1110	0	0	0	1	1	0	0	1	1	0	1	1	1	1	1	0	1	1	11	11	01	1111
SB2=4	022	1110	1100	1110	0	0	0	1	1	0	0	1	1	0	1	1	1	1	1	0	1	1	11	11	01	1111
SB2=5	023	1110	1011	1110	0	0	0	1	1	0	0	1	1	0	1	1	1	1	1	0	1	1	11	11	01	1111
SB2=6	024	1110	0110	1110	0	0	0	1	1	0	0	1	1	0	1	1	1	1	1	0	1	1	11	11	01	1111
SB2=7	031	0010	0111	1110	0	0	0	1	1	0	0	1	1	0	1	1	1	1	1	0	1	1	11	11	01	1111
SB2=8	330	1000	1100	1110	0	0	1	1	1	0	0	1	1	0	1	1	1	1	1	0	1	1	11	11	01	1111
SBE=1	047	1111	1110	0101	1	0	1	1	1	0	1	1	1	0	1	1	1	0	0	0	1	1	11	11	00	1001
SB0=1	067	0001	1001	0000	1	0	0	1	1	0	0	1	1	0	1	1	1	1	1	0	1	1	11	11	10	1111
SB0=2	346	0010	1011	0000	1	0	0	1	1	0	0	1	1	0	1	1	1	1	1	0	1	1	11	11	10	1111
SB0=3	324	0001	1111	0000	1	0	0	1	1	0	0	1	1	0	1	1	1	1	1	0	1	1	11	11	10	1111
SB0=4	340	0000	1110	0000	1	0	0	1	1	0	0	1	1	0	1	1	1	1	1	0	1	1	11	11	10	1111

NAM	LOC	NXT	ALU	CRI	FSH	AUX	PSW	PP1	SP3	DIP	SMØ	SPØ	SMØ	BT1	BAR	BTP	PF	PP2	CKO	ABT	TNS	ALG	BRG	BUT
SB0=5	361	1101	0111	0000	1	0	0	1	1	0	0	1	1	0	1	1	1	1	0	1	1	11	11	10	1111
SB0=6	050	1110	1111	0000	1	0	0	1	1	0	0	1	1	0	1	1	1	1	0	1	1	11	11	10	1111
SB0=7	020	1101	0101	0000	1	0	0	1	1	0	0	1	1	0	1	1	1	1	0	1	1	11	11	10	1111
SB0=8	052	1101	1000	0000	1	0	1	1	1	0	0	1	1	0	1	1	1	1	0	1	1	11	11	10	1111
SC=1	116	1101	1111	0100	1	0	1	1	0	0	0	1	1	0	1	1	1	1	0	1	1	11	00	00	1100
T=1	021	0101	1010	0000	1	0	1	1	1	0	0	1	1	0	1	1	1	1	0	1	1	11	10	11	1101
U1=1	352	1000	1101	0101	1	0	1	1	1	0	1	1	1	0	1	1	1	1	0	0	0	1	11	11	00	1111
U2=1	353	1100	1100	0101	1	0	1	1	1	0	1	1	1	0	1	1	1	1	0	0	0	1	11	11	00	1111
U3=1	354	1100	1011	0101	1	0	1	1	1	0	1	1	1	0	1	1	1	1	0	0	0	1	11	11	00	1111
U4=1	355	1100	1010	0101	1	0	1	1	1	0	1	1	1	0	1	1	1	1	0	0	0	1	11	11	00	1111
U5=1	373	1100	1100	0101	1	0	1	1	1	0	1	1	1	0	1	1	1	1	0	0	0	1	11	11	00	1111
URTR	064	0101	1010	0000	1	0	1	1	1	1	1	1	1	0	1	1	1	1	0	1	1	1	11	10	11	1101
URTX	060	0101	1010	0000	1	0	1	1	1	0	0	1	1	1	1	1	1	1	0	1	1	1	11	10	11	1101
W=1	063	1101	1111	0000	1	0	1	1	1	0	0	1	1	0	1	1	1	1	0	1	1	1	11	11	00	1100

PAGE REVISION CONTROL SHEET

SH NO.	PAGE REVISIONS	REMARKS
1		
2		
3		

ECO NO.																			
ETCH REV.																			
ENG.																			
DATE																			

FIRST USED ON OPTION/MODEL

KD11-B

DRN.		DATE 4-21-72
CHK'D.	R. L. Kusik	DATE 4-2-72
ENG.	R. L. Kisik	DATE 5-2-72
PROJ. ENG.	R. L. Kusik	DATE 5-2-72
PROD.	R K Stevens	DATE 5-2-72

digital EQUIPMENT CORPORATION
MAYNARD, MASSACHUSETTS

TITLE

MICROPROGRAM CROSS REFERENCE LISTING

"THIS DRAWING AND SPECIFICATIONS, HEREIN, ARE THE PROPERTY OF DIGITAL EQUIPMENT CORPORATION AND SHALL NOT BE REPRODUCED OR COPIED OR USED IN WHOLE OR IN PART AS THE BASIS FOR THE MANUFACTURE OR SALE OF ITEMS WITHOUT WRITTEN PERMISSION.
COPYRIGHT ©1972 DIGITAL EQUIPMENT CORPORATION"

NEXT HIGHER ASSY.

B-DD-KD11-B

SCALE

SHEET 1 OF 3

SIZE	CODE	NUMBER	REV.
K	MP	KD11-B-4	

DIST.

000 RS-1	001 RT-1	002 *****	003 ET2-2	004 ET2-3	005 R1-1	006 SB1-8	007 S0-2
010 ERT-1	011 ET-1	012 SB2-2	013 B2-2D	014 S2-3	015 B-1	016 S3-2	017 S3-3
020 SB0-7	021 T-1	022 SB2-4	023 SB2-5	024 SB2-6	025 S6-2	026 S6-3	027 S6-4
030 S6-5	031 SB2-7	032 S7-2	033 S7-3	034 S7-4	035 S7-5	036 ET2-5	037 ET2-6
040 RG-1	041 H-1	042 LC-1	043 PF-1	044 *****	045 BT-1	046 ERT1A	047 SBE-1
050 SB0-6	051 ET2-7	052 SB0-8	053 F-2	054 *****	055 *****	056 *****	057 D6-4
060 URTX	061 F-5	062 F-1	063 W-1	064 URTR	065 D1-6	066 *****	067 SB0-1
070 D3-3	071 D3-4	072 D3-5	073 *****	074 RS-3	075 D6-2	076 *****	077 D6-3
100 CS-1	101 D0-1	102 *****	103 D1-1	104 D7-3	105 D2-1	106 D7-5	107 D3-1
110 DBE-1	111 D4-1	112 CC-1	113 D5-1	114 *****	115 D6-1	116 SC-1	117 D7-1
120 *****	121 *****	122 *****	123 D0-2	124 D0-3	125 D0-4	126 D0-5	127 D0-6
130 D0-7	131 D0-8	132 D0-9	133 *****	134 S3-4	135 D0-12	136 D0-13	137 D0-14
140 D0-15	141 D0-16	142 D0-17	143 D0-18	144 SB1-5	145 A145	146 B-3	147 B-2
150 *****	151 CCM-1	152 MB-2	153 ERT1B	154 MB-0	155 D0-3A	156 DB0-1	157 D0-2
160 D3-2	161 *****	162 D0-3	163 D1-4	164 DB0-2	165 D0-10	166 SB1-1	167 SB2-1
170 *****	171 *****	172 SB1-2	173 SB1-3	174 SB1-4	175 *****	176 SB1-6	177 SB1-7
200 D1-2	201 S0-1	202 *****	203 S1-1	204 J1-1	205 S2-1	206 J2-4	207 S3-1
210 D1-3	211 S4-1	212 J2-1	213 S5-1	214 J2-3	215 S6-1	216 J2-5	217 S7-1
220 SB2-3	221 R1-2	222 R1-3	223 R1-4	224 R1-5	225 R1-6	226 ET-6	227 R2-1
230 R2-2	231 R2-3	232 R2-4	233 *****	234 R2-6	235 R2-7	236 R2-8	237 R2-9
240 MB-1	241 RS-1A	242 *****	243 *****	244 S1-2	245 ET-2	246 ET-3	247 ET-5
250 DE-1	251 ET-7	252 ET-8	253 ET-9	254 ET-10	255 ET-11	256 ET-12	257 ET-13
260 J1-2	261 J2-1A	262 J2-2	263 J2-6	264 J2-7	265 J2-8	266 *****	267 *****
270 D0-1	271 *****	272 CCS-3	273 IT-1	274 S3-5	275 *****	276 CCS-2	277 *****
300 D6-5	301 S2-2	302 H-2	303 CD1-2	304 DB0-3	305 B2-2	306 *****	307 CE1-2
310 D7-2	311 CL-1	312 CD2-1	313 CD1-1	314 CD1-4	315 CE2-1	316 CCS-1	317 CE1-1
320 D7-4	321 CS-3	322 CS-2	323 *****	324 SB0-3	325 INT-1	326 CE1-3	327 *****
330 SB2-8	331 D2-2	332 D0-4	333 B2-2A	334 D1-5	335 B2-2B	336 *****	337 CD2-2
340 SB0-4	341 D2-3	342 D0-11	343 B2-2C	344 *****	345 *****	346 SB0-2	347 RS-2
350 CCM-2	351 RS-4	352 U1-1	353 U2-1	354 U3-1	355 U4-1	356 *****	357 RST-1
360 *****	361 SB0-5	362 *****	363 *****	364 F-4	365 F-3	366 *****	367 CL-3
370 *****	371 CE2-2	372 CD1-5	373 U5-1	374 CD1-3	375 CL-2	376 *****	377 *****

A145 145	D6-1 115	F-4 364	S5-1 213
B-1 015	D6-2 075	F-5 061	S6-1 215
B-2 147	D6-3 077	H-1 041	S6-2 025
B-3 146	D6-4 057	H-2 302	S6-3 026
B2-2 305	D6-5 300	INT-1 325	S6-4 027
B2-2A 333	D7-1 117	IT-1 273	S6-5 030
B2-2B 335	D7-2 310	J1-1 204	S7-1 217
B2-2C 343	D7-3 104	J1-2 260	S7-2 032
B2-2D 013	D7-4 320	J2-1 212	S7-3 033
BG-1 240	D7-5 106	J2-1A 261	S7-4 034
BT-1 045	DB0-1 156	J2-2 262	S7-5 035
CC-1 112	DB0-2 164	J2-3 214	SB1-1 166
CCM-1 151	DB0-3 304	J2-4 206	SB1-2 172
CCM-2 350	DBE-1 110	J2-5 216	SB1-3 173
CCS-1 316	DE-1 250	J2-6 263	SB1-4 174
CCS-2 276	DO-1 270	J2-7 264	SB1-5 144
CCS-3 272	DO-10 165	J2-8 265	SB1-6 176
CD1-1 313	DO-11 342	LC-1 042	SB1-7 177
CD1-2 303	DO-12 135	MB-0 154	SB1-8 006
CD1-3 374	DO-13 136	MB-1 240	SB2-1 167
CD1-4 314	DO-14 137	MB-2 152	SB2-2 012
CD1-5 372	DO-15 140	PF-1 043	SB2-3 220
CD2-1 312	DO-16 141	R1-1 005	SB2-4 022
CD2-2 337	DO-17 142	R1-2 221	SB2-5 023
CE1-1 317	DO-18 143	R1-3 222	SB2-6 024
CE1-2 307	DO-2 123	R1-4 223	SB2-7 031
CE1-3 326	DO-3 124	R1-5 224	SB2-8 330
CE2-1 315	DO-4 125	R1-6 225	SBE-1 047
CE2-2 371	DO-5 126	R2-1 227	SB0-1 067
CL-1 311	DO-6 127	R2-2 230	SB0-2 346
CL-2 375	DO-7 130	R2-3 231	SB0-3 324
CL-3 367	DO-8 131	R2-4 232	SB0-4 340
CS-1 100	DO-9 132	R2-6 234	SB0-5 361
CS-2 322	ERT-1 010	R2-7 235	SB0-6 050
CS-3 321	ERT1A 046	R2-8 236	SB0-7 020
D0-1 101	ERT1B 153	R2-9 237	SB0-8 052
D0-2 157	ET-1 011	RS-1 000	SC-1 116
D0-3 162	ET-10 254	RS-1A 241	T-1 021
D0-3A 155	ET-11 255	RS-2 347	U1-1 352
D0-4 332	ET-12 256	RS-3 074	U2-1 353
D1-1 103	ET-13 257	RS-4 351	U3-1 354
D1-2 200	ET-2 245	RST-1 357	U4-1 355
D1-3 210	ET-3 246	RT-1 001	U5-1 373
D1-4 163	ET-5 247	S0-1 201	URTR 064
D1-5 334	ET-6 226	S0-2 007	URTX 060
D1-6 065	ET-7 251	S1-1 203	W-1 063
D2-1 105	ET-8 252	S1-2 244	000
D2-2 331	ET-9 253	S2-1 205	000
D2-3 341	ET2-2 003	S2-2 301	000
D3-1 107	ET2-3 004	S2-3 014	000
D3-2 160	ET2-5 036	S3-1 207	000
D3-3 070	ET2-6 037	S3-2 016	000
D3-4 071	ET2-7 051	S3-3 017	000
D3-5 072	F-1 062	S3-4 134	000
D4-1 111	F-2 053	S3-5 274	000
D5-1 113	F-3 366	S4-1 211	000

PAGE REVISION CONTROL SHEET

SH NO.	PAGE REVISIONS	REMARKS
1	J K L	
2	J K L	
3	J J J	
4	J J J	
5	J J J	
6	J J J	
7	J J J	
8	J J J	
9	J J J	
10	J K L	
11	J J J	

ECO NO.	ETCH REV.	ENG.	DATE
00007	B	M.T.	10-11-72
00008	B	B.A.	10-30-72
00009	B	M.T.	11-27-72

FIRST USED ON OPTION/MODEL

KD11-B

DRN. B. Hall	DATE 10-16-72
CHK'D. M. Titelbaum	DATE 10/26/72
ENG. M. Titelbaum	DATE 10/26/72
PROJ. ENG. M. Titelbaum	DATE
PROD.	DATE

digital EQUIPMENT CORPORATION
MAYNARD, MASSACHUSETTS

TITLE

DATA PATHS

"THIS DRAWING AND SPECIFICATIONS, HEREIN, ARE THE PROPERTY OF DIGITAL EQUIPMENT CORPORATION AND SHALL NOT BE REPRODUCED OR COPIED OR USED IN WHOLE OR IN PART AS THE BASIS FOR THE MANUFACTURE OR SALE OF ITEMS WITHOUT WRITTEN PERMISSION.
COPYRIGHT © DIGITAL EQUIPMENT CORPORATION"

NEXT HIGHER ASSY.

B-DD-KD11-B

SCALE +-+

SHEET 1 OF 11

SIZE	CODE	NUMBER	REV.
B	CS	M7260-0-1	L

DIST.

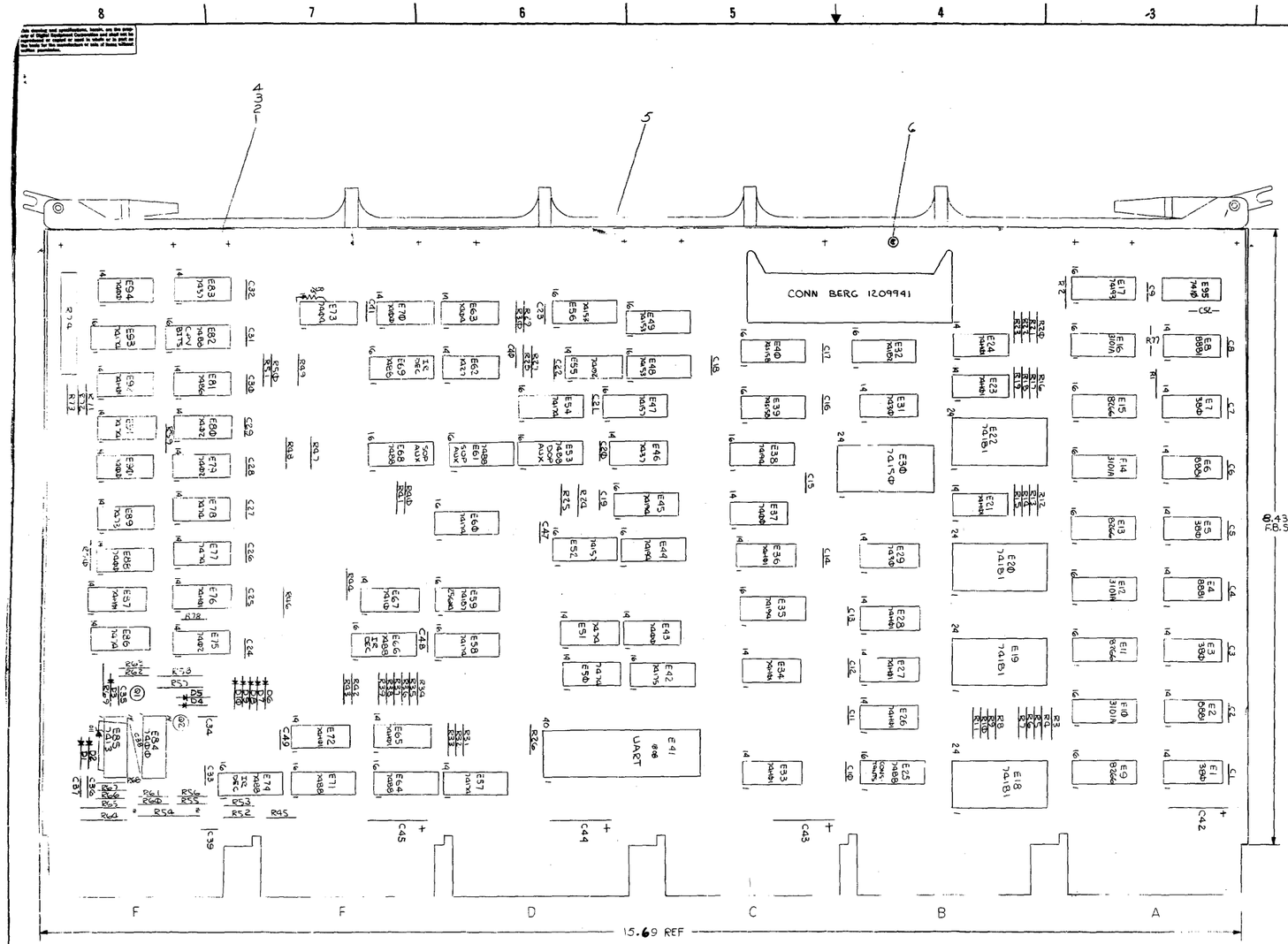

NOTE.
1. UNLESS OTHERWISE NOTED RESISTANCE IS IN OHMS CAPACITANCE IS IN PICOFARADS.

1	D11	DIODE 1N5231B, 1/2W, 5%	1109443	72
1	R78	RES 220Ω, 1/2W, 5%	1300274	71
1		CONN, BERG	1209941	55
1	R74	RES 500Ω TRIMPOT	1305681	54
1	R34	RES 10K, 1/4W, 5%	1300479	53
				52
1	R67	RES 82Ω 1/4W, 5%	1301277	51
1	R66	RES 750Ω 1/4W, 5%	1301401	50
1	R65	RES 560Ω 1/2W, 5%	1300338	49
1	R64	RES 68Ω 1/2W, 10%	1300220	48
1	R63	RES 150Ω 1/4W, 5%	1300250	47
2	R57, R58	RES 12K 1/2W, 5%	1300687	46
3	R56, R62, R36	RES 470Ω 1/4W, 5%	1300316	45
1	R55.	RES 1.5K 1/4W, 5%	1300391	44
1	R54	RES 750Ω 1/4W, 5%	1302385	43
4	E2, E4, E6, E8	IC DEC 8881	1909705	42
25	R25, R28 THRU R33, R35, R37- R45, R48, R50 THRU R53, R71, R72, R15	RES 2K 1/4W, 5%	1302388	41
35	R1 THRU R24, R26, R27, R46, R47 R49, R59, R60 R61, R68, R70, R69	RES 1K 1/4W, 5%	1300365	40
2	Q1, Q2	TRANSISTOR DEC 5534D	1503409	39
1	E41	IC DEC 1808 UART	1910459	38
1	E30	IC DEC 74150	1910153	37
4	E18, E19, E20, E22	IC DEC 74181	1909982	36
5	E54, E57, E58, E60, E93	IC DEC 74174	1910652	35
3	E48, E49, E56	IC DEC 74153	1909937	34
2	E47, E52	IC DEC 74157	1910655	33
1	E42	IC DEC 74175	1910631	32
2	E39, E40	IC DEC 74S158	1910549	31
4	E35, E38, E44, E45	IC DEC 74194	1910623	30
1	E32	IC DEC 74182	1910019	29
1	E17	IC DEC 74193	1910018	28
4	E10, E12, E14, E16	IC INTEL 3101A	1910653	27
4	E9, E11, E13, E15	IC DEC 8266	1909934	26
1	E89	IC DEC 7473	1905587	25
1	E85	IC DEC 7413	1909989	24
1	E81	IC DEC 7486	1910011	23
2	E67, E95	IC DEC 7410	1905576	22
2	E63, E73	IC DEC 7400	1909686	21
1	E62	IC DEC 7427	1910878	20
4	E55, E75, E79, E80	IC DEC 7402	1909004	19
6	E50, E51, E77, E78, E86, E91	IC DEC 7474	1905547	18
2	E96, E83	IC DEC 7437	1910091	17
7	E37, E43, E70, E84, E88, E90, E94	IC DEC 7400	1905575	16
2	E29, E31	IC DEC 7430	1905578	15
14	E21, E23 E24, E26, E27, E28, E33, E34, E36, E65, E72, E76, E87, E92	IC DEC 74H01	1909849	14
4	E1, E3, E5, E7	IC DEC 380	1909485	13
10	D1 THRU D10	DIODE 664	1100114	12
4	C42 THRU C45	CAP 6.8 MFD, 35V, S TANT	1005306	11
				10
1	C34	CAP 1000 PFD, 100V, 5%, MICA	1000042	9
1	C36	CAP .47 MFD, 35V, 10%, S TANT	1005965	8
41	C1 THRU C33, C35, C37, C39 C40, C41, C47, C48, C49	CAP .01 MFD 100V, 20%, DISC	1001610	7
2		EYELET	9006732	6
1		HANDLE, MODULE	EPS-1210711-2	5
1		ETCHED CIRCUIT BOARD	3009764	4
REF		MODULE ECO HISTORY	B-MH-M7260-D-6	3
REF		ASSY/DRILL HOLE LAYOUT	E-AH-M7260-D-5	2
REF		X-Y COORDINATE HOLE LOCATION	K-CO-M7260-D-6	1
QTY	REF DESIGNATION	DESCRIPTION	PART NO.	ITEM NO.

PARTS LIST

AA2, FA2, EA2, DA2 +5V
EA2

.01 MFD
C1 THRU C33, C35
C37, C40, C41, C47,
C48, C49, C39

6.8 MFD
C42 THRU C45

AC2, AT2 GND
CC2, DT2, DC2, DT1
EC2, ET1, FC2

1	C52	CAP. 150PF, 100V, 5%	1000019	70	10	D1 THRU D10	DIODE 664	1100114	12
2	R77, R73	RES. 47, 1/4W, 5%	1300202	69	4	C42 THRU C45	CAP 6.8 MFD, 35V, S TANT	1005306	11
1	C38	CAP. 1 MFD, 35V, 10% STANT	1001776	68					10
1	E82	IC IM5600	23-A12A1	67	1	C34	CAP 1000 PFD, 100V, 5%, MICA	1000042	9
1	E74	IC IM5600	23-A11A1	65	1	C36	CAP .47 MFD, 35V, 10%, S TANT	1005965	8
1	E71	IC IM3600	23-A10A1	64	41	C1 THRU C33, C35, C37, C39 C40, C41, C47, C48, C49	CAP .01 MFD 100V, 20%, DISC	1001610	7
1	E69	IC IM3600	23-A08A1	63					
1	E68	IC IM5600	23-A06A1	62					
1	E66	IC IM5600	23-A05A1	61	2		EYELET	9006732	6
1	E64	IC IM5600	23-A04A1	60	1		HANDLE, MODULE	EPS-1210711-2	5
1	E61	IC IM5600	23-A03A1	59	1		ETCHED CIRCUIT BOARD	3009764	4
1	E59	IC 74167	23-A03A2	58	REF		MODULE ECO HISTORY	B-MH-M7260-D-6	3
1	E53	IC IM5600 ROM	23-A02A1	57	REF		ASSY/DRILL HOLE LAYOUT	E-AH-M7260-D-5	2
1	E25	IC IM5600 32x8 PROM	23-A01A1	56	REF		X-Y COORDINATE HOLE LOCATION	K-CO-M7260-D-6	1
QTY	REF DESIGNATION	DESCRIPTION	PART NO	ITEM NO.	QTY	REF DESIGNATION	DESCRIPTION	PART NO.	ITEM NO.

PARTS LIST

DEC 74S158	8	16
DEC 74193	8	16
DEC 7489	8	16
DEC 1808	20	40
DEC 7418	12	24
DEC 74182	8	16
DEC 74150	12	24
DEC 74194	8	16
DEC 74175	8	16
DEC 74153	8	16
DEC 74157	8	16
DEC 74178	8	16
DEC 7488	8	16
DEC 74174	8	16
IC TYPE	GND	+5V

GND AND 5V ARE USUALLY PIN 7 AND 14 RESPECTIVELY EXCEPTIONS ARE STATED ABOVE

IC PIN LOCATIONS

ITEM NO.	AWG	FROM PT	TO PT

JUMPER LIST

ETCH BOARD REV	B

6534D	NONE		
DEC NO.	EIA NO.	DEC NO.	EIA NO.

SEMICONDUCTOR CONVERSION CHART

DRW. W. MACKIE 05/17/72
DES. [illegible]
ENG. [illegible]
MFG. [illegible]
QA [illegible]
NEXT HIGHER ASSY B-DD-KD11-B
SCALE
SHEET 2 OF

EQUIPMENT CORPORATION
MAYNARD MASSACHUSETTS

TITLE DATA PATHS

SIZE C CODE IDENT NO. DRAWING E CS M7260-0-1 REV. L

1	11/16/72	M7260-00009	M. STAUBACH	11/16/72	
2	11/17/72	M7260-00008	M. STAUBACH	11/17/72	
3	11/17/72	M7260-00007	B. ARMSTRONG	11/17/72	
4	11/17/72	M7260-00006	B. ARMSTRONG	11/17/72	
5	11/17/72	M7260-00005	B. ARMSTRONG	11/17/72	
6	11/17/72	M7260-00004	B. ARMSTRONG	11/17/72	
7	11/17/72	M7260-00003	B. ARMSTRONG	11/17/72	
8	11/17/72	M7260-00002	B. ARMSTRONG	11/17/72	
9	11/17/72	M7260-00001	B. ARMSTRONG	11/17/72	
ORIG.		CHANGED NO.			

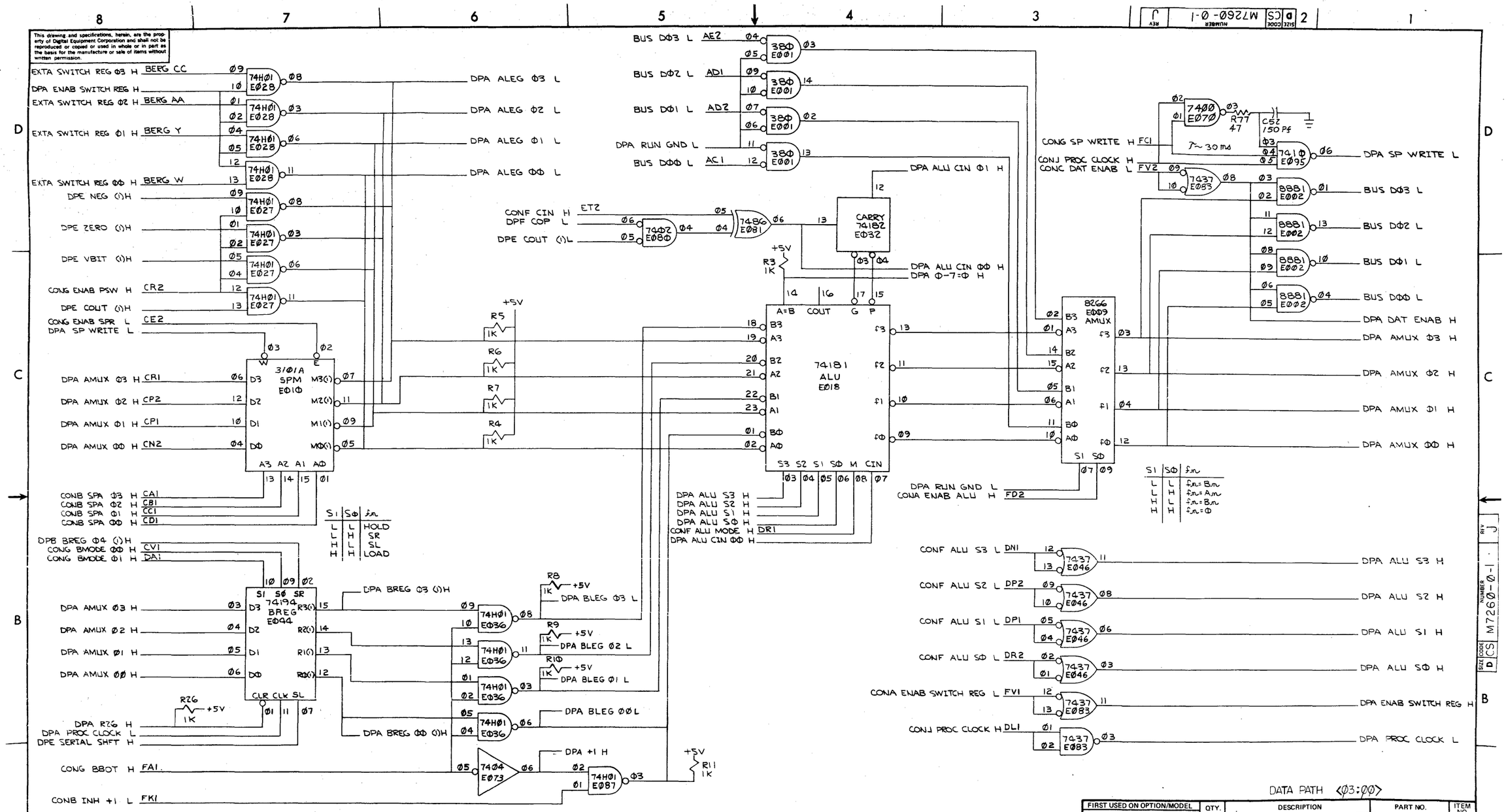

This drawing and specifications, herein, are the property of Digital Equipment Corporation and shall not be reproduced or copied or used in whole or in part as the basis for the manufacture or sale of items without written permission.

FIRST USED ON OPTION/MODEL	QTY.	DESCRIPTION	PART NO.	ITEM NO.
11/Ø5		PARTS LIST		

UNLESS OTHERWISE SPECIFIED DIMENSION IN INCHES. TOLERANCES

DECIMALS	ANGLES
.XXX = .005	±0° 30'
.XX = .02	
.X = .1	

REMOVE BURRS AND BREAK SHARP CORNERS SURFACE QUALITY ✓

MATERIAL

FINISH

DRN. W. MAJOR	DATE 1/18/72	digital EQUIPMENT CORPORATION MAYNARD MASSACHUSETTS
CHKD.	DATE 4/27/72	
ENG.	DATE 4/26/72	TITLE DATA PATHS
PROJ. ENG.	DATE 4/26/72	
PROD.	DATE 4/27/72	(DPA)

NEXT HIGHER ASSY. B-DD-KD11-B

SCALE

SHEET 3 OF

SIZE	CODE	NUMBER	REV.
D	CS	M726Ø-Ø-1	J

DIST.

REVISIONS | CHANGE NO. | REV | CHK

DEC FORM NO DRD 102-B

This drawing and specifications, herein, are the property of Digital Equipment Corporation and shall not be reproduced or copied or used in whole or in part as the basis for the manufacture or sale of items without written permission.

EXTA SWITCH REG Ø7 H BERG MM
DPA ENAB SWITCH REG H
EXTA SWITCH REG Ø6 H BERG KK
EXTA SWITCH REG Ø5 H BERG HH
EXTA SWITCH REG Ø4 H BERG EE
DPE PSW Ø7 (1)H
CONG ENAB PSW H
DPE PSW Ø6 (1)H
DPE PSW Ø5 (1)H
DPE TBIT (1)H
CONG ENAB SPR L
DPA SP WRITE L

74H01 E024 · 74H01 E024 · 74H01 E024 · 74H01 E024 · 74H01 E034 · 74H01 E034 · 74H01 E034 · 74H01 E034

DPB ALEG Ø7 L
DPB ALEG Ø6 L
DPB ALEG Ø5 L
DPB ALEG Ø4 L

3101A SPM E012

CONB SPA Ø3 H
CONB SPA Ø2 H
CONB SPA Ø1 H
CONB SPA Ø0 H
DPE RIGHT SHFT Ø7 H
CONG BMODE Ø0 H
CONG BMODE Ø1 H
DPB AMUX Ø7 H DK1
DPB AMUX Ø6 H DJ1
DPB AMUX Ø5 H DK2
DPB AMUX Ø4 H DJ2
DPB RAM H
DPA PROC CLOCK L
DPA BREG Ø3 (1)H
CONG BBOT H

74196 BREG E045

DPB BREG Ø7 (1)H
DPB BREG Ø6 (1)H
DPB BREG Ø5 (1)H
DPB BREG Ø4 (1)H

7400 E037 · 7400 E037 · 7400 E037 · 7400 E037

DPB BLEG Ø7 L
DPB BLEG Ø6 L
DPB BLEG Ø5 L
DPB BLEG Ø4 L

+5V
R20 1K
R21 1K
R23 1K
R22 1K
R24 1K

BUS DØ7 L AH2
BUS DØ6 L AF1
BUS DØ5 L AF2
DPA RUN GND L
BUS DØ4 L AE1

38Ø E003 · 38Ø E003 · 38Ø E003 · 38Ø E003

DPB ALU CIN Ø2 H
CARRY 74182 FØ32
Ø1 Ø2
DPA Ø-7=Ø H

74181 ALU E019

A=B COUT G P
B3 A3 B2 A2 B1 A1 BØ AØ
F3 F2 F1 FØ
S3 S2 S1 SØ M CIN
DPA ALU S3 H
DPA ALU S2 H
DPA ALU S1 H
DPA ALU SØ H
CONF ALU MODE H
DPA ALU CIN Ø1 H

DPA RUN GND L
CONA ENAB ALU H

8286 E011 AMUX

S1 SØ

DPA DAT ENAB H

8881 E004 · 8881 E004 · 8881 E004 · 8881 E004

BUS DØ7 L
BUS DØ6 L
BUS DØ5 L
BUS DØ4 L

DPB AMUX Ø7 H
DPB AMUX Ø6 H
DPB AMUX Ø5 H
DPB AMUX Ø4 H

23-AØIA1 E025 CONSTANTS

CONB SPA ØØ H
CONB SPA Ø1 H
CONB SPA Ø2 H
CONB SPA Ø3 H
CONG SP WRITE H
ENB
CONE ALLOW CONSTANTS L CEI

DPB ALEG Ø7 L
DPB ALEG Ø6 L
DPB ALEG Ø5 L
DPB ALEG Ø4 L
DPB ALEG Ø3 L
DPB ALEG Ø2 L
DPB ALEG Ø1 L
DPB ALEG ØØ L

DATA PATH (07:04)

FIRST USED ON OPTION/MODEL	QTY.	DESCRIPTION	PART NO.	ITEM NO.
11/05		PARTS LIST		

UNLESS OTHERWISE SPECIFIED DIMENSION IN INCHES. TOLERANCES
DECIMALS: XXX ± .005, XX ± .02, X ± .1 — ANGLES: ±0° 30'
REMOVE BURRS AND BREAK SHARP CORNERS SURFACE QUALITY ✓
MATERIAL — FINISH

DRN. W.MAJOR DATE 2/11/72
CHK'D DATE 2/17/72
ENG. DATE 4/24/72
PROJ. ENG. DATE 4/24/72
PROD. DATE 7/27/72
NEXT HIGHER ASSY. B-DD-KD11-B
SCALE — SHEET 4 OF

digital EQUIPMENT CORPORATION MAYNARD, MASSACHUSETTS

TITLE: DATA PATHS

SIZE D CODE CS NUMBER M7260 REV

REVISIONS: REV | CHANGE NO | CHK

DEC FORM NO

SIZE D CODE CS NUMBER M7260-0-1 REV J

This drawing and specifications, herein, are the property of Digital Equipment Corporation and shall not be reproduced or copied or used in whole or in part as the basis for the manufacture or sale of items without written permission.

BUS DI1 L
BUS DIØ L
BUS DØ9 L
DPA RUN GND L
BUS DØ8 L

AK2 AJ1 AJ2 AH1

3ØØ EØØ5

DPC ALU CIN Ø3 H

CARRY 74182 FØ32

+5V R16 1K DB1 DPC 8-15=Ø H

DPA DAT ENAB H

8881 EØØ6

BUS DI1 L
BUS DIØ L
BUS DØ9 L
BUS DØ8 L

EXTA SWITCH REG 11 H BERG K
DPA ENAB SWITCH REG H
EXTA SWITCH REG Ø H BERG H
EXTA SWITCH REG Ø9 H BERG E
EXTA SWITCH REG Ø8 H BERG C

74HØ1 EØ21

DPC ALEG 11 L
DPC ALEG 1Ø L
DPC ALEG Ø9 L
DPC ALEG Ø8 L

CONG ENAB SPL L CF2
DPA SP WRITE L

+5V R14 R15 R13 R12 1K

3101A SPM EØ14

CONB SPA Ø3 H
CONB SPA Ø2 H
CONB SPA Ø1 H
CONB SPA ØØ H

DPC BREG 11 (1)H
DPC BREG Ø8 (1)H

DPD BREG 12 (1)H
CONG BMODE ØØ H
CONG BMODE Ø1 H

74S158 EØ39 BLEG MUX

DPC BLEG 11 L
DPC BLEG 1Ø L
DPC BLEG Ø9 L
DPC BLEG Ø8 L

DPC AMUX 11 H CK1
DPC AMUX 1Ø H CK2
DPC AMUX Ø9 H CK1
DPC AMUX Ø8 H CK2

74196 BREG EØ35

DPA RZG H
DPA PROP. CLOCK L
DPB BREG Ø7 (1)H
DPA +1 H
CONG BYPP H CL2

E	S	:n
H	-	:n=Ø
L	L	:n=An
L	H	:n=Bn

74181 ALU EØ2Ø

DPA ALU S3 H
DPA ALU S2 H
DPA ALU S1 H
DPA ALU SØ H
CONF ALU MODE H
DPB ALU CIN Ø2 H

DPA RUN GND L
CONA ENAB ALU H

8266 EØ13 AMUX

DPC AMUX 11 H
DPC AMUX 1Ø H
DPC AMUX Ø9 H
DPC AMUX Ø8 H

DATA PATH <11:Ø8>

FIRST USED ON OPTION/MODEL	QTY.	DESCRIPTION	PART NO.	ITEM NO.
11/05		PARTS LIST		

UNLESS OTHERWISE SPECIFIED DIMENSION IN INCHES. TOLERANCES: DECIMALS .XXX = .005, .XX = .02, X = .1; ANGLES ±0° 30'. REMOVE BURRS AND BREAK SHARP CORNERS SURFACE QUALITY ✓. MATERIAL —. FINISH —.

DRN. W.MAJOR DATE 2/9/72
CHK'D DATE 4/7/72
ENG. DATE 4/24/72
PROJ. ENG. DATE 4/24/72
PROD. DATE 4/23/72

NEXT HIGHER ASSY. B-DD-KD11-B

digital EQUIPMENT CORPORATION MAYNARD MASSACHUSETTS

TITLE: DATA PATHS (DPC)

SIZE D | CODE CS | NUMBER M7260-0-1 | REV J

SCALE —

SHEET 5 OF

DIST.

REVISIONS | REV. | CHANGE NO | CHK

DEC FORM NO DRD 107-B

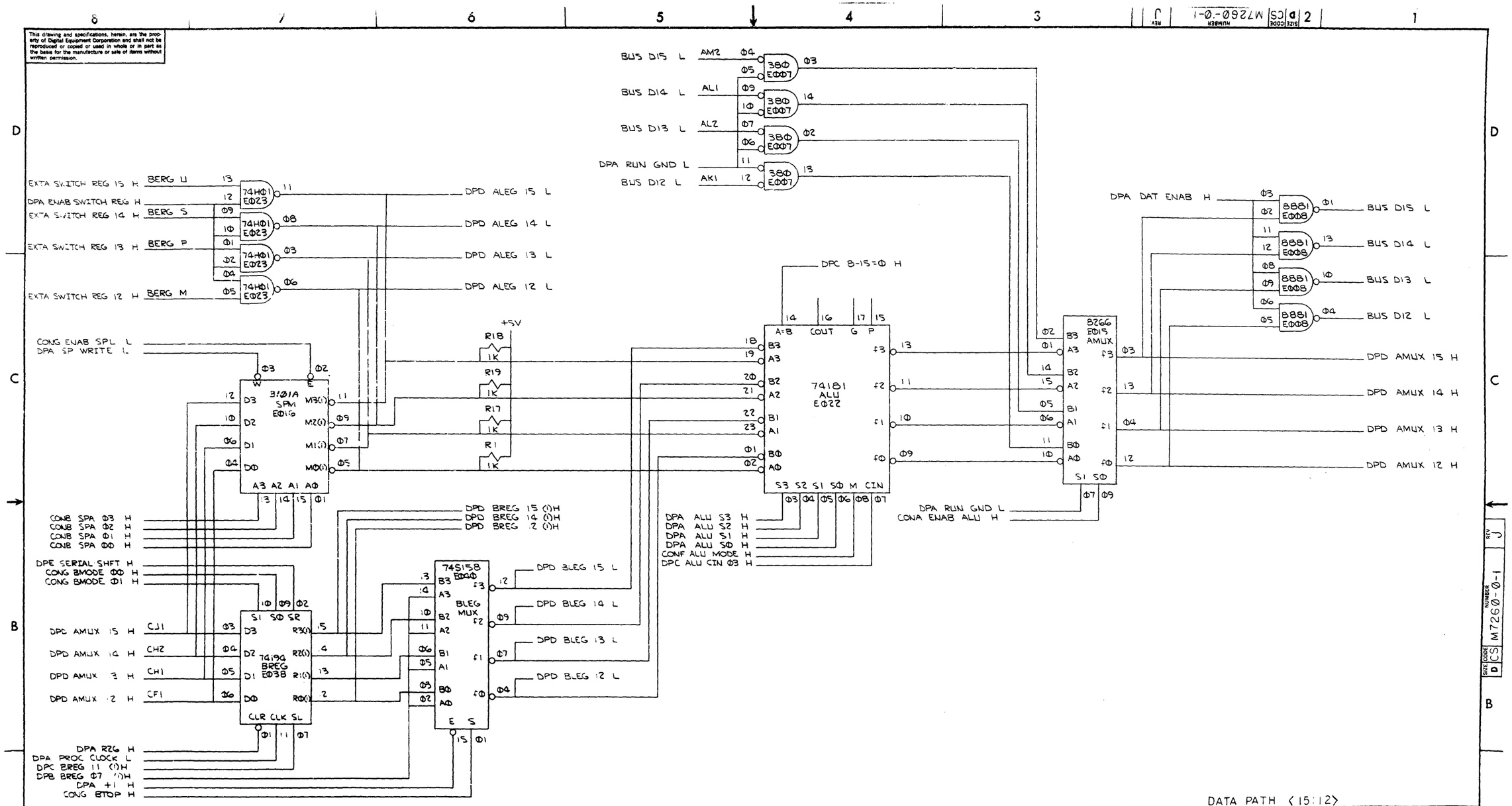

DATA PATH <15:12>

FIRST USED ON OPTION/MODEL	QTY.	DESCRIPTION	PART NO.	ITEM NO.
11/05		PARTS LIST		

UNLESS OTHERWISE SPECIFIED DIMENSION IN INCHES. TOLERANCES

DECIMALS	ANGLES
.XXX = .005	±0° 30'
.XX = .02	
.X = .1	

REMOVE BURRS AND BREAK SHARP CORNERS SURFACE QUALITY ✓

MATERIAL

FINISH

DRN. W.MAJOR	DATE 2/26/72	digital EQUIPMENT CORPORATION MAYNARD MASSACHUSETTS
CHKD.	DATE 4/27/72	
ENG.	DATE 4/26/72	TITLE DATA PATHS
PROJ. ENG.	DATE 4/26/72	
PROD.	DATE 4/27/72	(DPD)
NEXT HIGHER ASSY. B-DD-KD11-B		SIZE D CODE CS NUMBER M7260-0-1 REV. J
SCALE		
SHEET 6 OF		DIST.

REVISIONS: CHK | CHANGE NO | REV

DEC FORM NO DRD 103-B

This drawing and specifications, herein, are the property of Digital Equipment Corporation and shall not be reproduced or copied or used in whole or in part as the basis for the manufacture or sale of items without written permission.

DPA RUN GND L

DPF NEG DEL (I)H
DPA AMUX Φ3 H
DPF ZERO DEL (I)H
DPA AMUX Φ2 H
DPF SET V H
DPA AMUX Φ1 H
DPF SET COUT H
DPA AMUX ΦΦ H
CONH PROC INIT H
DPF AUX DEL (I)L
DM1

74157 EΦ52 CC MUX

E	S	fn
H	L	fn = Φ
L	L	fn = An
L	H	fn = Bn

DPE NEG (I)H — 74174 NEG EΦ51
DPE ZERO (I)H — 74174 ZERO EΦ50
DPE VBIT (I)H — 74174 VBIT EΦ50
DPE COUT (I)H — 74174 COUT EΦ51
DPE COUT (Φ)H

CONG LOAD PSW L
CONJ PROC CLOCK H
DM2
DPA R2G H
DPF C CLK DEL (I)L
CONH PROC INIT L
DL2

DPA BLEG ΦΦ L
DPA BREG ΦΦ (I)H
DPD BLEG 15 L
DPD BREG 15 (I)H
DPA ALUS1 H
DPA ALUSΦ H

DPE L SHIFT SIGN H

74153 ROT MUX 2 EΦ49
DPE ROT COUT H
DPE ROT NEG H

74153 ROT MUX 1 EΦ48

S1	SΦ	FUNCTION
L	L	ROR
L	H	ASR
H	L	ROL
H	H	ASL

DPE SERIAL SHFT H

74157 EΦ47 BYTE MUX
DPC BREG ΦB H
DPD BREG 4 (I)H
DPB BREG Φ6 (I)H
DPE RIGHT SHFT Φ7 H
DPE L SHIFT SIGN H
STB SΦ
DPA RUN GND L
CONF AUX BYTE H

DPB AMUX Φ7 H
DPD AMUX 15 H
DPA Φ-7=Φ H
DPE Φ-15=Φ H

74153 ROT CC MUX EΦ56
DPE NEG H
DPE SET ≠ H

DPG BYTE H
DPF ROTATE H

DPD BLEG 14 L
DPD BLEG 13 L
DPD BLEG 12 L
DPC BLEG 11 L
DPC BLEG 10 L
DPC BLEG Φ9 L
DPC BLEG Φ8 L
DPB BLEG Φ7 L
DPB BLEG Φ6 L
DPB BLEG Φ5 L
DPB BLEG Φ4 L
DPA BLEG Φ3 L
DPA BLEG Φ2 L
DPA BLEG Φ1 L

74ΦΦ EΦ31
74ΦΦ EΦ29
74Φ2 EΦ55

DPA RUN GND L

74150 E3Φ CONSOLE MUX

DPD BLEG 15 L	16	DI5
DPD BLEG 14 L	17	DI4
DPD BLEG 13 L	18	DI3
DPD BLEG 12 L	19	DI2
DPC BLEG 11 L	20	DI1
DPC BLEG 10 L	21	DIΦ
DPC BLEG Φ9 L	22	DΦ9
DPC BLEG Φ8 L	23	DΦ8
DPB BLEG Φ7 L	Φ1	DΦ7
DPB BLEG Φ6 L	Φ2	DΦ6
DPB BLEG Φ5 L	Φ3	DΦ5
DPB BLEG Φ4 L	Φ4	DΦ4
DPA BLEG Φ3 L	Φ5	DΦ3
DPA BLEG Φ2 L	Φ6	DΦ2
DPA BLEG Φ1 L	Φ7	DΦ1
DPA BLEG ΦΦ L	Φ8	DΦΦ

S3 S2 S1 SΦ

BERG F
DPE DAK H

EXTA SCAN ADDRS Φ1 (I)H BERG N
EXTA SCAN ADDRS Φ2 (I)H BERG L
EXTA SCAN ADDRS Φ4 (I)H BERG J
EXTA SCAN ADDRS Φ8 (I)H BERG D

PSW

74175 EΦ42 PSW 7:4
DPB AMUX Φ7 H — R3(I) — DPE PSW Φ7 (I)H — R3(Φ) — DD1 — DPE PSW Φ7 (Φ)H
DPB AMUX Φ6 H — R2(I) — DPE PSW Φ6 (I)H — R2(Φ) — DC1 — DPE PSW Φ6 (Φ)H
DPB AMUX Φ5 H — R1(I) — DPE PSW Φ5 (I)H — R1(Φ) — DD2 — DPE PSW Φ5 (Φ)H
DPB AMUX Φ4 H — RΦ(I) — DPE TBIT (I)H — RΦ(Φ)
CLR CLK
CONH PROC INIT L
CONJ PROC CLOCK H
CONG LOAD PSW L
CONA ENAB ALU H

+5V R59 1K
DPE R59 H

74174 DEL EΦ91
FS2 DPE T DEL (I)L
DPF LOAD IR L
BERG T DPE PUP L

74ΦΦ EΦ63
74Φ2 EΦ86
74ΦΦ EΦ70

DPA Φ-7=Φ H
DPC B-15=Φ H
DPE Φ-15=Φ H

REVISIONS	REV
CHANGE NO	
CHK	

FIRST USED ON OPTION/MODEL	QTY.	DESCRIPTION	PART NO.	ITEM NO.
11/05		PARTS LIST		

UNLESS OTHERWISE SPECIFIED DIMENSION IN INCHES. TOLERANCES
DECIMALS: .XXX ± .005, .XX ± .02, .X ± .1 — ANGLES: ± 0° 30'
REMOVE BURRS AND BREAK SHARP CORNERS SURFACE QUALITY ✓
MATERIAL
FINISH

DRN. W. MAJOR	DATE 1/7/72	digital EQUIPMENT CORPORATION MAYNARD MASSACHUSETTS
CHK.	DATE 1/27/72	
ENG.	DATE 4/26/72	TITLE: DATA PATHS (DPE)
PROJ. ENG.	DATE 4/26/72	
PROD.	DATE 4/27/72	

NEXT HIGHER ASSY. B-DD-KD11-B
SCALE
SHEET 7 OF

SIZE	CODE	NUMBER	REV.
D	CS	M7260-0-1	J.

DIST.

DEC FORM NO

This drawing and specifications, herein, are the property of Digital Equipment Corporation and shall not be reproduced or copied or used in whole or in part as the basis for the manufacture or sale of items without written permission.

74174 E058 IR
DPD AMUX 15 H — D5 R5(I) — DPF IR 15 (I)H
DPD AMUX 14 H — D4 R4(I) — DPF IR 14 (I)H
DPD AMUX 13 H — D3 R3(I) — DPF IR 13 (I)H
DPD AMUX 12 H — D2 R2(I) — DPF IR 12 (I)H
D1 R1(I)
D0 R0(I)
CLR CLK
Φ1 Φ9

74174 E060 IR
DPC AMUX Φ9 H — D5 R5(I) — DPF IR Φ9 (I)H
DPC AMUX Φ8 H — D4 R4(I) — EF1 — DPF IR Φ8 (I)H
DPB AMUX Φ7 H — D3 R3(I) — DS2 — DPF IR Φ7 (I)H
DPB AMUX Φ6 H — D2 R2(I) — DS1 — DPF IR Φ6 (I)H
DPC AMUX 11 H — D1 R1(I) — DPF IR 11 (I)H
DPC AMUX 10 H — D0 R0(I) — DPF IR 10 (I)H
CLR CLK
Φ1 Φ9
DPF LOAD IR L

74174 E057 IR
DPA AMUX Φ3 H — D5 R5(I) — DPF IR Φ3 (I)H
DPA AMUX Φ2 H — D4 R4(I) — DU1 — DPF IR Φ2 (I)H
DPB AMUX Φ5 H — D3 R3(I) — DPF IR Φ5 (I)H
DPA AMUX ΦΦ H — D2 R2(I) — DU2 — DPF IR ΦΦ (I)H
DPA AMUX Φ1 H — D1 R1(I) — DT2 — DPF IR Φ1 (I)H
DPB AMUX Φ4 H — D0 R0(I) — DPF IR Φ4 (I)H
CLR CLK
CONH PROC INIT L
CONB IR CLOCK H — EV1
CONJ PROC CLOCK H
74ΦΦ E070: DPF LOAD IR L

23-AΦ2A1 E053 DOP AUX CTL
DPF IR 15 (I)H — A3
DPF IR 14 (I)H — A2
DPF IR 13 (I)H — A1
DPF IR 12 (I)H — AΦ
DPA RUN GND L — A4
M6(I) — CONF ALU S3 L
M5(I) — CONF ALU S2 L
M4(I) — CONF ALU S1 L
M3(I) — CONF ALU SΦ L
M2(I) — CONF ALU MODE H
M1(I) — CONF CIN H
MΦ(I) — R25 2K +5V — DPF C CLK L
M7(I) — R48 2K +5V — DPF DISAB VBIT ROM H
ENB

CONF AUX CONTROL L — FB1
74ΦΦ E073: Φ1 → Φ2 — DPF AUX CONTROL H

23-AΦ3A1 E061 SOP AUX CTL
DPF IR 10 (I)H — A2
DPF IR Φ9 (I)H — A1
DPF IR Φ8 (I)H — AΦ
DPF IR Φ7 (I)H — A3
DPF IR Φ6 (I)H — A4
MΦ(I) — CONF ALU S3 L
M1(I) — CONF ALU S2 L
M2(I) — CONF ALU S1 L
M3(I) — CONF ALU SΦ L
M4(I) — CONF ALU MODE H
M5(I) — CONF CIN H
M6(I) — DPF C CLK L
M7(I) — R28 2K +5V — DPF COP L
ENB

DPG CAL SOURCE L — Φ1
DPF AUX CONTROL H — Φ2
74ΦΦ E094: Φ3 → DPF SOP L

23-AΦ6A1 E068 SOP AUX CTL
DPF IR 10 (I)H — A2
DPF IR Φ9 (I)H — A3
DPF IR Φ8 (I)H — A4
DPF IR Φ7 (I)H — AΦ
DPF IR Φ6 (I)H — A1
M3(I) — R40 2K +5V — DPF CODE Φ L
M2(I) — R29 2K — DPF SET CARRY L
MΦ(I) — DPG BYTE L
M4(I) — CONG B MODE ΦΦ H
M7(I) — DPF DISAB VBIT ROM H
M1(I) — R30 2K — DPF ROTATE L
M5(I) — EU1 — CONG ROM ALEG Φ L
M6(I) — R41 2K — DPF CODE 1 L
ENB

74ΦΦ E063: 11 → 10 — DPF SET CARRY H
74ΦΦ E063: Φ9 → Φ8 — FS1 — DPF ROTATE H

DPF ROT DLY (I)H — 12
DPF ROT C DLY (I)H — 13
DPF SET C DLY (I)H — Φ9
74HΦ1 E092: 10 → Φ8
74HΦ1 E092: 11 → R5Φ +5V 2K

23-A12A1 E082 C+V BIT
MS(I) — Φ6 — DPF SET COUT L
74Φ6 E081: Φ9, 10 → Φ8 — DPF SET COUT H
DPF CODE 1 DEL (I)L — AΦ
DPF CODE Φ DEL (I)L — A1
DPF NEG DEL (I)H — A2
DPF BLEG 15 DEL (I)L — A4
DPF ALEG 15 DEL (I)L — A3
M7(I)
MΦ(I)
M6(I)
M3(I)
M2(I)
M1(I)
M6(I) — Φ7 — R51 2K +5V
ENB

74Φ4 E073: 3 → 4 — DPF SET V H

DPF DISAB VROM DEL (I)H — Φ1
DPF ROTC DEL (I)H — Φ2
74Φ6 E081: Φ3, Φ5
DPF NEG DEL (I)H
DPF ROT DEL (I)H — Φ4
74HΦ1 E092: Φ6

74174 E054
DPE SET Z H — D5 R5(I) — DPF ZERO DEL (I)H
DPE NEG H — D4 R4(I) — DPF NEG DEL (I)H
CONF AUX CONTROL L — D3 R3(I) — DPF AUX DEL (I)L
DPF C CLK L — D2 R2(I) — DPF C CLK DEL (I)H
DPF CODE 1 L — D1 R1(I) — DPF CODE 1 DEL (I)L
DPF CODE Φ L — D0 R0(I) — DPF CODE Φ DEL (I)L
CLR CLK
+5V R47 1K — DPF R47 H
Φ1 Φ9

74174 E093
DPD BLEG 15 L — D5 R5(I) — DPF BLEG 15 DEL (I)L
DPD ALEG 15 L — D4 R4(I) — DPF ALEG 15 DEL (I)L
DPF DISAB VBIT ROM H — D3 R3(I) — DPF DISAB VROM DEL (I)H
DPF ROTATE H — D2 R2(I) — DPF ROT DEL (I)H
DPF ROT COUT H — D1 R1(I) — DPF ROT C DEL (I)H
DPF SET CARRY H — D0 R0(I) — DPF SET C DEL (I)H
CLR CLK
DPE R59 H
DPA PROC CLOCK L
Φ1 Φ9

DPF IR 15 (I)H — Φ9
DPF IR 14 (I)H — 10
DPF IR 13 (I)H — 11
74ΦΦ E067: Φ8

REV J
SIZE CODE D CS NUMBER M7260-0-1

AUX ALA CONTROL

FIRST USED ON OPTION/MODEL	QTY.	DESCRIPTION	PART NO.	ITEM NO.
11/05		PARTS LIST		

UNLESS OTHERWISE SPECIFIED DIMENSION IN INCHES. TOLERANCES
DECIMALS: .XXX = .005, .XX = .02, .X = .1 — ANGLES: ±0° 30'
REMOVE BURRS AND BREAK SHARP CORNERS SURFACE QUALITY ✓
MATERIAL
FINISH

DRN. W.MAJOR 1/19/72
CHK'D 1/19/72
ENG. 1/19/72
PROJ. ENG. 4/12/72
PROD. 4/26/72
DATE 4/27/72
NEXT HIGHER ASSY. B-DD-KD11-B
SCALE
SHEET 8 OF

digital EQUIPMENT CORPORATION MAYNARD MASSACHUSETTS

TITLE: DATA PATHS

SIZE D | CODE CS | NUMBER M7260-0-1 | REV. J (DPF)
DIST.

REVISIONS: REV | CHANGE NO | CHK

DEC FORM NO DEC 1072-B

This drawing and specifications, herein, are the property of Digital Equipment Corporation and shall not be reproduced or copied or used in whole or in part as the basis for the manufacture or sale of items without written permission.

23-AØ5A1 EØ66

CONE BUT DESTINATION L DH1 — A4
DPF IR 12 (1)H — A3
DPF IR 13 (1)H — A2
DPF IR 14 (1)H — A1
DPF IR 15 (1)H — AØ
DPA RUN GND L — ENB

M2(1) Ø3 — DPG CAL SOURCE L
M6(1) Ø7 — EH1 DPG MOVE L
M3(1) Ø4 — EK1 DPG BYTE L
M4(1) Ø5 — DPG CMP+BIT L
M7(1) Ø9 — DPF CODE Ø L
M1(1) Ø2 — CONF ALU S0 L
MØ(1) Ø1 — CONF ALU S2 L
M5(1) Ø6 — EJ1 DPG DIS ALU S BITS H

+5V; R39 2K; R35 2K; R38 2K; R37 2K; R36 47K

23-AØ3A2 EØ59

DPF IR 15 (1)H — A7
DPF IR 1Ø (1)H — A4
DPF IR ØB (1)H — A6
DPF IR Ø9 (1)H — A5
DPE NEG (1)H — A2
DPE ZERO (1)H — AØ
DPE VBIT (1)H — A3
DPE COUT (1)H — A1
ENB1 — 14
ENBØ — 13
CONE BUT IR DECODE L
DPG CAL BRANCH L

MØ(1) — CONF MPC Ø4 L
M3(1) Ø9 — CONF MPC Ø3 L
M2(1) 1Ø — CONF MPC Ø2 L
M1(1) — CONF MPC Ø1 L

23-AIØA1 EØ71

CONE JMP OR JSR L EM2 — A4
DPG SWAB L — A3
DPG JMP L — A2
DPG JMPORJSR L — A1
DPG CAL DEST L — AØ
ENB

M7(1) Ø9 — EL1 CONF MPC ØØ L
MØ(1) Ø1 — ES1 CONF MPC Ø7 L
M1(1) Ø2 — FJ1 CONG CKOFF L
M2(1) Ø3 — EB1 CONF MPC Ø5 L
M3(1) Ø4 — EC1 CONF MPC Ø4 L
M4(1) Ø5 — ED1 CONF MPC Ø3 L
M5(1) Ø6 — ER1 CONF MPC Ø2 L
M6(1) Ø7 — EP1 CONF MPC Ø1 L

23-AØ4A1 EØ64

DPF IR Ø2 (1)H — A1
DPF IR Ø1 (1)H — A2
DPF IR ØØ (1)H — AØ
CONE BUT IR DECODE L DV2 — A3
DPG CC L — A4
ENB

+5V; R31 2K
M7(1) Ø9 — DV1 DPG WAIT L
M6(1) Ø7 — CONF MPC Ø7 L
M5(1) Ø6 — CONF MPC Ø6 L
M4(1) Ø5 — CONF MPC Ø5 L
M3(1) Ø4 — CONF MPC Ø4 L
M2(1) Ø3 — CONF MPC Ø3 L
M1(1) Ø2 — CONF MPC Ø2 L
MØ(1) Ø1 — CONF MPC Ø1 L

23-AØBA1 EØ69

DPF IR 15 (1)H — AØ
DPF IR ØB (1)H — A3
DPF IR Ø9 (1)H — A2
DPF IR 1Ø (1)H — A1
DPF IR 11 (1)H — A4
ENB

M4(1) Ø5 — FU2 DPG EMT L
M3(1) Ø4 — FU1 DPG TRAP L
MØ(1) Ø1 — EM1 DPG CAL DEST L
M1(1) Ø2 — DPG JMP OR JSR L
M5(1) Ø6 — DPG BYTE L
M2(1) Ø3 — DPG CAL BRANCH L
M7(1) Ø9 — DPG ODD BYTE=Ø L
M6(1) Ø7 — DPG S4 L

74ØØ EØ63: Ø5 → Ø6 DPG BYTE H; +5V
R71 2K; R72 2K; R42 2K; R43 2K; R44 2K; R49 1K; R27 1K

CONE ENAB UNARY L EN1

CONE BUT DESTINATION H EE1
DPF IR Ø3 (1)H
DPF IR Ø4 (1)H
DPF IR Ø5 (1)H
DPG CMP+BIT L
DPG JMP OR JSR L
DPF IR Ø7 (1)H
DPF IR Ø6 (1)H

74HØ1 EØ65: 12,13 → 11 CONF MPC Ø6 L
74HØ1 EØ65: 1Ø,Ø9 → Ø8 CONF MPC Ø1 L
74HØ1 EØ65: Ø2,Ø1 → Ø3 CONF MPC Ø2 L
74HØ1 EØ65: Ø4,Ø5 → Ø6 CONF MPC Ø3 L
7410 EØ67: Ø1,13,Ø2 → 12 FT2 DPG ENAB NON MOD H
7410 EØ67: Ø3,Ø5,Ø4 → Ø6 DPG S4 H
7427 EØ62: Ø3,Ø4,Ø5 → Ø6

7427 EØ62: 11,1Ø,Ø9 → Ø8; 7427 EØ62: 1,2,13 → 12
DPF IR 14 (1)H
DPF IR 13 (1)H
DPF IR 12 (1)H

23-A11A1 EØ74

DPF IR Ø3 (1)H — A2
DPF IR Ø4 (1)H — A1
DPF IR Ø5 (1)H — 1Ø
DPF IR Ø6 (1)H — A3
DPF IR Ø7 (1)H — A4
DPG ODD BYTE=Ø L — ENB

+5V; R52 2K; R53 2K; R32 2K; R33 2K; R45 2K
MØ(1) Ø1 — DPG JMP L
M1(1) Ø2 — DPG SWAB L
M3(1) Ø4 — DPG CC L
M7(1) Ø9 — DPG CC OR OPERATE L
M4(1) Ø5
M2(1) Ø3 — DPG JMP OR JSR L
M6(1) Ø7 — ES2 DPG RTS L
M5(1) Ø6 — DPG CAL DEST L

DPG CAL SOURCE L; CONE BUT IR DECODE L → 74Ø2 EØ79 Ø4
DPF IR Ø9 (1)H
DPF IR 1Ø (1)H
DPF IR 11 (1)H

74HØ1 EØ72: 13,12 → 11 CONF MPC Ø7 L
74HØ1 EØ72: 1Ø,Ø9 → Ø8 CONF MPC Ø1 L
74HØ1 EØ72: Ø4,Ø5 → Ø6 CONF MPC Ø2 L
74HØ1 EØ72: Ø2,Ø1 → Ø3 CONF MPC Ø3 L

IR DECODE

FIRST USED ON OPTION/MODEL	QTY.	DESCRIPTION	PART NO.	ITEM NO.
11/05		PARTS LIST		

UNLESS OTHERWISE SPECIFIED DIMENSION IN INCHES. TOLERANCES
DECIMALS: .XXX ± .005, .XX ± .02, .X ± .1 — ANGLES: ±0° 30'
REMOVE BURRS AND BREAK SHARP CORNERS SURFACE QUALITY ✓
MATERIAL —
FINISH —

DRN. W. MAJOR 2/22/72
CHKD. [signature] 4/2/72
ENG. [signature] 4/24/72
PROJ. ENG. [signature] 4/24/72
PROD. K. Peterson 4/27/72

digital EQUIPMENT CORPORATION MAYNARD, MASSACHUSETTS

TITLE: DATA PATHS
DP6

NEXT HIGHER ASSY. B-DD-KD11-B
SCALE —
SHEET 9 OF

SIZE	CODE	NUMBER	REV.
D	CS	M7260-0-1	J

DIST.

REVISIONS | REV | CHANGE NO | CHK

DEC FORM NO DRN 102-R

The drawings and specifications, hereto, are the property of Digital Equipment Corporation and shall not be reproduced or copied or used in whole or in part as the basis for the manufacture or sale of items without written permission.

CONJA ENABLE DATA H
CONJ CLR MSYN H FF2
74ØØ E088
DPH RDR ENB (I)H
74Ø2 E075
FP2 DPH CLEAR BUFF L
74Ø4 E073
FS CLK L FH1
+5V RG1 1K
FS CLK DISAB L FH2
RGØ 1K
74Ø13 E085
R73 47
R74 5ØØ
C38 1µF
DPA RUN GND L
+5V RG6 75Ø RG7
DPH SER IN H FN1
82
C37 .01µF
C36 .47µF
D1
D2
DPH SI-15 L FP1
RG5 5GØ 1/2W
-15V
+5V RG8 1K
FS SER IN H FM1
DPH MAINT (Ø)H
DPH MAINT (I)H
DPH SER O H
74ØØ E084
74ØØ E094
74Ø2 EØ8Ø
+15V EP2
R78 220 1/2W
THIS +5 USE ON E85 ONLY
+5V
D11 IN5231B
-15V DC FB2
D10 D9 D8 D7 D6
R34 10K
COND INIT H
DPA R26 H

74193 EØ17
D3 D2 D1 D0
R3(I) R2(I) R1(I) R0(I)
CRY BRW
CLR LD CUP CDN
DPH START H

UART EØ41
VCC RDA SWE RDE RCP SI
DA OR FER PER RD7 RD6 RD5 RD4 RD3 RD2 RD1 RDØ
SO TBMT COC
DPH DATA AVAIL H
DPH TBMT H
DB7 DB6 DB5 DB4 DB3 DB2 DB1 DBØ
DS TCP
CLR CS WBS WB1 WP DEV DSB
DPB AMUX Ø7 H
DPB AMUX Ø6 H
DPB AMUX Ø5 H
DPB AMUX Ø4 H
DPA AMUX Ø3 H
DPA AMUX Ø2 H
DPA AMUX Ø1 H
DPA AMUX ØØ H
CONA DATA STROBE L DE2

DPH BUSY (I)H
CONA ENAB RCD PSW H FE1
DPH TBMT H
CONA ENAB XMIT PSW H FD1
DPH RCD INT ENAB (I)H
DPH XMIT INT ENAB (I)H
DPH MAINT (I)H
74HØ1 EØ37
74HØ1 EØ26
74HØ1 EØ76
DPC ALEG 11 L
DPB ALEG Ø7 L
DPB ALEG Ø6 L
DPB ALEG Ø5 L
DPB ALEG Ø4 L
DPA ALEG Ø3 L
DPA ALEG Ø2 L
DPA ALEG Ø1 L
DPA ALEG ØØ L
CONA ENAB DATA H CN1
DF1 DPH SER O H

+5V 1.5K R55 R56 47Ø
Q2
C34 1ØØØpF
D4
D5
R57 12K 1/2W
R58 12K 1/2W
R54 75Ø 1W
-15V
FE2 DPH SER O L
FJ2 DPH SER O-15 L

SCL CONTROL

FIRST USED ON OPTION/MODEL	QTY.	DESCRIPTION	PART NO.	ITEM NO.
11/05		PARTS LIST		

UNLESS OTHERWISE SPECIFIED DIMENSION IN INCHES. TOLERANCES
DECIMALS .XXX ± .005 .XX ± .02 .X ± .1 ANGLES ± 0° 30'
REMOVE BURRS AND BREAK SHARP CORNERS SURFACE QUALITY ✓
MATERIAL
FINISH

	NAME	DATE
DRN.	W.MAJOR	2/1/72
CHK.		4/2/72
ENG.		4/24/72
PROJ. ENG.		4/24/72
PROD. ENG.	P.R. Peterson	4/27/72

digital EQUIPMENT CORPORATION MAYNARD MASSACHUSETTS

TITLE: DATA PATHS
DPH
NEXT HIGHER ASSY. B-DD-KDII-B
SIZE D CODE CS NUMBER M7260-0-1 REV. L
SCALE
SHEET 10 OF
DIST.

REVISIONS | REV. | CHANGE NO | CHK

DEC FORM NO DRD 102-B

M7260-0-1 REV L

This drawing and specifications, herein, are the property of Digital Equipment Corporation and shall not be reproduced or copied or used in whole or in part as the basis for the manufacture or sale of items without written permission.

BIRG PIN	SIGNAL NAME	BACKPLANE PIN
DD	CONSOLE DEP L	CM1
FF	CONSOLE START L	CM2
JJ	CONSOLE STOP L	CS1
LL	CONSOLE CONT L	CS2
NN	CONSOLE EXAM L	CT2
RR	CONSOLE LOAD L	CU2
TT	CONB RUN LAMP L	CU1

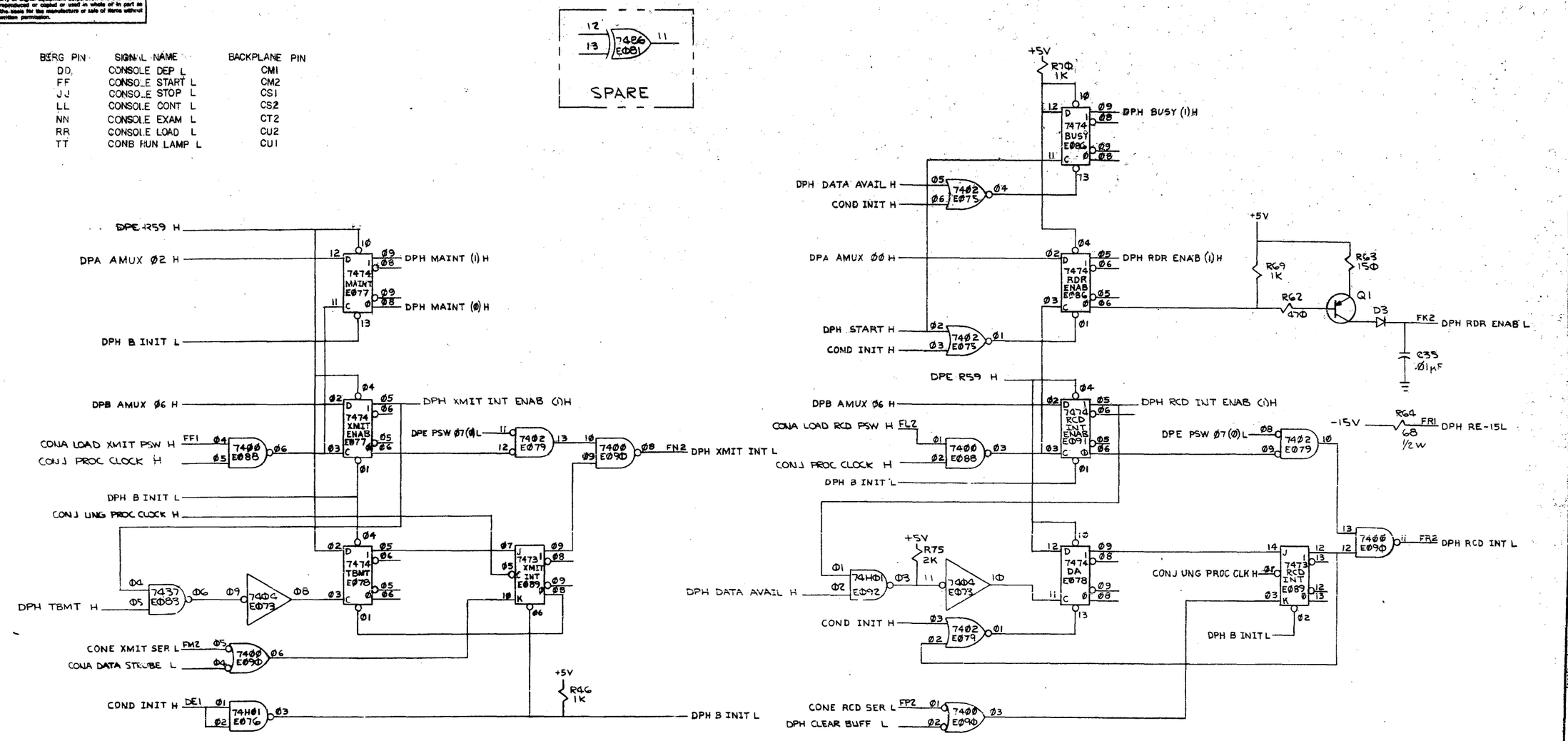

SCL CONTROL

FIRST USED ON OPTION/MODEL	QTY.	DESCRIPTION	PART NO.	ITEM NO.
11/Ø5		PARTS LIST		

UNLESS OTHERWISE SPECIFIED DIMENSION IN INCHES TOLERANCES

DECIMALS	ANGLES
.XXX = .005	±0° 30'
.XX = .02	
.X = .1	

REMOVE BURRS AND BREAK SHARP CORNERS SURFACE QUALITY ✓

MATERIAL

FINISH

DRN. R. Pudelka DATE 2-29-72
CHK. DATE 4/2/72
ENG. DATE 4/26/72
PROJ. ENG. DATE 4/26/72
PROD. R.K. Peterson DATE 4/27/72

NEXT HIGHER ASSY. B-DD-KD11-B

SCALE

SHEET 1 OF

digital EQUIPMENT CORPORATION MAYNARD MASSACHUSETTS

TITLE DATA PATHS (DPHI)

SIZE D CODE CS NUMBER M7260-Ø-1 REV. J

DIST.

REVISIONS CHK CHANGE NO. REV

DRAWING 40-522 15840

DEC FORM NO

This drawing and specifications, herein, are the property of Digital Equipment Corporation and shall not be reproduced or copied or used in whole or in part as the basis for the manufacture or sale of items without written permission.

THIS FACE SHEET CONTAINS THE FOLLOWING CHIP PART NUMBERS

PART NUMBER

23-A01A1

23-A02A1

23-A03A1

23-A04A1

23-A05A1

23-A06A1

23-A08A1

23-A10A1

23-A11A1

23-A12A1

23-A03A2

FIRST USED ON OPTION MODEL	QTY.	DESCRIPTION	PART NO.	ITEM NO.
KDII-B		PARTS LIST		

REVISIONS	REV.	CHANGE NO.	CHK

DRN. C. Teschner	DATE 5-8-72	digital EQUIPMENT CORPORATION MAYNARD, MASSACHUSETTS	
CHK'D. M. Tibbetts	DATE 5-15-72	TITLE DATA PATH ROM PATTERNS	
ENG. M. Tibbetts	DATE		
PROJ. ENG. M. Tibbetts	DATE		
PROD. [illegible]	DATE [illegible]		
NEXT HIGHER ASSEMBLY B-DD-KDII-B		SIZE K / CODE RL / NUMBER M726Ø-Ø-8	REV.
SCALE		SHEET 1 OF 15	DIST.

DEC FORM NO. DRB 109

```
                    /( =Y8 (PIN #9) DPA ALEG 02 L
                    */( =Y7 (PIN #7) DPA ALEG 03 L
                    **/( =Y6 (PIN #6) DPA ALEG 00 L
                    ***/( =Y5 (PIN #5) DPA ALEG 01 L
                    ****/( =Y4 (PIN #4) DPB ALEG 05 L
                    *****/( =Y3 (PIN #3) DBP ALEG 04 L
                    ******/( =Y2 (PIN #2) DPB ALEG 06 L
                    *******/( =Y1 (PIN #1) DPB ALEG 07 L
  OCTAL DECIMAL                 ********          OCTAL
ADDRESS ADDRESS    EDCBA        ********          DATA
   000      0      00000        11111111          377
   001      1      00001        01001110          116       K=207 SWR ADDRESS I.E. 177570=000207,BAR
   002      2      00010        01110011          163       K=64 RECVR, VECTOR
   003      3      00011        00001111          017       K=360 CONDITION CODE MASK (CCM=1)
   004      4      00100        10111011          273       K=30 EMT VECTOR
   005      5      00101        00111111          077       K=14 T BIT VECTOR
   006      6      00110        11111111          377
   007      7      00111        11111111          377
   010      8      01000        11111011          373       K=20 IOT VECTOR
   011      9      01001        00111011          073       K=34 TRAP VECTOR
   012     10      01010        11111111          377
   013     11      01011        11111111          377
   014     12      01100        10111111          277       K=10 RESERVED (ILLEGAL) INSTRUCTION VECTOR
   015     13      01101        01111111          177       K=4 BUS ERROR OR STACK OVERFLOW ERROR
   016     14      01110        11111111          377
   017     15      01111        11111111          377
   020     16      10000        01111011          173       K=24 PWR FAIL VECTOR
   021     17      10001        11111111          377
   022     18      10010        11111101          375       K=100 LCLK INT VECTOR
   023     19      10011        11111111          377
   024     20      10100        11111111          377
   025     21      10101        11111111          377
   026     22      10110        11111111          377
   027     23      10111        11111111          377
   030     24      11000        11111111          377
   031     25      11001        11111111          377
   032     26      11010        11111111          377
   033     27      11011        11111111          377
   034     28      11100        11111111          377
   035     29      11101        11110011          363       K=60 TRANSMIT VECTOR
   036     30      11110        11111111          377
   037     31      11111        11111111          377
                   *****
                   ****/( A(PIN #10) IS  CONG SP WRITE H
                   ***/( B(PIN #11) IS  CONG ROM SPA 00 H
                   **/( C(PIN #12) IS  CONG ROM SPA 01 H
                   */( D(PIN #13) IS  CONG ROM SPA 02 H
                   /( E(PIN #14) IS  CONG ROM SPA 03 H
```



```
                    /( =Y8 (PIN #9) DPF DISAB V BIT ROM H
                    */( =Y7 (PIN #7) CONF ALU S3 L
                    **/( =Y6 (PIN #6) CONF ALU S2 L
                    ***/( =Y5 (PIN #5) CONF ALU S1 L
                    ****/( =Y4 (PIN #4) CONF ALU S0 L
                    *****/( =Y3 (PIN #3) CONF ALU MODE H
                    ******/( =Y2 (PIN #2) CONF CIN H
                    *******/( =Y1 (PIN #1) DPF C CLK L
  OCTAL DECIMAL                 ********          OCTAL
ADDRESS ADDRESS    EDCBA        ********          DATA
   000      0      00000        11111111          377
   001      1      00001        10000101          205       MOV F=A
   002      2      00010        01001010          112       CMP F=A MINUS B MINUS 1
   003      3      00011        10001101          215       BIT F=AB
   004      4      00100        10111101          275       BIC F=A,BARB
   005      5      00101        10100101          245       BIS F=A+B
   006      6      00110        00110000          060       ADD F=A PLUS B
   007      7      00111        11111111          377       RI (RESERVED INSTRUCTION)
   010      8      01000        11111111          377       RI
   011      9      01001        10000101          205       MOV(B)
   012     10      01010        01001010          112       CMP(B)
   013     11      01011        10001101          215       BIT(B)
   014     12      01100        10111101          275       BIC(B)
   015     13      01101        10100101          245       BIS(B)
   016     14      01110        00110010          062       SUB F=A PLUS B
   017     15      01111        11111111          377       RI
   020     16      10000        00000000          000       NOT ACCESSED
   021     17      10001        00000000          000       MOV = NOT ACCESSED
   022     18      10010        00000000          000       CMP = NOT ACCESSED
   023     19      10011        00000000          000       BIT = NOT ACCESSED
   024     20      10100        00000000          000       BIC = NOT ACCESSED
   025     21      10101        00000000          000       BIS = NOT ACCESSED
   026     22      10110        00000000          000       ADD = NOT ACCESSED
   027     23      10111        00000000          000       RI = NOT ACCESSED
   030     24      11000        00000000          000       RI = NOT ACCESSED
   031     25      11001        00000000          000       MOV(B) = NOT ACCESSED
   032     26      11010        00000000          000       CMP(B) = NOT ACCESSED
   033     27      11011        00000000          000       BIT(B) = NOT ACCESSED
   034     28      11100        00000000          000       BIC(B) = NOT ACCESSED
   035     29      11101        00000000          000       BIS(B) = NOT ACCESSED
   036     30      11110        00000000          000       SUB = NOT ACCESSED
   037     31      11111        00000000          000       RI = NOT ACCESSED
                   *****
                   ****/( A(PIN #10) IS  DPF IR 12 (1)H
                   ***/( B(PIN #11) IS  DPF IR 13 (1)H
                   **/( C(PIN #12) IS  DPF IR 14 (1)H
                   */( D(PIN #13) IS  DPF IR 15 (1)H
                   /( E(PIN #14) IS  DPA RUN GND L
```

```
                        /( =Y8 (PIN #9) DPF COP L
                        */( =Y7 (PIN #7) DPF C CLK L
                        **/( =Y6 (PIN #6) CONF CIN H
                        ***/( =Y5 (PIN #5) CONF ALU MODE H
                        ****/( =Y4 (PIN #4) CONF ALU S0 L
                        *****/( =Y3 (PIN #3) CONF ALU S1 L
                        ******/( =Y2 (PIN #2) CONF ALU S2 L
                        *******/( =Y1 (PIN #1) CONF ALU S3 L
  OCTAL DECIMAL         ********        OCTAL
ADDRESS ADDRESS  EDCBA  ********        DATA
   000      0    00000  11111111        377
   001      1    00001  11111111        377
   002      2    00010  10011100        234     CLR ALUF=ZERO
   003      3    00011  10101001        251     NEG CIN ALUF=A MINUS B MINUS 1
   004      4    00100  10111111        277     ROR
   005      5    00101  11111111        377
   006      6    00110  11111111        377
   007      7    00111  11111111        377
   010      8    01000  11111111        377
   011      9    01001  11111111        377
   012     10    01010  11100000        340     INC CIN ALUF=A ARITH
   013     11    01011  00101111        057     SBC CIN ALUF=A MINUS 1
   014     12    01100  10110111        267     ASR
   015     13    01101  11111111        377
   016     14    01110  11111111        377
   017     15    01111  11111111        377
   020     16    10000  11111111        377
   021     17    10001  11111111        377
   022     18    10010  10010101        225     COM ALUF=NOT B
   023     19    10011  00000000        000     ADC CIN ALUF=A ARITH
   024     20    10100  10111011        273     ROL
   025     21    10101  11111111        377
   026     22    10110  11111111        377
   027     23    10111  11111111        377
   030     24    11000  10011010        232     SWAB NOT B CLOCK LOW
   031     25    11001  11111111        377
   032     26    11010  11001111        317     DEC CIN ALUF=A MINUS 1
   033     27    11011  10010000        220     TST ALUF=AL
   034     28    11100  10110011        263     ASL
   035     29    11101  11111111        377
   036     30    11110  11111111        377
   037     31    11111  11111111        377
                        *****
                        ****/( A(PIN #10) IS  DPF IR 08 (1)H
                        ***/( B(PIN #11) IS  DPR IR 09 (1)H
                        **/( C(PIN #12) IS  DPF IR 10 (1)H
                        */( D(PIN #13) IS  DPF IR 07 (1)H
                        /( E(PIN #14) IS  DPF IR 06 (1)H
```



```
                        /( =Y8 (PIN #9) DPG WAIT L
                        */( =Y7 (PIN #7) CONF MPC 07 L
                        **/( =Y6 (PIN #6) CONF MPC 06 L
                        ***/( =Y5 (PIN #5) CONF MPC 05 L
                        ****/( =Y4 (PIN #4) CONF MPC 04 L
                        *****/( =Y3 (PIN #3) CONF MPC 03 L
                        ******/( =Y2 (PIN #2) CONF MPC 02 L
                        *******/( =Y1 (PIN #1) CONF MPC 01 L
  OCTAL DECIMAL         ********        OCTAL
ADDRESS ADDRESS  EDCBA  ********        DATA
   000      0    00000  11001011        313     CC OPR
   001      1    00001  11001011        313     CC OPR
   002      2    00010  11001011        313     CC OPR
   003      3    00011  11001011        313     CC OPR
   004      4    00100  11001011        313     CC OPR
   005      5    00101  11001011        313     CC OPR
   006      6    00110  11001011        313     CC OPR
   007      7    00111  11001011        313     CC OPR
   010      8    01000  11111111        377     RI (RESERVED INSTRUCTION)
   011      9    01001  11111111        377     NOT ACCESSED FOR NOT IR DECODE
   012     10    01010  11111111        377     RI
   013     11    01011  11111111        377     RI
   014     12    01100  11111111        377     RI
   015     13    01101  11111111        377     RI
   016     14    01110  11111111        377     RI
   017     15    01111  11111111        377     RI
   020     16    10000  11101111        357     HALT,BUT IR DEC
   021     17    10001  01100110        146     WAIT,BUT IR DEC
   022     18    10010  10100010        242     IOT
   023     19    10011  10001000        210     RESET
   024     20    10100  10110100        264     RTI
   025     21    10101  11101101        355     BREAKPOINT TRAP DECODE
   026     22    10110  11111111        377     RI
   027     23    10111  11111111        377     RI
   030     24    11000  11111111        377     RI
   031     25    11001  01111111        177     WAIT,BUT IR DEC,BAR
   032     26    11010  11111111        377     RI
   033     27    11011  11111111        377     RI
   034     28    11100  11111111        377     RI
   035     29    11101  11111111        377     RI
   036     30    11110  11111111        377     RI
   037     31    11111  11111111        377     RI
                        *****
                        ****/( A(PIN #10) IS  DPF IR 00 (1)H
                        ***/( B(PIN #11) IS  DPF IR 02 (1)H
                        **/( C(PIN #12) IS  DPF IR 01 (1)H
                        */( D(PIN #13) IS  CONE BUT IR DECODE L
                        /( E(PIN #14) IS  DPG CC L
```

```
                        /( =Y8 (PIN #9) DPF CODE Ø L
                        */( =Y7 (PIN #7) DPG MOVE L
                        **/( =Y6 (PIN #6) DPG DIS ALU S BITS H
                        ***/( =Y5 (PIN #5) DPG CMP OR BIT L
                        ****/( =Y4 (PIN #4) DPG BYTE L
                        *****/( =Y3 (PIN #3) DPG CAL SOURCE L
                        ******/( =Y2 (PIN #2) CONF ALU S0 L
                        *******/( =Y1 (PIN #1) CONF ALU S2 L
  OCTAL  DECIMAL                *******          OCTAL
 ADDRESS ADDRESS    EDCBA      *******          DATA
    000       0     00000      11011111         337       BR/CC (BRANCH OR CC OPERATOR)
    001       1     00001      11011111         337       BR/CC
    002       2     00010      11011011         333       BIC
    003       3     00011      11010011         323       BIC(B)
    004       4     00100      11001011         313       CMP
    005       5     00101      11000011         303       CMP(B)
    006       6     00110      01011011         133       ADD
    007       7     00111      01111000         170       SUB DIS ALU BITS H
    010       8     01000      10011011         233       MOV
    011       9     01001      10010011         223       MOV(B)
    012      10     01010      11011011         333       BIS
    013      11     01011      11010011         323       BIS(B)
    014      12     01100      11001011         313       BIT
    015      13     01101      11000011         303       BIT(B)
    016      14     01110      11011111         337       RI TRAP
    017      15     01111      11011111         337       RI TRAP
    020      16     10000      11011111         337       BR/CC
    021      17     10001      11011111         337       BR/CC
    022      18     10010      11011011         333       BIC
    023      19     10011      11010011         323       BIC(B)
    024      20     10100      11001011         313       CMP
    025      21     10101      11000011         303       CMP(B)
    026      22     10110      01011011         133       ADD
    027      23     10111      01011011         133       ADD
    030      24     11000      10011011         233       MOV
    031      25     11001      10010011         223       MOV(B)
    032      26     11010      11011011         333       BIS
    033      27     11011      11010011         323       BIS(B)
    034      28     11100      11001011         313       BIT
    035      29     11101      11000011         303       BIT(B)
    036      30     11110      11011111         337       RI TRAP
    037      31     11111      11011111         337       RI TRAP
                    *****
                    ****/( A(PIN #10) IS  DPF IR 15 (1)H
                    ***/( B(PIN #11) IS  DPF IR 14 (1)H
                    **/( C(PIN #12) IS  DPF IR 13 (1)H
                    */( D(PIN #13) IS  DPF IR 12 (1)H
                    /( E(PIN #14) IS  CONE BUT DESTINATION L
```



```
                        /( =Y8 (PIN #9) DPF DISAB V BIT ROM H
                        */( =Y7 (PIN #7) DPF CODE 1 L
                        **/( =Y6 (PIN #6) CONG ROM ALEG Ø L
                        ***/( =Y5 (PIN #5) CONG 8 MODE ØØ H
                        ****/( =Y4 (PIN #4) DPF CODE Ø L
                        *****/( =Y3 (PIN #3) DPF SET CARRY L
                        ******/( =Y2 (PIN #2) DPF ROTATE L
                        *******/( =Y1 (PIN #1) DPG BYTE L
  OCTAL  DECIMAL                *******          OCTAL
 ADDRESS ADDRESS    EDCBA      *******          DATA
    000       0     00000      11111111         377
    001       1     00001      11111111         377
    002       2     00010      11111111         377
    003       3     00011      10110110         266       SWAB DISAB V BIT ROM
    004       4     00100      11110101         365       ROR
    005       5     00101      11110101         365       ASR
    006       6     00110      11100101         345       ROL
    007       7     00111      11100101         345       ASL
    010       8     01000      10110111         267       CLR
    011       9     01001      00110111         067       INC
    012      10     01010      11110011         363       COM
    013      11     01011      00111111         077       DEC
    014      12     01100      00000001         001       BCC
    015      13     01101      11111111         377
    016      14     01110      11111111         377
    017      15     01111      11111111         377
    020      16     10000      00000001         001       BMI
    021      17     10001      11111111         377
    022      18     10010      11111111         377
    023      19     10011      11111111         377
    024      20     10100      00000001         001       BVS
    025      21     10101      11111111         377
    026      22     10110      11111111         377
    027      23     10111      11111111         377
    030      24     11000      01011111         137       NEG
    031      25     11001      00111111         077       SBC
    032      26     11010      00110111         067       ADC
    033      27     11011      11110111         367       TST
    034      28     11100      11111111         377
    035      29     11101      11111111         377
    036      30     11110      11111111         377
    037      31     11111      11111111         377
                    *****
                    ****/( A(PIN #10) IS  DPF IR Ø7 (1)H
                    ***/( B(PIN #11) IS  DPF IR Ø6 (1)H
                    **/( C(PIN #12) IS  DPF IR 10 (1)H
                    */( D(PIN #13) IS  DPF IR Ø9 (1)H
                    /( E(PIN #14) IS  DPF IR Ø8 (1)H
```

```
                        /( =Y8 (PIN #9) DPG ODD BYTE =  0L
                        */( =Y7 (PIN #7) DPG 54 L
                        **/( =Y6 (PIN #6) DPG BYTE L
                        ***/( =Y5 (PIN #5) DPG EMT L
                        ****/( =Y4 (PIN #4) DPG TRAP L
                        *****/( =Y3 (PIN #3) DPG CAL BRANCH L
                        ******/( =Y2 (PIN #2) DPG JSR L
                        *******/( =Y1 (PIN #1) DPG CAL DEST L
  OCTAL DECIMAL                 ********        OCTAL
ADDRESS ADDRESS   EDCBA         ********        DATA
   000      0     00000        01111111        177
   001      1     00001        11111011        373     BPL
   002      2     00010        11111011        373     BGE
   003      3     00011        11111011        373     BVC
   004      4     00100        11111011        373     BNE
   005      5     00101        11111011        373     BHI
   006      6     00110        11111011        373     BGT
   007      7     00111        11111011        373     BCC
   010      8     01000        11111011        373     BR
   011      9     01001        11111011        373     BMI
   012     10     01010        11111011        373     BLT
   013     11     01011        11111011        373     BVS
   014     12     01100        11111011        373     BEQ
   015     13     01101        11111011        373     BLOS
   016     14     01110        11111011        373     BLE
   017     15     01111        11111011        373     BCS
   020     16     10000        11111100        374     JSR
   021     17     10001        11101111        357     EMT
   022     18     10010        11111110        376     SOP (CC) ROR/ROL/ASR/ASL
   023     19     10011        11011110        336     OPR (DST) ROR(B)/ROL(B)/ASR(B)/ASL(B)
   024     20     10100        11111110        376     SOP (CC) CLR/COM/INC/DEC
   025     21     10101        11011110        336     OPR(DST) CLR(B)/COM(B)/INC(B)/DEC(B)
   026     22     10110        11111111        377     RI RESERVED INST
   027     23     10111        11111111        377     RI RESERVED INST
   030     24     11000        11111100        374     JSR
   031     25     11001        11110111        367     TRAP
   032     26     11010        11111111        377     RI RESERVED INST
   033     27     11011        11111111        377     RI RESERVED INST
   034     28     11100        10111110        276     SOP NEG/ADC/SBC/TST
   035     29     11101        10011110        236     OPR(DST) NEG(B)/ADC(B)/SBC(B)/TST(B)
   036     30     11110        11111111        377     RI RESERVED INST
   037     31     11111        11111111        377     RI RESERVED INST
                        *****
                        ****/( A(PIN #10) IS  DPF IR 15 (1)H
                        ***/( B(PIN #11) IS  DPF IR 10 (1)H
                        **/( C(PIN #12) IS  DPF IR 09 (1)H
                        */( D(PIN #13) IS  DPF IR 08 (1)H
                        /( E(PIN #14) IS  DPF IR 11 (1)H
```



```
                        /( =Y8 (PIN #9) CONF MPC 00 L
                        */( =Y7 (PIN #7) CONF MPC 01 L
                        **/( =Y6 (PIN #6) CONF MPC 02 L
                        ***/( =Y5 (PIN #5) CONF MPC 03 L
                        ****/( =Y4 (PIN #4) CONF MPC 04 L
                        *****/( =Y3 (PIN #3) CONF MPC 05 L
                        ******/( =Y2 (PIN #2) CONG CKOFF L
                        *******/( =Y1 (PIN #1) CONF MPC 07 L
  OCTAL DECIMAL                 ********        OCTAL
ADDRESS ADDRESS   EDCBA         ********        DATA
   000      0     00000        11111111        377
   001      1     00001        11111111        377
   002      2     00010        11111111        377
   003      3     00011        11111111        377
   004      4     00100        11111111        377
   005      5     00101        11111111        377
   006      6     00110        11111111        377
   007      7     00111        11111111        377
   010      8     01000        11011111        337     JMP BADR TO J=1 @204
   011      9     01001        11111111        377
   012     10     01010        11011111        337     JMP BADR TO J=1 @204
   013     11     01011        11111111        377
   014     12     01100        10101111        257     JSR BADR TO J2=1 @ 212
   015     13     01101        11111111        377
   016     14     01110        11111111        377     NOT JMP OR JSR FALL THRU TO D1=2 @ 200
   017     15     01111        11111111        377
   020     16     10000        11111111        377
   021     17     10001        11111111        377
   022     18     10010        11111111        377
   023     19     10011        11111111        377
   024     20     10100        11111111        377
   025     21     10101        11111111        377
   026     22     10110        11010111        327     SWAB BADR 024 INOR NEXT
   027     23     10111        11111111        377
   030     24     11000        01101111        157     JMP BADR 011 INOR NEXT
   031     25     11001        11111111        377
   032     26     11010        01101111        157     JMP BADR 011 INOR NEXT
   033     27     11011        11111111        377
   034     28     11100        01101111        157     JSR BADR 011 INOR NEXT
   035     29     11101        11111111        377
   036     30     11110        11101110        356     SOP BADR 210 INOR NXT
   037     31     11111        11110101        365     UNARY AND NOT JMP,JSR,SWAB
                        *****
                        ****/( A(PIN #10) IS  DPG CAL DEST L
                        ***/( B(PIN #11) IS  DPG JMP L OR JSR L
                        **/( C(PIN #12) IS  DPG JMP L
                        */( D(PIN #13) IS  DPG SWAB L
                        /( E(PIN #14) IS  CONG JMP OR JSR L
```

```
                    /( =Y8 (PIN #9) DPG CC OR OPERATE L
                    */( =Y7 (PIN #7) DPG RTS L
                    **/( =Y6 (PIN #6) DPG CAL DEST L
                    ***/( =Y5 (PIN #5)
                    ****/( =Y4 (PIN #4) DPG CC L
                    *****/( =Y3 (PIN #3) DPG JMP L OR JSR L
                    ******/( =Y2 (PIN #2) DPG SWAB L
                    *******/( =Y1 (PIN #1) DPG JMP L
  OCTAL DECIMAL             ********        OCTAL
ADDRESS ADDRESS   EDCBA     ********        DATA
   000      0     00000    01111111        177     OPR(HALT/WAIT/RTI/BK/IOT/TR)
   001      1     00001    11111111        377     RI
   002      2     00010    11111111        377     RI
   003      3     00011    11111111        377     RI
   004      4     00100    11111111        377     RI
   005      5     00101    11111111        377     RI
   006      6     00110    11111111        377     RI
   007      7     00111    11111111        377     RI
   010      8     01000    11011010        332     JMP MODE 0
   011      9     01001    11011010        332     JMP MODE 4
   012     10     01010    11011010        332     JMP MODE 2
   013     11     01011    11011010        332     JMP MODE 6
   014     12     01100    11011010        332     JMP MODE 1
   015     13     01101    11011010        332     JMP MODE 5
   016     14     01110    11011010        332     JMP MODE 3
   017     15     01111    11011010        332     JMP MODE 7
   020     16     10000    10111111        277     RTS NOT DPG CC OR OPR L
   021     17     10001    01110111        167     CC OPR 240
   022     18     10010    11111111        377     RI
   023     19     10011    01110111        167     CC OPR 260
   024     20     10100    11111111        377     RI
   025     21     10101    01110111        167     CC OPR 240
   026     22     10110    11111111        377     RI
   027     23     10111    01110111        167     CC OPR 260
   030     24     11000    11011101        335     SWAB MODE 0
   031     25     11001    11011101        335     SWAB MODE 4
   032     26     11010    11011101        335     SWAB MODE 2
   033     27     11011    11011101        335     SWAB MODE 6
   034     28     11100    11011101        335     SWAB MODE 1
   035     29     11101    11011101        335     SWAB MODE 5
   036     30     11110    11011101        335     SWAB MODE 3
   037     31     11111    11011101        335     SWAB MODE 7
                  *****
                  ****/( A(PIN #10) IS  DPF IR 05 (1)H
                  ***/( B(PIN #11) IS  DPF IR 04 (1)H
                  **/( C(PIN #12) IS  DPF IR 03 (1)H
                  */( D(PIN #13) IS  DPF IR 06 (1)H
                  /( E(PIN #14) IS  DPF IR 07 (1)H
```



```
                    /( =Y8 (PIN #9)
                    */( =Y7 (PIN #7) DPF SET V L
                    **/( =Y6 (PIN #6) DPF SET COUT L
                    ***/( =Y5 (PIN #5)
                    ****/( =Y4 (PIN #4)
                    *****/( =Y3 (PIN #3)
                    ******/( =Y2 (PIN #2)
                    *******/( =Y1 (PIN #1)
  OCTAL DECIMAL             ********        OCTAL
ADDRESS ADDRESS   EDCBA     ********        DATA
   000      0     00000    11011111        337     INC OR ADC
   001      1     00001    10011111        237     ADD OR SUB
   002      2     00010    10111111        277     DEC OR SBC
   003      3     00011    11111111        377     CMP OR NEG
   004      4     00100    11111111        377     INC OR ADC
   005      5     00101    11011111        337     ADD OR SUB
   006      6     00110    11111111        377     DEC OR SBC
   007      7     00111    11011111        337     CMP OR NEG
   010      8     01000    11111111        377     INC OR ADC
   011      9     01001    11011111        337     ADD OR SUB
   012     10     01010    11111111        377     DEC OR SBC
   013     11     01011    11011111        337     CMP OR NEG
   014     12     01100    10111111        277     INC OR ADC
   015     13     01101    11111111        377     ADD OR SUB
   016     14     01110    11011111        337     DEC OR SBC
   017     15     01111    10011111        237     CMP OR NEG
   020     16     10000    11011111        337     INC OR ADC
   021     17     10001    11011111        337     ADD OR SUB
   022     18     10010    10111111        277     DEC OR SBC
   023     19     10011    10111111        277     CMP OR NEG
   024     20     10100    11111111        377     INC OR ADC
   025     21     10101    11111111        377     ADD OR SUB
   026     22     10110    11111111        377     DEC OR SBC
   027     23     10111    11111111        377     CMP OR NEG
   030     24     11000    11111111        377     INC OR ADC
   031     25     11001    11111111        377     ADD OR SUB
   032     26     11010    11111111        377     DEC OR SBC
   033     27     11011    11111111        377     CMP OR NEG
   034     28     11100    10111111        277     INC OR ADC
   035     29     11101    10111111        277     ADD OR SUB
   036     30     11110    11011111        337     DEC OR SBC
   037     31     11111    11011111        337     CMP OR NEG
                  *****
                  ****/( A(PIN #10) IS  DPF CODE 1 DEL (1)L
                  ***/( B(PIN #11) IS  DPF CODE 0 DEL (1)L
                  **/( C(PIN #12) IS  DPE NEG DEL (1)H
                  */( D(PIN #13) IS  DPD ALEG 15 DEL (1)L
                  /( E(PIN #14) IS  DPD BLEG 15 DEL (1)L
```

```
                                /( =Y4 (PIN # 9) CONF MPC Ø3 L
                                +/( =Y3 (PIN #10) CONF MPC Ø2 L
                                ++/( =Y2 (PIN #11) CONF MPC Ø1 L
                                +++/( =Y1 (PIN #12) CONF MPC Ø4 L
  OCTAL DECIMAL                 ++++          OCTAL
ADDRESS ADDRESS   HGFEDCBA      ++++          DATA
    000       0   00000000      1111          017
    001       1   00000001      1111          017
    002       2   00000010      1111          017
    003       3   00000011      1111          017
    004       4   00000100      1111          017
    005       5   00000101      1111          017
    006       6   00000110      1111          017
    007       7   00000111      1111          017
    010       8   00001000      1111          017
    011       9   00001001      1111          017
    012      10   00001010      1111          017
    013      11   00001011      1111          017
    014      12   00001100      1111          017
    015      13   00001101      1111          017       NOT ACCESSED
    016      14   00001110      1111          017
    017      15   00001111      1111          017       ************
    020      16   00010000      0011          003
    021      17   00010001      0011          003
    022      18   00010010      0011          003
    023      19   00010011      0011          003
    024      20   00010100      0101          005
    025      21   00010101      0101          005
    026      22   00010110      0101          005
    027      23   00010111      0101          005
    030      24   00011000      0101          005
    031      25   00011001      0101          005
    032      26   00011010      0101          005
    033      27   00011011      0101          005
    034      28   00011100      0011          003
    035      29   00011101      0011          003       BGE
    036      30   00011110      0011          003
    037      31   00011111      0011          003       ************

    040      32   00100000      0011          003
    041      33   00100001      0101          005
    042      34   00100010      0011          003
    043      35   00100011      0101          005
    044      36   00100100      0011          003
    045      37   00100101      0101          005
    046      38   00100110      0011          003
    047      39   00100111      0101          005
    050      40   00101000      0011          003
    051      41   00101001      0101          005
    052      42   00101010      0011          003
    053      43   00101011      0101          005
    054      44   00101100      0011          003
    055      45   00101101      0101          005       BNE
    056      46   00101110      0011          003
    057      47   00101111      0101          005       ************
    060      48   00110000      0011          003
    061      49   00110001      0101          005
    062      50   00110010      0011          003
    063      51   00110011      0101          005
    064      52   00110100      0101          005
    065      53   00110101      0101          005
    066      54   00110110      0101          005
    067      55   00110111      0101          005
    070      56   00111000      0101          005
    071      57   00111001      0101          005
    072      58   00111010      0101          005
    073      59   00111011      0101          005
    074      60   00111100      0011          003
    075      61   00111101      0101          005       BGT
    076      62   00111110      0011          003
    077      63   00111111      0101          005       ************
                 ++++++++
                 +++++++/( A(PIN #Ø5) IS  DPE CC ZERO (1)H
                 ++++++/( B(PIN #Ø6) IS  DPE CC COUT (1)H
                 +++++/( C(PIN #Ø7) IS  DPE CC NEG (1)H
                 ++++/( D(PIN #Ø4) IS  DPE CC VBIT (1)H
                 +++/( E(PIN #Ø3) IS  DPF IR 10 (1)H
                 ++/( F(PIN #Ø2) IS  DPF IR Ø9 (1)H
                 +/( G(PIN #Ø1) IS  DPF IR Ø8 (1)H
                 /( H(PIN #15) IS  DPF IR 15 (1)H
```

```
                                /( =Y4 (PIN # 9) CONF MPC 03 L
                                +/( =Y3 (PIN #10) CONF MPC 02 L
                                ++/( =Y2 (PIN #11) CONF MPC 01 L
                                +++/( =Y1 (PIN #12) CONF MPC 04 L
  OCTAL DECIMAL                 ++++          OCTAL
ADDRESS ADDRESS    HGFEDCBA     ++++          DATA
    100      64    01000000     0011          003
    101      65    01000001     0011          003
    102      66    01000010     0011          003
    103      67    01000011     0011          003
    104      68    01000100     0011          003
    105      69    01000101     0011          003
    106      70    01000110     0011          003
    107      71    01000111     0011          003
    110      72    01001000     0011          003
    111      73    01001001     0011          003
    112      74    01001010     0011          003
    113      75    01001011     0011          003
    114      76    01001100     0011          003
    115      77    01001101     0011          003       BR (ALWAYS)
    116      78    01001110     0011          003
    117      79    01001111     0011          003       ************
    120      80    01010000     0101          005
    121      81    01010001     0101          005
    122      82    01010010     0101          005
    123      83    01010011     0101          005
    124      84    01010100     0011          003
    125      85    01010101     0011          003
    126      86    01010110     0011          003
    127      87    01010111     0011          003
    130      88    01011000     0011          003
    131      89    01011001     0011          003
    132      90    01011010     0011          003
    133      91    01011011     0011          003
    134      92    01011100     0101          005
    135      93    01011101     0101          005       BLT
    136      94    01011110     0101          005
    137      95    01011111     0101          005       ************

    140      96    01100000     0101          005
    141      97    01100001     0011          003
    142      98    01100010     0101          005
    143      99    01100011     0011          003
    144     100    01100100     0101          005
    145     101    01100101     0011          003
    146     102    01100110     0101          005
    147     103    01100111     0011          003
    150     104    01101000     0101          005
    151     105    01101001     0011          003
    152     106    01101010     0101          005
    153     107    01101011     0011          003
    154     108    01101100     0101          005
    155     109    01101101     0011          003       BEQ
    156     110    01101110     0101          005
    157     111    01101111     0011          003       ************
    160     112    01110000     0101          005
    161     113    01110001     0011          003
    162     114    01110010     0101          005
    163     115    01110011     0011          003
    164     116    01110100     0011          003
    165     117    01110101     0011          003
    166     118    01110110     0011          003
    167     119    01110111     0011          003
    170     120    01111000     0011          003
    171     121    01111001     0011          003
    172     122    01111010     0011          003
    173     123    01111011     0011          003
    174     124    01111100     0101          005
    175     125    01111101     0011          003       BLE
    176     126    01111110     0101          005
    177     127    01111111     0011          003       ************
                   ++++++++
                   ++++++++/( A(PIN #05) IS  DPE CC ZERO (1)H
                   +++++++/( B(PIN #06) IS  DPE CC COUT (1)H
                   ++++++/( C(PIN #07) IS  DPE CC NEG (1)H
                   +++++/( D(PIN #04) IS  DPE CC VBIT (1)H
                   ++++/( E(PIN #03) IS  DPF IR 10 (1)H
                   +++/( F(PIN #02) IS  DPF IR 09 (1)H
                   ++/( G(PIN #01) IS  DPF IR 08 (1)H
                   +/( H(PIN #15) IS  DPF IR 15 (1)H
```

```
                                /( =Y4 (PIN # 9) CONF MPC 03 L
                                */( =Y3 (PIN #10) CONF MPC 02 L
                                **/( =Y2 (PIN #11) CONF MPC 01 L
                                ***/( =Y1 (PIN #12) CONF MPC 04 L
  OCTAL DECIMAL                 ****          OCTAL
ADDRESS ADDRESS    HGFEDCBA     ****          DATA
    200     128    10000000     0011          003
    201     129    10000001     0011          003
    202     130    10000010     0011          003
    203     131    10000011     0011          003
    204     132    10000100     0101          005
    205     133    10000101     0101          005
    206     134    10000110     0101          005
    207     135    10000111     0101          005
    210     136    10001000     0011          003
    211     137    10001001     0011          003
    212     138    10001010     0011          003
    213     139    10001011     0011          003
    214     140    10001100     0101          005
    215     141    10001101     0101          005       BPL
    216     142    10001110     0101          005
    217     143    10001111     0101          005       ************
    220     144    10010000     0011          003
    221     145    10010001     0011          003
    222     146    10010010     0011          003
    223     147    10010011     0011          003
    224     148    10010100     0011          003
    225     149    10010101     0011          003
    226     150    10010110     0011          003
    227     151    10010111     0011          003
    230     152    10011000     0101          005
    231     153    10011001     0101          005
    232     154    10011010     0101          005
    233     155    10011011     0101          005
    234     156    10011100     0101          005
    235     157    10011101     0101          005       BVC
    236     158    10011110     0101          005
    237     159    10011111     0101          005       ************

    240     160    10100000     0011          003
    241     161    10100001     0101          005
    242     162    10100010     0101          005
    243     163    10100011     0101          005
    244     164    10100100     0011          003
    245     165    10100101     0101          005
    246     166    10100110     0101          005
    247     167    10100111     0101          005
    250     168    10101000     0011          003
    251     169    10101001     0101          005
    252     170    10101010     0101          005
    253     171    10101011     0101          005
    254     172    10101100     0011          003
    255     173    10101101     0101          005       BHI
    256     174    10101110     0101          005
    257     175    10101111     0101          005       ************
    260     176    10110000     0011          003
    261     177    10110001     0011          003
    262     178    10110010     0101          005
    263     179    10110011     0101          005
    264     180    10110100     0011          003
    265     181    10110101     0011          003
    266     182    10110110     0101          005
    267     183    10110111     0101          005
    270     184    10111000     0011          003
    271     185    10111001     0011          003
    272     186    10111010     0101          005
    273     187    10111011     0101          005
    274     188    10111100     0011          003
    275     189    10111101     0011          003       BCC
    276     190    10111110     0101          005
    277     191    10111111     0101          005       ************
                   ********
                   ********/( A(PIN #05) IS  DPE CC ZERO (1)H
                   *******/( B(PIN #06) IS  DPE CC COUT (1)H
                   ******/( C(PIN #07) IS  DPE CC NEG (1)H
                   *****/( D(PIN #04) IS  DPE CC VBIT (1)H
                   ****/( E(PIN #03) IS  DPF IR 10 (1)H
                   ***/( F(PIN #02) IS  DPF IR 09 (1)H
                   **/( G(PIN #01) IS  DPF IR 08 (1)H
                   */( H(PIN #15) IS  DPF IR 15 (1)H
```

```
                                /( =Y4 (PIN # 9) CONF MPC 03 L
                                */( =Y3 (PIN #10) CONF MPC 02 L
                                **/( =Y2 (PIN #11) CONF MPC 01 L
                                ***/( =Y1 (PIN #12) CONF MPC 04 L
  OCTAL DECIMAL                 ****          OCTAL
ADDRESS ADDRESS   HGFEDCBA      ****          DATA
    300     192   11000000      0101          005
    301     193   11000001      0101          005
    302     194   11000010      0101          005
    303     195   11000011      0101          005
    304     196   11000100      0011          003
    305     197   11000101      0011          003
    306     198   11000110      0011          003
    307     199   11000111      0011          003
    310     200   11001000      0101          005
    311     201   11001001      0101          005
    312     202   11001010      0101          005
    313     203   11001011      0101          005
    314     204   11001100      0011          003
    315     205   11001101      0011          003       BMI
    316     206   11001110      0011          003
    317     207   11001111      0011          003       ************
    320     208   11010000      0101          005
    321     209   11010001      0101          005
    322     210   11010010      0101          005
    323     211   11010011      0101          005
    324     212   11010100      0101          005
    325     213   11010101      0101          005
    326     214   11010110      0101          005
    327     215   11010111      0101          005
    330     216   11011000      0011          003
    331     217   11011001      0011          003
    332     218   11011010      0011          003
    333     219   11011011      0011          003
    334     220   11011100      0011          003
    335     221   11011101      0011          003       BVS
    336     222   11011110      0011          003
    337     223   11011111      0011          003       ************

    340     224   11100000      0101          005
    341     225   11100001      0011          003
    342     226   11100010      0011          003
    343     227   11100011      0011          003
    344     228   11100100      0101          005
    345     229   11100101      0011          003
    346     230   11100110      0011          003
    347     231   11100111      0011          003
    350     232   11101000      0101          005
    351     233   11101001      0011          003
    352     234   11101010      0011          003
    353     235   11101011      0011          003
    354     236   11101100      0101          005
    355     237   11101101      0011          003       BLOS
    356     238   11101110      0011          003
    357     239   11101111      0011          003       ************
    360     240   11110000      0101          005
    361     241   11110001      0101          005
    362     242   11110010      0011          003
    363     243   11110011      0011          003
    364     244   11110100      0101          005
    365     245   11110101      0101          005
    366     246   11110110      0011          003
    367     247   11110111      0011          003
    370     248   11111000      0101          005
    371     249   11111001      0101          005
    372     250   11111010      0011          003
    373     251   11111011      0011          003
    374     252   11111100      0101          005
    375     253   11111101      0101          005       BCS
    376     254   11111110      0011          003
    377     255   11111111      0011          003       ************
                  ********
                  *******/( A(PIN #05) IS  DPE CC ZERO (1)H
                  ******/( B(PIN #06) IS  DPE CC COUT (1)H
                  *****/( C(PIN #07) IS  DPE CC NEG (1)H
                  ****/( D(PIN #04) IS  DPE CC VBIT (1)H
                  ***/( E(PIN #03) IS  DPF IR 10 (1)H
                  **/( F(PIN #02) IS  DPF IR 09 (1)H
                  */( G(PIN #01) IS  DPF IR 08 (1)H
                  /( H(PIN #15) IS  DPF IR 15 (1)H
```

PAGE REVISION CONTROL SHEET

SH NO	PAGE REVISIONS	REMARKS
1	H J K L M N	*ETCH REV'D NOT TO BE USED PER ORDER D.E.
2	H J K L M M	
3	H H H H H H	
4	H H H H H H	
5	H H J J J J	
6	H H J J J K	
7	H K J J J J	
8	H P H H H H	
9	H H J J J J	
10	H J J K L L	
11	H H J K K K	
12	H H J J K K	
13	H H J J K K	
14	H H H H H H	

ECO NO.	ETCH REV
5	C
6	C
7	E*
8	E
9	E
10	E

FIRST USED ON OPTION/MODEL

This document contains confidential proprietary information of DEC. This information shall not be disclosed to persons outside the employ of DEC, except by DEC personnel so authorized by DEC, and only for use by such other persons in the design, production or manufacture of products for DEC.
Copyright © 1972 Digital Equipment Corporation

		DATE
DRN.		8/16/72
CHK'D.	M.T. Tolla	8/21/72
ENG.		8/17/72
PROJ. ENG.		8/17/72
PROD.	M.T. Tolla	8/21/72

digital EQUIPMENT CORPORATION
MAYNARD, MASSACHUSETTS

TITLE CONTROL LOGIC AND MICROPROGRAM

NEXT HIGHER ASSY.

SCALE

SHEET 1 OF 14

SIZE	CODE	NUMBER	REV.
B	CS	M7261-0-1	N

DIST.

NOTE:
1. UNLESS OTHERWISE NOTED: RESISTANCE IS IN OHMS, CAPACITANCE IS IN PICOFARADS.

1	E100	IC IM5600	23-A14A1	60
1	E107	IC IM5603	23-A14A2	59
1	E106	IC IM5603	23-A13A2	58
1	E105	IC IM5603	23-A12A2	57
1	E104	IC IM5603	23-A11A2	56
1	E103	IC IM5603	23-A10A2	55
1	E101	IC IM5603	23-A09A2	54
1	E96	IC IM5603	23-A16A2	53
1	E95	IC IM5603	23-A17A2	52
1	E94	IC IM5603	23-A15A2	51
1	E98	IC IM5603	23-A05A2	50
1	E92	IC IM5603	23-A04A2	49
1	E90	IC IM5600	23-A13A1	48
1	E69	IC IM5600	23-A09A1	47
1	E68	IC IM5600	23-A07A1	46
1	E30	IC IM5603	23-A02A2	45
1	E12	IC IM5603	23-A01A2	44
1	R86	RES 10K 1/4W, 5%	1300479	43
5	R21,R22,R28,R29,R87	RES 30K 1/4W, 5%	1302394	42
1	R10	RES 1K 1/2W, 5%, POT	1309143-0074	41
1	R6	RES 5.6K 1/4W, 5%	1301874	40
48	R3,5,12-18,20,24,25,27,31-40,42,43,45-50,56,58,60-65,79,81-83,107-109,57	RES 2K 1/4 W, 5%	1302366	39
41	R2,7,41,84,51-54,59,66-78,80,85,91-106,110,	RES 470 1/4W 5%	1300316	38
9	R1,R89,R90,R11,R19,R23,R30,R55,R88,	RES 1K 1/4W 5%	1300365	37
1	C110	CAP 1000 PF D.M.	1000042	36
1	E78	IC DEC 74154	1909701	35
2	E56, E57	IC DEC 74153	1909937	34
6	E46,E47,E48,E88	IC DEC 74174	1910652	33
4	E9,E25,E71,E82	IC DEC 9602	1910751	32
6	E5,E11,E15,E21,E91,E102	IC DEC 74175	1910651	31
3	E61, E77, E98	IC DEC 7405	1909930	30
3	E63, E65, E74	IC DEC 7427	1910878	29
3	E54, E55, E108	IC DEC 74H40	1905586	28
2	E41, E45	IC DEC 7410	1905576	27
1	E40	IC DEC 7437	1910091	26
2	E39, E59	IC DEC 7430	1905578	25
5	E99, E70 E81, E86, E89,	IC DEC 74H01	1909849	24
3	E23, E79, E84	IC DEC 7400	1909686	23
2	E22, E42	IC DEC 7420	1905577	22
1	E19	IC DEC 7413	1909989	21
9	E15,E34,E35,E36,E44,E72, E80,E85,E97	IC DEC 7474	1905547	20
14	E16,E26,E31,E32,E49,E51,E53,E62,E66,E67,E75,E76,E33,E87	IC DEC 7402	1909004	19
1	E14	IC DEC 8815	1909713	18
7	E8,E17,E33,E43,E50,E60,E73	IC DEC 7473	1905587	17
7	E6, E7, E24, E52 E58, E64 E27	IC DEC 7400	1905575	16
8	E2,E3,E13,E20,E28,E29,E37,E38	IC DEC 8881	1909705	15
3	E1, E4 E10	IC DEC 386	1909685	14
4	D1 THRU D4	DIODE D664	1100114	13
1	C115	CAP 120 PFD D.M.	1000018	12
1	C121	CAP 2.2 MFD	1002627	11
5	C116 THRU C120	CAP 6.8 MFD	1005306	10
2	C111, C113	CAP .68 MFD	1009964	9
1	C109	CAP 2200 PFD DISC	1000055	8
72	C1 THRU C72	CAP .01 MFD 1000V, 20% DISC	1001610	7
12		EYELET	9006732	6
1		HANDLE, MODULE	EPS#2107112	5
1		ETCHED CIRCUIT BOARD	5009745	4
REF		MODULE ECO HISTORY	B-MH-M7261-0-6	3
REF		ASSY/DRILL HOLE LAYOUT	E-AH-M7261-0-5	2
REF		X-Y COORDINATE HOLE LOCATION	K-CO-M7261-0-0	1
QTY	REF DESIGNATION	DESCRIPTION	PART NO.	ITEM NO.

PARTS LIST

1	C112	CAP 15MFD 20V 10% STANT	1009812
1	C119	CAP 18MFD 20V 10% STANT	1009813
1	R26	RES. 330 1/4W 5%	1300295

61 ETCH BOARD REV E

9602	8	16		
74175	8	16		
74174	8	16		
74154	12	24		
74153	8	16		
5603	8	16		
5600	8	16		
IC TYPE	GND	+5V		

GND AND 5V ARE USUALLY PIN 7 AND 14 RESPECTIVELY EXCEPTIONS ARE STATED ABOVE

IC PIN LOCATIONS

ITEM NO.	AWG	FROM PT	TO PT

JUMPER LIST

D664	IN 3600
DEC NO. EIA NO.	DEC NO. EIA NO.

SEMICONDUCTOR CONVERSION CHART

AA2, BA2, CA2, DA2, FA2

AC2, AT1, BC2, BT1, CC2, CT1, DC2, ET1, FC2, FT1

C1 THRU C72 .01 MFD

C112, C116 THRU C120 6.8 MFD

+5V

GND

AB2, AC2, AP1, AV2, BB2, BD1, BE1, BT1, BV2, CC2, C7, DC2, ET1, FC2, FT1

843 FBS

569 REF.

B-DD-KD11-0

M7261-0-1

CONTROL LOGIC & MICROPROGRAM

EQUIPMENT CORPORATION

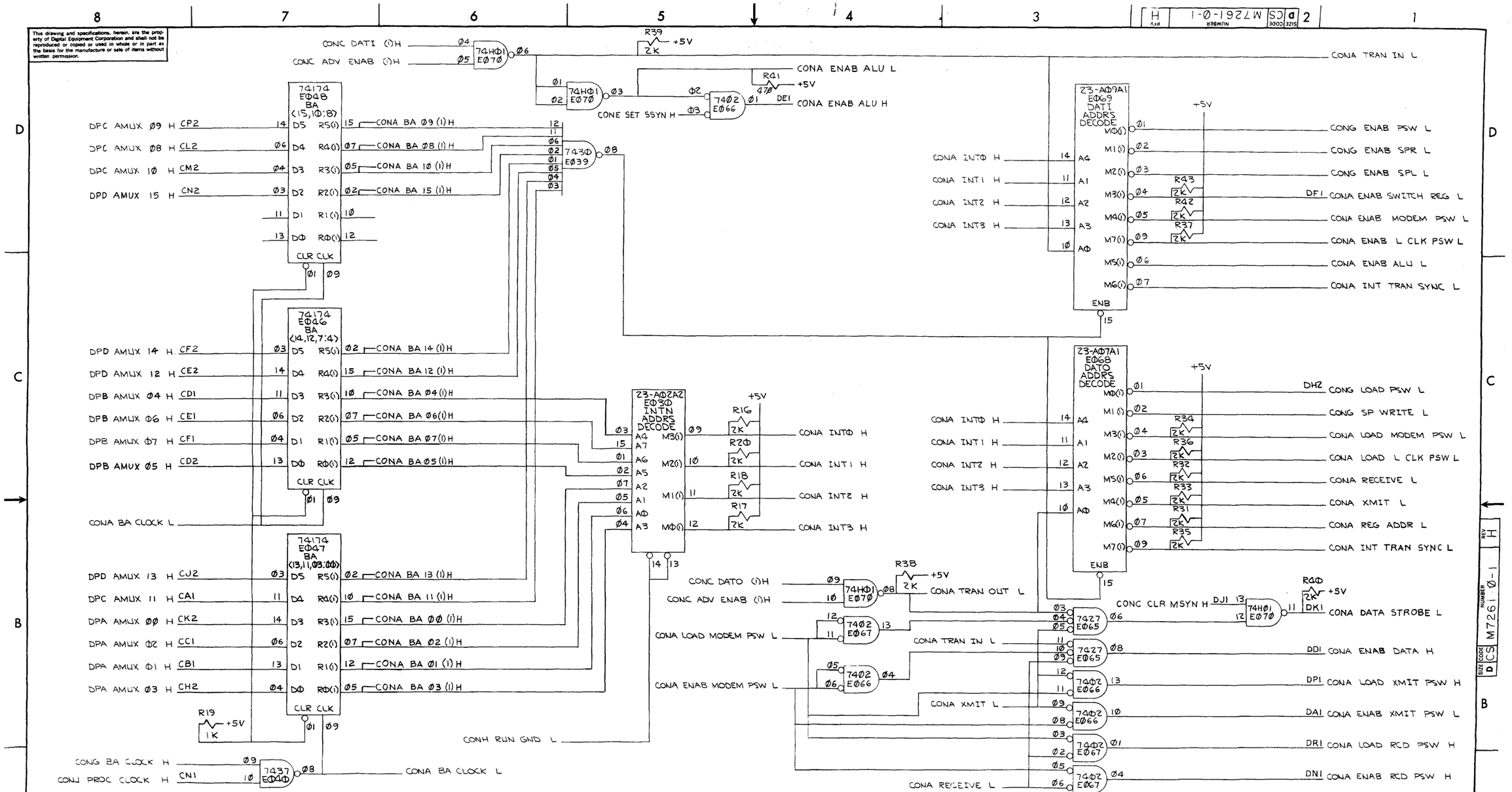

This drawing and specifications, herein, are the property of Digital Equipment Corporation and shall not be reproduced or copied or used in whole or in part as the basis for the manufacture or sale of items without written permission.

FIRST USED ON OPTION/MODEL	QTY.	DESCRIPTION	PART NO.	ITEM NO.
11/Ø5	PARTS LIST			

UNLESS OTHERWISE SPECIFIED DIMENSION IN INCHES. TOLERANCES

DECIMALS	ANGLES
.XXX = .005	±0° 30'
.XX = .02	

REMOVE BURRS AND BREAK SHARP CORNERS SURFACE QUALITY ✓

MATERIAL

FINISH

DRN. W.MAJOR DATE 2/18/72

CHK'D DATE

ENG. DATE 4/26/72

PROJ ENG. DATE

PROD. DATE

NEXT HIGHER ASSY. B-DD-KD11-B

SCALE

SHEET 3 OF

digital EQUIPMENT CORPORATION MAYNARD MASSACHUSETTS

TITLE CONTROL LOGIC & MICROPROGRAM (CONA)

SIZE	CODE	NUMBER	REV.
D	CS	M7261-Ø-1	H

DIST.

REVISIONS | CHANGE NO. | REV. | CHK

DEC FORM NO DRD 102-B

This drawing and specifications, herein, are the property of Digital Equipment Corporation and shall not be reproduced or copied or used in whole or in part as the basis for the manufacture or sale of items without written permission.

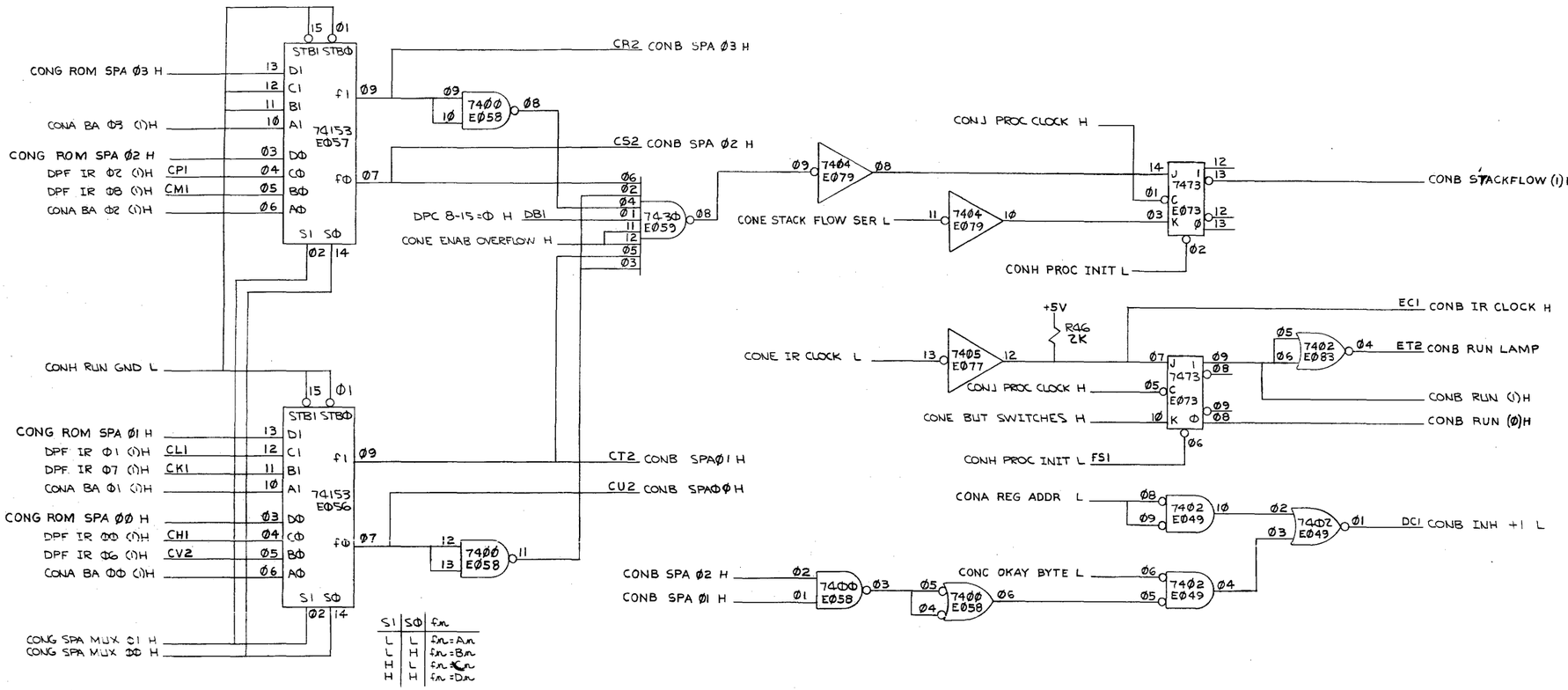

STACKFLOW & SPM

FIRST USED ON OPTION/MODEL	QTY.	DESCRIPTION	PART NO.	ITEM NO.
11Ø5		PARTS LIST		

UNLESS OTHERWISE SPECIFIED DIMENSION IN INCHES. TOLERANCES

DECIMALS	ANGLES
.XXX = .005 .XX = .02 .X = .1	±0° 30'

REMOVE BURRS AND BREAK SHARP CORNERS SURFACE QUALITY ✓

MATERIAL —

FINISH —

	NAME	DATE
DRN.	W. MAJOR	2/17/72
CHK'D.		
ENG.		4/26/72
PROJ. ENG.		4/26/72
PROD.		4/26/72

NEXT HIGHER ASSY. B-DD-KD11-B

SCALE —

SHEET 4 OF

DIST.

digital EQUIPMENT CORPORATION MAYNARD MASSACHUSETTS

TITLE CONTROL LOGIC & MICROPROGRAM (CONB)

SIZE D | CODE CS | NUMBER M7261-Ø-1 | REV. H

REVISIONS | REV | CHANGE NO | CHK

DEC FORM NO DRD 102-B

This drawing and specifications, herein, are the property of Digital Equipment Corporation and shall not be reproduced or copied or used in whole or in part as the basis for the manufacture or sale of items without written permission.

CONJ ALLOW PC L
CONG ENAB IN PAUSE L
DPG ENAB NON MOD H
EL2
7427 E063
7473 DATIP E008
COND INIT H
CONC DAT ENAB L
CONC DATIP (I)L
CONG DATI L
7473 DATI E017
CONC D REQ H
CONC DATI (I)H
CONC NPR GRANT H
CONC SACK OR TO DEL (Φ)L
COND BBSY H
8815 E014
CONC SSYN (Φ)H
CONC MSYN (Φ)H
CONC SET BBSY H
7473 BBSY E043
CONJ BC CLOCK H
CONC EOT H
CONC BBSY (I) H
CONC BBSY (/)L
CONJ LNG PROC CLOCK H
7473 MSYN E060
CONC MSYN (I)H
CONC MSYN (/)L
CONC GOOD TRAN L
CONC MSYN OUT H
CONF MPC Φ3 L
CONC CLR MSYN H
CONC BUS ERROR (/)H
CONC ADV ENAB (/)L
COND SSYN H
CONC DATO (I) H
CONA INT TRAN SYNC L
R27 2K +5V
CONC TOTAL SSYN L
COND INIT H
CONC BUS INIT L
CONG DATO L
7473 DATO E017
CONC DATO (I)L
CONC BBSY (I) H
CONC DATIP (I) L
DM1 CONC DAT ENAB L
CONC CΦ H
CONC DAT TO (/)L
CONA BA ΦΦ (I)H
CONC D REQ H
CONA REG ADDR L
CONJ LNG PROC CLOCK H
CONC BUS ERROR H
CONC SET DBE H
CONC DB ERROR H
CONF MPC Φ6 L
R25 2K +5V
7473 BE E050
7473 DBE E060
CONC CLR MSYN H
CONC OKAY BYTE L
DPG BYTE L
CONG ALLOW BYTE L
CONJ BC CLOCK H
CONC EOT H
CONC BUS INIT L
7473 ALLOW BYTE E043
COND INIT H
CONB RUN (Φ)H
7427 E074
CONC GOOD TRAN L
CONC SET DBE H
CONC DB ERROR H
CONH R88 H
CONC CKOFF (I)H
CONG CKOFF L
CONJ PROC CLOCK L
7474 CKOFF E080
CONC CKOFF (Φ)H
+5V R23 1K
CONC R23 H
CONJ MAN CLK L
7474 DAT TO E034
CONC DAT TO (I)L
CONH RUN GND L
CONC MSYN (I)L
9602 22µS E025
+5V R22 30K
C109 2200 PF
CONC EOT CLR L
CONF AUX CONTROL L
CONJ LNG PROC CLOCK L
CONH PROC INIT L
CONC BG RESTART L
CONH CLR CKOFF (I)H
CONC CLR MSYN H
CONH RBB H
CONG CKOFF L
CONJ PROC CLOCK L
CONH PROC INIT L
CONC BR GRANT H
CONE BUT SERVICE H
7474 ADV ENAB E037
CONC ADV ENAB (I)H
CONC ADV ENAB (/)L

UNIBUS CONTROL

FIRST USED ON OPTION/MODEL	QTY.	DESCRIPTION	PART NO.	ITEM NO.
11/05		PARTS LIST		

UNLESS OTHERWISE SPECIFIED DIMENSION IN INCHES. TOLERANCES
DECIMALS .XXX = .005 .XX = .02 X = .1
ANGLES ±0° 30'
REMOVE BURRS AND BREAK SHARP CORNERS SURFACE QUALITY ✓
MATERIAL —
FINISH —

DRN. W. MAJOR DATE 3/11/72
CHK'D. DATE 4/26/72
ENG. DATE 4/26/72
PROJ. ENG. DATE 4/26/72
PROD. DATE

digital EQUIPMENT CORPORATION MAYNARD MASSACHUSETTS

TITLE CONTROL LOGIC & MICROPROGRAM (CONC)

NEXT HIGHER ASSY. B-DD-KD11-B
SCALE —
SHEET 5 OF

SIZE	CODE	NUMBER	REV.
D	CS	M7261-0-1	J

DIST

REVISIONS: REV | NO | CHANGE | CHK

DEC FORM NO DRD 102-B

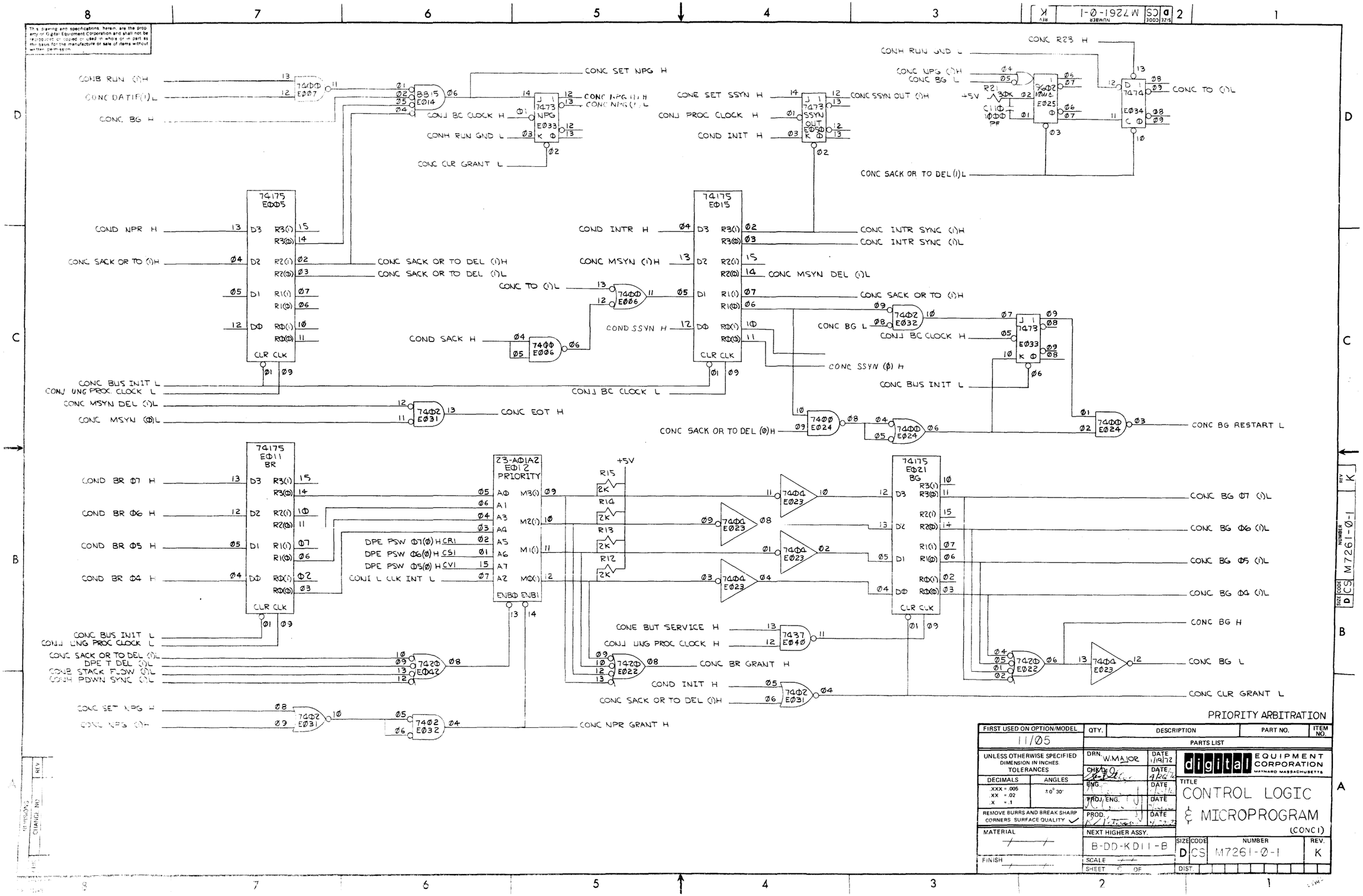

PRIORITY ARBITRATION

FIRST USED ON OPTION/MODEL	QTY.	DESCRIPTION	PART NO.	ITEM NO.
11/05		PARTS LIST		

UNLESS OTHERWISE SPECIFIED DIMENSION IN INCHES. TOLERANCES

DECIMALS	ANGLES
.XXX = .005	±0° 30'
.XX = .02	
.X = .1	

REMOVE BURRS AND BREAK SHARP CORNERS SURFACE QUALITY ✓

MATERIAL

FINISH

DRN. W.MAJOR DATE 1/19/72

CHK'D. DATE 4/26/72

ENG. DATE

PROJ. ENG. DATE

PROD. DATE

NEXT HIGHER ASSY. B-DD-KD11-B

SCALE

SHEET OF

digital EQUIPMENT CORPORATION MAYNARD MASSACHUSETTS

TITLE CONTROL LOGIC & MICROPROGRAM (CONC1)

SIZE	CODE	NUMBER	REV.
D	CS	M7261-0-1	K

DIST.

This drawing and specifications, herein, are the property of Digital Equipment Corporation and shall not be reproduced or copied or used in whole or in part as the basis for the manufacture or sale of items without written permission.

BUS NPR L — AS2 — 11 — 38Φ E0D1 — 13 — COND NPR H
CONH RUN GND L — 12
BUS BR7 L — AT2 — Ø9 — 38Φ E0D1 — 14 — COND BR Ø7 H
BUS BR6 L — AU2 — 10
BUS BR5 L — BC1 — 11 — 38Φ E0D1 — 13 — COND BR Ø6 H
BUS BR4 L — BD2 — 12
BUS INTR L — AB1 — Ø5 — 38Φ E0D1 — Ø3 — COND BR Ø5 H
BUS SACK L — AR2 — Ø4
Ø6 — 38Φ E0D1 — Ø2 — COND BR Ø4 H
Ø7
Ø9 — 38Φ E0D1 — 14 — COND INTR H
10
Ø9 — 38Φ E0D1 — 14 — COND SACK H
10
COND ASRT BBSY H — 11 — 8881 E0D3 — 13 — AP2 — BUS BBSY L
12
Ø6 — 38Φ E0D4 — Ø2 — COND BBSY H
Ø7
CONC SSYN OUT (I)L — Ø5 — 8881 E0D2 — Ø4 — BU1 — BUS SSYN L
Ø6
Ø5 — 38Φ E0D4 — Ø3 — COND SSYN H
Ø4
Ø9 — 8881 E0D3 — 10 — AA1 — BUS INIT L
Ø8
11 — 38Φ E0D4 — 13 — DU1 — COND INIT H
CONH ASRT BUS INIT H — 12
CONH RUN GND L
CONC NPG (I)L — Ø8 — 8881 E0D3 — 10 — AU1 — BUS NPG H
Ø9
CONC BG Ø7 (I)L — Ø8 — 8881 E0Ø2 — 10 — AV1 — BUS BG7 H
Ø3
CONC BG Ø6 (I)L — 11 — 8881 E0Ø2 — 13 — BA1 — BUS BG6 H
12
CONC BG Ø5 (I)L — Ø5 — 8881 E0Ø2 — Ø4 — BB1 — BUS BG5 H
Ø6
CONC BG Ø4 (I)L — Ø2 — 8881 E0Ø2 — Ø1 — BE2 — BUS BG4 H
+5V — R11 1K — Ø3
COND R11 H — Ø2 — 8881 E0Ø2 — Ø1 — BV1 — BUS MSYN L
CONC MSYN OUT H — Ø3
CONC DATO (I)H — Ø8 — 8881 E0Ø2 — 10 — BT2 — BUS C1 L
Ø9
COND ASRT BBSY H — 12 — 8881 E0Ø2 — 13 — BU2 — BUS C0 L
CONC C0 H — 11
BUS AC LO L — BF1 — Ø5 — 38Φ E0Ø1 — Ø3 — COND AC LO H
CONH RUN GND L — Ø4
Ø6 — 38Φ E0Ø1 — Ø2 — COND DC LO H
BUS DC LO L — BF2 — Ø7

CONA BA 15 (I)H — Ø5
CONA BA 14 (I)H — Ø7 — 74LSØ4 E041 — Ø6 — Ø5 — 74ØØ4 E023 — Ø6
CONA BA 13 (I)H — Ø3

Ø6 — 8881 E013 — Ø5 — Ø4 — BS1 — BUS A17 L
Ø2 — 8881 E013 — Ø3 — Ø1 — BS2 — BUS A16 L
Ø2 — 8881 E037 — Ø3 — Ø1 — BR1 — BUS A15 L
Ø5 — 8881 E037 — Ø6 — Ø4 — BR2 — BUS A14 L
11 — 8881 E037 — 12 — 13 — BP1 — BUS A13 L
CONA BA 12 (I)H — Ø9 — 8881 E037 — Ø8 — 10 — BP2 — BUS A12 L
CONA BA 11 (I)H — Ø2 — 8881 E038 — Ø3 — Ø1 — BN1 — BUS A11 L
CONA BA 10 (I)H — Ø5 — 8881 E038 — Ø6 — Ø4 — BN2 — BUS A10 L
CONA BA Ø9 (I)H — 11 — 8881 E038 — 12 — 13 — BM1 — BUS A09 L
CONA BA Ø8 (I)H — Ø9 — 8881 E038 — Ø8 — 10 — BM2 — BUS A08 L
CONA BA Ø7 (I)H — Ø2 — 8881 E028 — Ø3 — Ø1 — BL1 — BUS A07 L
CONA BA Ø6 (I)H — Ø5 — 8881 E028 — Ø6 — Ø4 — BL2 — BUS A06 L
CONA BA Ø5 (I)H — 11 — 8881 E028 — 12 — 13 — BK1 — BUS A05 L
CONA BA Ø4 (I)H — Ø9 — 8881 E028 — Ø8 — 10 — BK2 — BUS A04 L
CONA BA Ø3 (I)H — Ø5 — 8881 E029 — Ø6 — Ø4 — BJ1 — BUS A03 L
CONA BA Ø2 (I)H — Ø2 — 8881 E029 — Ø3 — Ø1 — BJ2 — BUS A02 L
CONA BA Ø1 (I)H — 11 — 8881 E029 — 12 — 13 — BH1 — BUS A01 L
CONA BA ØØ (I)H — Ø9 — 8881 E029 — Ø8 — 10 — BH2 — BUS A00 L
CONC BBSY (I) L — Ø5 — 7437 E040 — Ø4 — Ø6 — COND ASRT BBSY H

DRIVERS & RECEIVERS

FIRST USED ON OPTION/MODEL	QTY.	DESCRIPTION	PART NO.	ITEM NO.
11Ø5	PARTS LIST			

UNLESS OTHERWISE SPECIFIED DIMENSION IN INCHES. TOLERANCES
DECIMALS: XXX = .005, XX = .02, X = .1 — ANGLES: ±0° 30'
REMOVE BURRS AND BREAK SHARP CORNERS SURFACE QUALITY ✓
MATERIAL — FINISH

DRN. W. MAJOR DATE 11/4/72
CHK'D. DATE
ENG. DATE
PROJ. ENG. DATE 11/24/72
PROD. DATE 11/27/72
NEXT HIGHER ASSY. B-DD-KD11-B
SCALE — SHEET 7 OF

digital EQUIPMENT CORPORATION MAYNARD MASSACHUSETTS

TITLE: CONTROL LOGIC & MICROPROGRAM (COND)

SIZE	CODE	NUMBER	REV.
D	CS	M7261-Ø-1	J

DIST.

REVISIONS: REV. | INS. NO. | CHANG | CHK

DEC FORM NO DRD 102-B

This drawing and specifications, herein, are the property of Digital Equipment Corporation and shall not be reproduced or copied or used in whole or in part as the basis for the manufacture or sale of items without written permission.

74154 EØ78 BUT DECODE

CONG BUT Ø3 L
CONG BUT Ø2 L
CONG BUT Ø1 L
CONG BUT ØØ L
CONC BUS ERROR (1)H
CONJ PROC CLOCK L
STBI STBØ

f15 CONE BUT NONE L
f14 EK2 CONE JMP OR JSR L
f13 EV2 CONE BUT IR DECODE L
f12 CONE BUT BYTE L
f11 EH1 CONE ALLOW CONSTANTS L
f1Ø CONE BUT DESTINATION L
fØ9 CONE BUT MOVE L
fØ8 CONE BUT INTERRUPT L
fØ7 CONE BUT INIT L
fØ6 CONE BUT UNARY L
fØ5 CONE BUT SWITCHES L
fØ4 CONE BUT NON MOD L
fØ3 CONE BUT SERVICE L
fØ2 CONE IR CLOCK L
fØ1 CONE ENAB OVERFLOW H
fØØ CONE BUT INIT H

Ø9 7405 EØ77 Ø8 R47 2K +5V CONE SET SSYN H
7405 EØ77 R45 2K +5V
7ØØ2 EØ76
74H01 EØ86 R54 470 +5V 7404 EØ84 Ø6 ER2 CONE ENAB UNARY L

74174 EØ88 SWITCHES

CONSOLE START L FE2 Ø4 D5 R5(1) Ø5 CONE START (1)L
CONSOLE LOAD L FJ1 11 D4 R4(1) 1Ø CONE LOAD (1)L
CONSOLE DEP L FD2 Ø6 D3 R3(1) Ø7 CONE DEP (1)L
CONSOLE EXAM L FF2 13 D2 R2(1) 12 CONE EXAM (1)L
CONSOLE CONT L FH2 14 D1 R1(1) 15 CONE CONT (1)L
CONSOLE STOP L FH1 Ø3 DØ R0(1) Ø2 CONE STOP (1)L
Ø1 Ø9 CONJ UNG PROC CLOCK L
+5V R89 1K

Ø3 7405 EØ98 Ø4 +5V R63 2K 11 7405 EØ98 1Ø FL1 CONF MPC Ø6 L
FL2 CONE ASRT INIT H

+5V R55 1K +5V R58 2K CONE EXAM SW L
D 1 7474 EØ85 C Ø
12 13 Ø8 Ø9 11 1Ø
CONE IST EXAM (1)H
+5V R57 2K CONE DEP SW L
D 1 7474 EØ85 C Ø
Ø2 Ø1 Ø6 Ø5 Ø3 Ø4
CONE IST DEP (1)H
CONE BUT SWITCHES H Ø4
CONJ PROC CLOCK H Ø5
74H01 EØ86 Ø6
+5V R56 2K
CONH PROC INIT L

23-AØ9A2 E1Ø1 BUT SERVICE

DPE T DEL (1)L FS2 15 A7 M3(1) Ø9 CONF MPC Ø4 L
DPG WAIT L FR1 Ø1 A6
DPH XMIT INT L FP1 Ø2 A5 M2(1) 11 CONF MPC Ø2 L
DPH RED INT L FR2 Ø3 A4
CONE STOP (1)L Ø4 A3 M1(1) 1Ø CONF MPC Ø1 L
CONI L CLK INT L Ø7 A2
CONH PDWN SYNC (1)L Ø6 A1 MØ(1) 12 CONF MPC ØØ L
CONB STACKFLOW (1)L Ø5 AØ
ENB1 ENBØ
14 13
CONE NO BG SERV L

23-A13A1 EØ9Ø INT INTR ACK

M7(1) Ø9
M2(1) Ø3 FB1 CONE XMIT SER L
M3(1) Ø4 FA1 CONE RCD SER L
M4(1) Ø5 CONE PWR FAIL SER L
M5(1) Ø6 CONE STACK FLOW SER L
M6(1) Ø7 CONE L CLK SER L
M1(1) Ø2
MØ(1) Ø1
14 A4
12 A2
13 A3
11 A1
1Ø AØ
CONH RUN GND L
15

+5V RG1 2K RGØ 2K RG8 2K RG9 2K RG5Ø 2K

Ø1 7404 EØ79 Ø2 CONE BUT SERVICE H
CONE BUT SERVICE L Ø8
CONC BR GRANT H Ø9
7ØØ2 EØ76 1Ø Ø7 7404 EØ84 Ø8 CONE NO BG SERV L

23-A1ØA1 E1ØØ SWITCH

CONE LOAD (1)L Ø2
CONE EXAM (1)L Ø1
CONE CONT (1)L
CONE DEP (1)L Ø5
74H01 EØ89 Ø3 11 A1
12 A2
74H01 EØ89 Ø4 Ø6 1Ø AØ
13 A3
14 A4
RG4 2K +5V
RG5 2K +5V

M6(1) Ø7 CONE EXAM SW L
M7(1) Ø9 CONF MPC Ø5 L
M4(1) Ø5 CONF MPC ØØ L
M3(1) Ø4 CONF MPC Ø4 L
M1(1) Ø2 CONF MPC Ø2 L
MØ(1) Ø1 CONF MPC Ø3 L
M5(1) Ø6 CONE DEP SW L
M2(1) Ø3 CONF MPC Ø1 L
ENB
15

CONE BUT SWITCHES L Ø3 7404 EØ79 Ø4 CONE BUT SWITCHES H
DPG CAL DEST L EU1 12 7402 EØ83 13 Ø3 7404 EØ84 Ø4 1Ø 74H01 EØ89 Ø8 FC1 CONE BUT DESTINATION H
CONE BUT IR DECODE L 11
RG2 2K +5V
CONE BUT DESTINATION L EU1 Ø9
DPG BYTE L DL1 Ø5
CONE BUT BYTE L Ø6 7402 EØ87 Ø4 Ø1 7405 EØ98 Ø2 FN1 CONF MPC Ø5 L
1Ø
CONA BA ØØ (1)H Ø9 74H01 EØ99 Ø8 FJ2 CONF MPC Ø4 L
CONE BUT INTERRUPT L Ø1 7404 EØ84 Ø2 12
CONC INTR SYNC (1)H 13 74H01 EØ89 11
DPG TRAP L FD1 Ø2
CONE BUT IR DECODE L EV2 Ø3 7402 EØ87 Ø1 Ø5 7405 EØ98 Ø6
Ø8
DPG EMT L FE1 Ø9 7402 EØ87 1Ø Ø9 7405 EØ98 Ø8 FK1 CONF MPC Ø3 L
11
DPG RTS L FF1 12 7402 EØ87 13 13 7405 EØ98 12 FM1 CONF MPC Ø2 L
DPG MOVE L FK2
13
CONE BUT MOVE L 13 7404 EØ84 12 12 74H01 EØ99 11 FN2 CONF MPC Ø1 L
Ø2
DPG BYTE L Ø1 74H01 EØ99 Ø3 FP2 CONF MPC ØØ L
DPG ENAB NON MOD H
Ø4
CONE BUT NON MOD L 11 7404 EØ84 1Ø Ø5 74H01 EØ99 Ø6

MICRO BRANCH LOGIC

FIRST USED ON OPTION/MODEL	QTY.	DESCRIPTION	PART NO.	ITEM NO.
11/Ø5		PARTS LIST		

UNLESS OTHERWISE SPECIFIED DIMENSION IN INCHES. TOLERANCES
DECIMALS: .XXX = .005, .XX = .02, .X = .1 | ANGLES: ±0° 30'
REMOVE BURRS AND BREAK SHARP CORNERS SURFACE QUALITY ✓
MATERIAL
FINISH

DRN. W. MAJOR DATE 2/26/72
CHK'D. DATE
ENG. DATE
PROJ. ENG. DATE
PROD. DATE

digital EQUIPMENT CORPORATION MAYNARD MASSACHUSETTS

TITLE: CONTROL LOGIC & MICROPROGRAM (CONE)

NEXT HIGHER ASSY. B-DD-KD11-B
SCALE
SHEET 8 OF

SIZE	CODE	NUMBER	REV.
D	CS	M7261-Ø-1	H

DIST.

REVISIONS | REV | CHANGE NO | CHK

DEC FORM NO 12570 1024-B

This drawing and specifications, herein, are the property of Digital Equipment Corporation and shall not be reproduced or copied or used in whole or in part as the basis for the manufacture or sale of items without written permission.

23-A04A2 E09Z

CONC BUS ERROR (1)H

CONH RUN GND L
CONH PROC INIT H

CONF ROM ADRS 07 (1)H
CONF ROM ADRS 06 (1)H
CONF ROM ADRS 05 (1)H
CONF ROM ADRS 04 (1)H
CONF ROM ADRS 03 (1)H
CONF ROM ADRS 02 (1)H
CONF ROM ADRS 01 (1)H
CONF ROM ADRS 00 (1)H

15	A7	M3(1)	09	R69 470	FM2 CONF MPC 07 L
01	A6				
02	A5	M2(1)	10	R68 470	FL1 CONF MPC 06 L
03	A4				
04	A3	M1(1)	11	R67 470	FN1 CONF MPC 05 L
07	A2				
06	A1			R66	
05	A0	M0(1)	12	470	FL2 CONF MPC 04 L
	ENB1	ENB0			
	14	13			

23-A10A2 E10Z3

15	A7	M3(1)	09	R94 470	FK1 CONF MPC 03 L
01	A6				
02	A5	M2(1)	10	R93 470	FM1 CONF MPC 02 L
03	A4				
04	A3	M1(1)	11	R92 470	FN2 CONF MPC 01 L
07	A2				
06	A1			R91	
05	A0	M0(1)	12	470	FP2 CONF MPC 00 L
	ENB1	ENB0			
	14	13			

74175 E10Z MPC

CONF MPC 07 L	13	D3 R3(1)	15 CONF ROM ADRS 07 (1)L
		R3(0)	14 CONF ROM ADRS 07 (1)H
CONF MPC 06 L	12	D2 R2(1)	10 CONF ROM ADRS 06 (1)L
		R2(0)	11 CONF ROM ADRS 06 (1)H
CONF MPC 02 L	04	D1 R1(1)	02 CONF ROM ADRS 02 (1)L
		R1(0)	03 CONF ROM ADRS 02 (1)H
CONF MPC 01 L	05	D0 R0(1)	07 CONF ROM ADRS 01 (1)L
		R0(0)	06 CONF ROM ADRS 01 (1)H
		CLR CLK	

+5V R90 1K

01 09

23-A15A2 E09Z4

15	A7	M3(1)	09	R77 470	ED2 CONF ALU MODE H
01	A6				
02	A5	M2(1)	10	R76 470	EB1 CONF CIN H
03	A4				
04	A3	M1(1)	11	R75 470	EA1 CONF F SHIFT L
07	A2				
06	A1			R74	
05	A0	M0(1)	12	470	ES2 CONF AUX CONTROL L
	ENB0	ENB1			
	13	14			

DPG DIS ALU S BITS H EJ2

CONF ROM ADRS 07 (1)L
CONF ROM ADRS 06 (1)L
CONF ROM ADRS 05 (1)L
CONF ROM ADRS 04 (1)L
CONF ROM ADRS 03 (1)L
CONF ROM ADRS 02 (1)L
CONF ROM ADRS 01 (1)L
CONF ROM ADRS 00 (1)L

23-A11A2 E10Z4

15	A7	M3(1)	09	R98 470	EE1 CONF ALU S3 L
01	A6				
02	A5	M2(1)	10	R97 470	EF2 CONF ALU S2 L
03	A4				
04	A3	M1(1)	11	R96 470	EE2 CONF ALU S1 L
07	A2				
06	A1			R95	
05	A0	M0(1)	12	470	ED1 CONF ALU S0 L
	ENB1	ENB0			
	14	13			

74175 E09Z MPC

CONF MPC 05 L	12	D3 R3(1)	10 CONF ROM ADRS 05 (1)L
		R3(0)	11 CONF ROM ADRS 05 (1)H
CONF MPC 04 L	13	D2 R2(1)	15 CONF ROM ADRS 04 (1)L
		R2(0)	14 CONF ROM ADRS 04 (1)H
CONF MPC 03 L	04	D1 R1(1)	02 CONF ROM ADRS 03 (1)L
		R1(0)	03 CONF ROM ADRS 03 (1)H
CONF MPC 00 L	05	D0 R0(1)	07 CONF ROM ADRS 00 (1)L
		R0(0)	06 CONF ROM ADRS 00 (1)H
		CLR CLK	

01 09

CONJ PROC CLOCK L

08
DPG BYTE L — 09

74Z02 E08Z3 — 1Z — EU2 CONF AUX BYTE H

MICRO PC

FIRST USED ON OPTION/MODEL	QTY.	DESCRIPTION	PART NO.	ITEM NO.
11/05		PARTS LIST		

UNLESS OTHERWISE SPECIFIED DIMENSION IN INCHES. TOLERANCES
DECIMALS .XXX = .005 .XX = .02 .X = .1 ANGLES ±0° 30'
REMOVE BURRS AND BREAK SHARP CORNERS SURFACE QUALITY
MATERIAL
FINISH

DRN. W. MAJOR DATE 2/4/72
CHK. DATE 4/26/72
ENG. DATE 4/26/72
PROJ. ENG. DATE 4/24/72
PROD. DATE 4/24/72
NEXT HIGHER ASSY. B-DD-KD11-B
SCALE
SHEET 9 OF

digital EQUIPMENT CORPORATION MAYNARD MASSACHUSETTS

TITLE CONTROL LOGIC MICROPROGRAM (CONF)

SIZE D | CODE CS | NUMBER M7261-0-1 | REV. J
DIST.

REVISIONS: REV. | CHANGE NO. | CHK.

DEC FORM NO ORD 102-B

This drawing and specifications, herein, are the property of Digital Equipment Corporation and shall not be reproduced or copied or used in whole or in part as the basis for the manufacture or sale of items without written permission.

23-A14A2 E1Ø7

CONG BUS ERROR (1)H

15	A7	M3(1)	Ø9	R11Ø 47Ø	ER1 CONG CKOFF L
Ø1	A6				
Ø2	A5	M2(1)	1Ø	R1Ø9 2K	CONG ALLOW BYTE L
Ø3	A4				
Ø4	A3	M1(1)	11	R1Ø8 2K	CONG DATO L
Ø7	A2				
Ø6	A1	MØ(1)	12	R1Ø7 2K	CONG DATI L
Ø5	AØ				
	ENB1	ENBØ	14	13	

23-A13A2 E1Ø6

15	A7	M3(1)	Ø9	R1Ø6 47Ø	CONG SPA MUX ØØ H
Ø1	A6				
Ø2	A5	M2(1)	1Ø	R1Ø5 47Ø	CONG ROM SPA ØØ H
Ø3	A4				
Ø4	A3	M1(1)	11	R1Ø4 47Ø	CONG SPA MUX Ø1 H
Ø7	A2				
Ø6	A1	MØ(1)	12	R1Ø3 47Ø	DS1 CONG BBOT H
Ø5	AØ				
	ENB1	ENBØ	14	13	

23-A12A2 E1Ø5

CONH PROC INIT H
CONH RUN GND L

15	A7	M3(1)	Ø9	R1Ø2 47Ø	CONG BUT Ø1 L
Ø1	A6				
Ø2	A5	M2(1)	1Ø	R1Ø1 47Ø	CONG BUT ØØ L
Ø3	A4				
Ø4	A3	M1(1)	11	R1ØØ 47Ø	CONG BUT Ø2 L
Ø7	A2				
Ø6	A1	MØ(1)	12	R99 47Ø	CONG BUT Ø3 L
Ø5	AØ				
	ENB1	ENBØ	14	13	

CONF ROM ADRS Ø7 (1)L
CONF ROM ADRS Ø6 (1)L
CONF ROM ADRS Ø5 (1)L
CONF ROM ADRS Ø4 (1)L
CONF ROM ADRS Ø3 (1)L
CONF ROM ADRS Ø2 (1)L
CONF ROM ADRS Ø1 (1)L
CONF ROM ADRS ØØ (1)L

23-A17A2 E095

CONF ROM ADRS Ø7 (1)H
CONF ROM ADRS Ø6 (1)H
CONF ROM ADRS Ø5 (1)H
CONF ROM ADRS Ø4 (1)H
CONF ROM ADRS Ø3 (1)H
CONF ROM ADRS Ø2 (1)H
CONF ROM ADRS Ø1 (1)H
CONF ROM ADRS ØØ (1)H

15	A7	M3(1)	Ø9	RB1 2K	CONG BA CLOCK L
Ø1	A6				CONG SP WRITE L
Ø2	A5	M2(1)	1Ø	RBØ 47Ø	
Ø3	A4				
Ø4	A3	M1(1)	11	R79 2K	
Ø7	A2				
Ø6	A1	MØ(1)	12	R78 47Ø	
Ø5	AØ				
	ENB1	ENBØ	14	13	

7ØØ1 E079: Ø5 → Ø6 — CONG BA CLOCK H

EH2 CONG BTOP H

7ØØ4 E079: 13 → 12 — EF1 CONG SP WRITE H

CONG ROM SPA Ø2 H

CONG ROM ALEG 1 L
EP2 CONG ROM ALEG Ø L
EM2 CONG BMODE ØØ H

23-AØ5A2 EØ93

15	A7	M3(1)	Ø9	R73 47Ø	
Ø1	A6				
Ø2	A5	M2(1)	1Ø	R72 47Ø	
Ø3	A4				
Ø4	A3	M1(1)	11	R71 47Ø	
Ø7	A2				
Ø6	A1	MØ(1)	12	R7Ø 47Ø	DPF ROTATE H EN1
Ø5	AØ				
	ENB1	ENBØ	14	13	

7ØØ2 E076: Ø3 → Ø1; Ø2 → Ø2

7ØØ5 E077: Ø1 → Ø2 — +5V R52 47Ø — CONG ENAB PSW L

7ØØ5 E077: Ø5 → Ø6 — +5V R51 47Ø — EK1 CONG ENAB PSW H

74HØ1 E086: 1Ø, Ø9 → Ø8

74HØ1 E086: 13, 12 — -5V 47Ø R53 — EN2 CONG ENAB SPL L

7ØØ5 E077: Ø3 → Ø4 — +5V 47Ø R53 — EL1 CONG ENAB SPR L

EM1 CONG BMODE Ø1 H

23-A16A2 EØ96

15	A7	M3(1)	Ø9	RB3 2K	CONG LOAD PSW L
Ø1	A6				
Ø2	A5	M2(1)	1Ø	RB4 47Ø	CONG ROM SPA Ø1 H
Ø3	A4				
Ø4	A3	M1(1)	11	RB5 47Ø	CONG ROM SPA Ø3 H
Ø7	A2				
Ø6	A1	MØ(1)	12	RB2 2K	CONG ENAB IN PAUSE L
Ø5	AØ				
	ENB1	ENBØ	14	13	

CONTROL STORE

FIRST USED ON OPTION/MODEL	QTY.	DESCRIPTION	PART NO.	ITEM NO.
11Ø5		PARTS LIST		

UNLESS OTHERWISE SPECIFIED DIMENSION IN INCHES. TOLERANCES

DECIMALS	ANGLES
.XXX = .005 .XX = .02 .X = .1	±0° 30'

REMOVE BURRS AND BREAK SHARP CORNERS SURFACE QUALITY ✓

MATERIAL —

FINISH —

DRN. W. MAJOR DATE 2/15/72
CHK'D. DATE
ENG. DATE
PROJ. ENG. DATE
PROD. DATE

digital EQUIPMENT CORPORATION MAYNARD MASSACHUSETTS

TITLE CONTROL LOGIC & MICROPROGRAM (CONG)

NEXT HIGHER ASSY. B-DD-KD11-B

SIZE D | CODE CS | NUMBER M7261-Ø-1 | REV. L

SCALE —

SHEET 10 OF

DIST.

REVISIONS | REV | CHANGE NO | CHK

DEC FORM NO DRD 102-B

SIZE D CODE CS NUMBER M7261-Ø-1 REV L

This drawing and specifications, herein, are the property of Digital Equipment Corporation and shall not be reproduced or copied or used in whole or in part as the basis for the manufacture or sale of items without written permission.

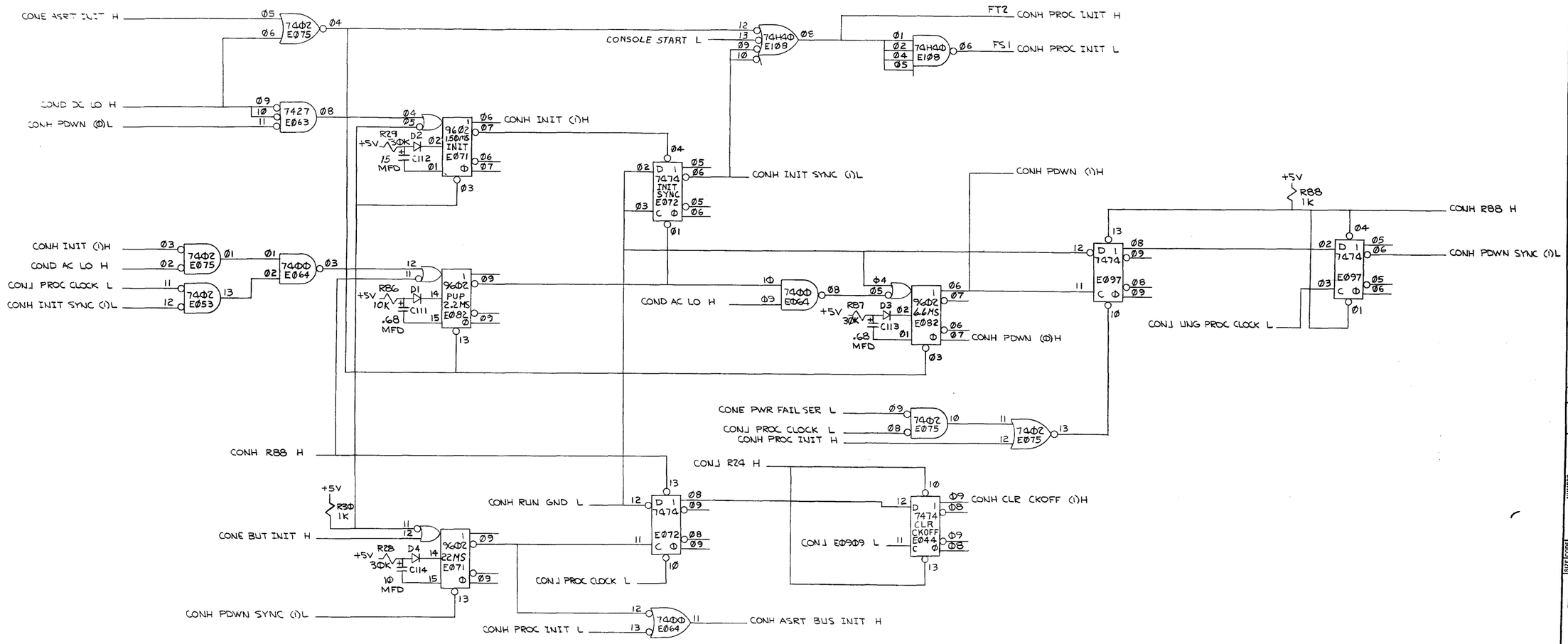

POWER FAIL

FIRST USED ON OPTION/MODEL	QTY.	DESCRIPTION	PART NO.	ITEM NO.
11/05		PARTS LIST		

UNLESS OTHERWISE SPECIFIED DIMENSION IN INCHES. TOLERANCES

DECIMALS	ANGLES
.XXX = .005	±0° 30'
.XX = .02	
.X = .1	

REMOVE BURRS AND BREAK SHARP CORNERS SURFACE QUALITY ✓

MATERIAL

FINISH

		DATE
DRN.	W. MAJOR	2/7/72
CHK'D.		4/26/72
ENG.		4/26/72
PROJ. ENG.		DATE
PROD.		DATE

NEXT HIGHER ASSY. B-DD-KD11-B

SCALE

SHEET 11 OF

digital EQUIPMENT CORPORATION MAYNARD MASSACHUSETTS

TITLE CONTROL LOGIC & MICROPROGRAM (CONH)

SIZE	CODE	NUMBER	REV.
D	CS	M7261-0-1	K

DIST.

REV | CHANGE NO. | CHK | REVISIONS

DEC FORM NO DRD 102-B

This drawing and specifications, herein, are the property of Digital Equipment Corporation and shall not be reproduced or copied or used in whole or in part as the basis for the manufacture or sale of items without written permission.

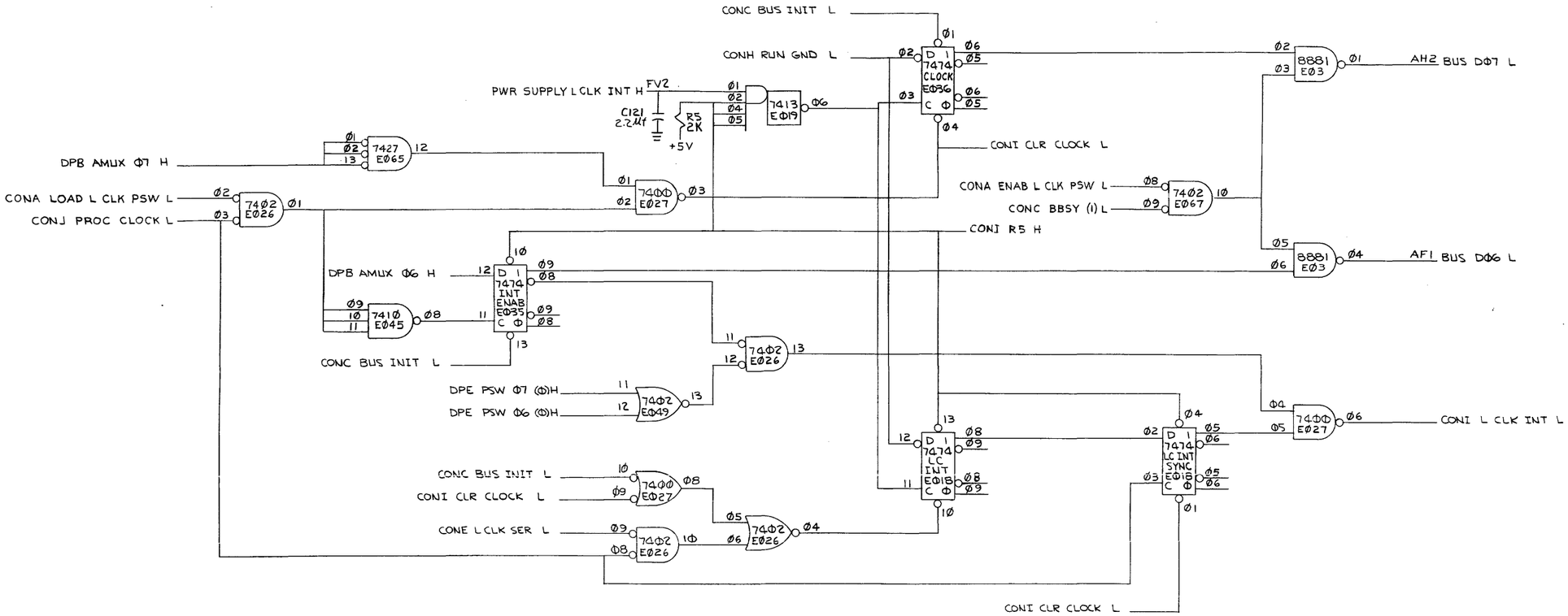

LINE CLOCK

FIRST USED ON OPTION/MODEL	QTY.	DESCRIPTION	PART NO.	ITEM NO.
11/05		PARTS LIST		

UNLESS OTHERWISE SPECIFIED DIMENSION IN INCHES. TOLERANCES

DECIMALS	ANGLES
.XXX = .005 .XX = .02 .X = .1	±0° 30'

REMOVE BURRS AND BREAK SHARP CORNERS SURFACE QUALITY ✓

MATERIAL —

FINISH —

DRN. W. MAJOR	DATE 3/2/72	digital EQUIPMENT CORPORATION MAYNARD MASSACHUSETTS
CHK'D.	DATE	
ENG.	DATE	
PROJ. ENG.	DATE	
PROD.	DATE	

TITLE: CONTROL LOGIC & MICROPROGRAM (CONI)

NEXT HIGHER ASSY. B-DD-KD11-B

SCALE —

SHEET 12 OF

SIZE	CODE	NUMBER	REV.
D	CS	M7261-Ø-1	K

DIST.

REVISIONS | REV | CHANGE NO | CHK

DEC FORM NO DRD 102-B

This drawing and specifications, herein, are the property of Digital Equipment Corporation and shall not be reproduced or copied or used in whole or in part as the basis for the manufacture or sale of items without written permission.

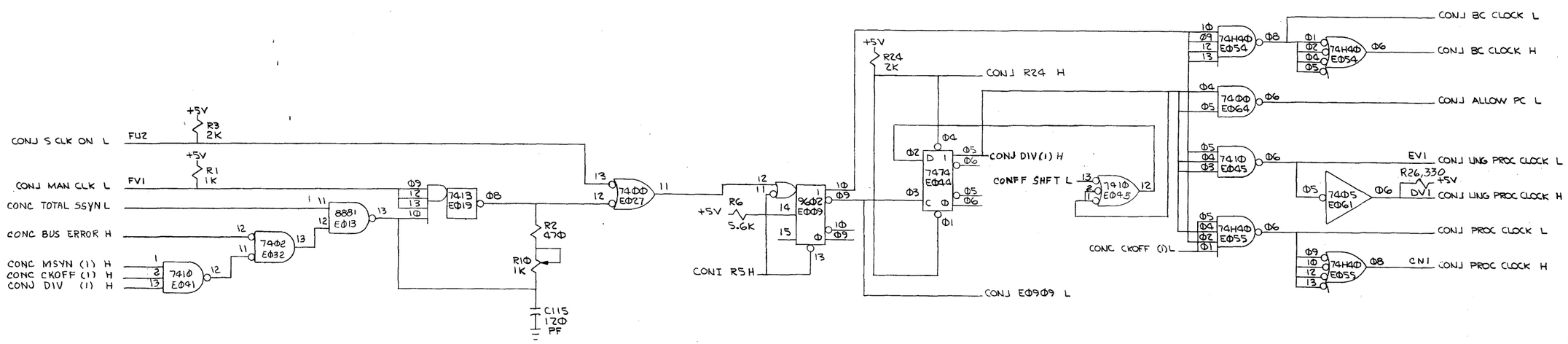

CPU CLOCK

FIRST USED ON OPTION/MODEL	QTY.	DESCRIPTION	PART NO.	ITEM NO.
11/05		PARTS LIST		

UNLESS OTHERWISE SPECIFIED DIMENSION IN INCHES. TOLERANCES

DECIMALS	ANGLES
.XXX = .005	±0° 30'
.XX = .02	
.X = .1	

REMOVE BURRS AND BREAK SHARP CORNERS SURFACE QUALITY ✓

MATERIAL

FINISH

DRN. W. MAJOR DATE 3/8/72
CHK'D. DATE 4/26/72
ENG. DATE 4/26/72
PROJ. ENG. DATE 4/26/72
PROD. DATE 4/26/72

NEXT HIGHER ASSY. B-DD-KD11-B

SCALE

SHEET 13 OF

digital EQUIPMENT CORPORATION MAYNARD, MASSACHUSETTS

TITLE CONTROL LOGIC & MICROPROGRAM (CONJ)

SIZE	CODE	NUMBER	REV.
D	CS	M7261-0-1	K

DIST.

REVISIONS: CHK | CHANG. NO. | REV.

DEC FORM NO DRD 102-B

This drawing and specifications, herein, are the property of Digital Equipment Corporation and shall not be reproduced or copied or used in whole or in part as the basis for the manufacture or sale of items without written permission.

39	38	37	36	35	34	33	32	31	30	29	28	27	26	25	24	23	22	21	20	19	18	17	16	15	14	13	12	11	10	Ø9	Ø8	Ø7	Ø6	Ø5	Ø4	Ø3	Ø2	Ø1	Ø0
CONF MPC Ø7 L	CONF MPC Ø6 L	CONF MPC Ø5 L	CONF MPC Ø4 L	CONF MPC Ø3 L	CONF MPC Ø2 L	CONF MPC Ø1 L	CONF MPC ØØ L	CONF ALU S3 L	CONF ALU S2 L	CONF ALU S1 L	CONF ALU SØ L	CONF ALU MODE L	CONF CIN H	CONF F *SHIFT* L	CONF AUX CONTROL L	CONG LOAD PSW L	CONG ROM SPA Ø1 H	CONG ROM SPA Ø3 H	CONG ENAB IN PAUSE L	CONG SPA MUX ØØ H	CONG ROM SPA ØØ H	CONG SPA MUX Ø1 H	CONG BBOT H	CONG BA CLOCK L	CONG BTOP H	CONG SP WRITE L	CONG ROM SPA Ø2 H	CONG CKOFF L	CONG ALLOW BYTE L	CONG DATO L	CONG DATI L	CONG ROM ALEG 1 L	CONG ROM ALEG Ø L	CONG BMODE ØØ H	CONG BMODE Ø1 H	CONG BUT Ø1 L	CONG BUT ØØ L	CONG BUT Ø2 L	CONG BUT Ø3 L
NXT								ALU					CRI	FSH	AUX	PSW	SPI	SP3	DIP	SMØ	SPØ	SM1	BBT	BAR	BTP	SPF	SP2	CKO	ABT	TNS		ALG		BRG		BUT			
F Ø92			F Ø3					F Ø4				F Ø94			F Ø96				F Ø6			F Ø95				F Ø7			F Ø93			F Ø5					

	31	30	29	28	27
	ALU				
AL	L	L	L	L	H
AA	L	L	L	L	L
AB	L	L	L	H	H
$A\overline{B}$	L	L	L	H	H
Ø	L	L	H	H	H
A OR B	L	H	L	L	H
BL	L	H	L	H	H
A PLUS B	L	H	H	L	L
A XOR B	L	H	H	L	H
A-B-1	H	L	L	H	L
$\overline{B}$	H	L	L	L	H
-1	H	H	H	H	H
A-1	H	H	H	L	L
$\overline{A}$	H	H	H	H	L
ASL	H	H	H	L	L
ROL	H	H	H	L	L
ASR	H	H	H	H	L
ROR	H	H	H	H	L

26 CRI	
OFF	L
ON	H

23 PSW	
HOLD	H
LOAD	L

14 BTP	
BREG	H
SEX	L
+1	L

10 ABT	
NO	H
YES	L

Ø5	Ø4
BRG	
H	H
L	H
H	L
L	L

LOAD
SLEFT
SRIGHT
HOLD

Ø3	Ø2	Ø1	ØØ
BUT			
H	H	H	H
H	L	H	H
L	H	H	H
L	L	H	H
H	H	L	H
L	H	L	H
H	L	L	H
L	L	L	H
H	H	H	L
H	L	H	L
L	H	H	L
L	L	H	L
H	H	L	L
L	H	L	L
H	L	L	L
L	L	L	L

NON
JMP/JSR
IR DECODE
BYTE
CONST
DEST
MOV
INTR
INIT
UNARY
SWITCHES
NON MOD
SERVICE
SSYNC
ENOVFLO
IR CLK

25 FSH	
OFF H	
ON L	

20 DIP	
OFF	H
ON	L

16 BBT	
BRG	H
SEX	H
+1	L

13 SPF	
READ	H
WRITE	L

Ø9	Ø8
TNS	
H	L
H	L
L	H

NONE
DATI
DATO

24 AUX	
OFF	H
ON	L

19 SMØ	17 SM1
H	H
H	L
L	H
L	L

ROM
IRS
IRD
BA

15 BAR	
HOLD	H
LOAD	L

11 CKO	
OFF	H
ON	L

Ø7	Ø6
ALG	
H	H
H	L
L	H
L	L

SP
NULL
SPR
PSW

CONTROL STORE WORD FORMAT

FIRST USED ON OPTION/MODEL	QTY.	DESCRIPTION	PART NO.	ITEM NO.
11/Ø5		PARTS LIST		

UNLESS OTHERWISE SPECIFIED DIMENSION IN INCHES. TOLERANCES
DECIMALS: .XXX = .005, .XX = .02, .X = .1 — ANGLES: ±0° 30'
REMOVE BURRS AND BREAK SHARP CORNERS SURFACE QUALITY ✓
MATERIAL —
FINISH —

DRN. — DATE 4-26-72
CHK'D. — DATE
ENG. — DATE
PROJ. ENG. — DATE
PROD. — DATE

digital EQUIPMENT CORPORATION MAYNARD MASSACHUSETTS

TITLE: CONTROL LOGIC & MICROPROGRAM

NEXT HIGHER ASSY. B-DD-KD11-B
SCALE —
SHEET 14 OF

SIZE	CODE	NUMBER	REV.
D	CS	M7261-Ø-1	H

DIST.

REVISIONS	CHANGE NO	CHK	REV

BRUNING 40-522 15840
DEC FORM NO. DRD 102-B

PAGE REVISION CONTROL SHEET

SH NO	PAGE REVISIONS	REMARKS
1	A	
2	A	
3	A	
4	A	
5	A	
6	A	
7	A	
8	A	
9	A	
10	A	
11	A	
12	A	
13	A	
14	A	
15	A	
16	A	
17	A	

ECO NO. 5 ETCH REV C

FIRST USED ON OPTION/MODEL

This document contains confidential proprietary information of DEC. This information shall not be disclosed to persons outside the employ of DEC, except by DEC personnel so authorized by DEC, and only for use by such other persons in the design, production or manufacture of products for DEC.
Copyright © 1972 Digital Equipment Corporation

	DRN.	DATE
	CHK'D M.T. Sullivan	DATE 9/21/72
	ENG.	DATE 8/17/72
	PROJ. ENG.	DATE 8/17/72
	PROD. M.T. Sullivan	DATE 9/2/72

NEXT HIGHER ASSY.

SCALE

SHEET 1 OF 17

digital EQUIPMENT CORPORATION MAYNARD, MASSACHUSETTS

TITLE

CONTROL LOGIC ROM PATTERNS

SIZE	CODE	NUMBER	REV.
B	RL	M7261-0-8	A

DIST.

```
                    /( =Y8 (PIN #9) CONA INT TRAN SYNC L
                    */( =Y7 (PIN #7) CONA REG ADDR L
                    **/( =Y6 (PIN #6) CONA RECEIVE L
                    ***/( =Y5 (PIN #5) CONA TRANSMIT L
                    ****/( =Y4 (PIN #4) CONA LOAD MODEM PSW L
                    *****/( =Y3 (PIN #3) CONA LOAD L CLK PSW L
                    ******/( =Y2 (PIN #2) CONG SP WRITE L
                    *******/( =Y1 (PIN #1) CONG LOAD PSW L
  OCTAL DECIMAL             ********          OCTAL
ADDRESS ADDRESS   EDCBA     ********          DATA
   000      0     00000     11111111          377
   001      1     00001     11111111          377
   002      2     00010     11111111          377
   003      3     00011     11111111          377
   004      4     00100     01111110          176       PSW ,TRAN OUT BA=177776
   005      5     00101     11111111          377       PSW ,TRAN OUT,BAR
   006      6     00110     01111011          173       LCLK ,TRANOUT
   007      7     00111     11111111          377       LCLK ,TRANOUT,BAR
   010      8     01000     00111101          075       GR<R0|R17> ,TRANOUT BA=1777XX
   011      9     01001     10111111          277       GR<R0|R17> ,TRANOUT,BAR
   012     10     01010     01111111          177       ODD BYTE (LCLK/TK/TP)
   013     11     01011     11111111          377
   014     12     01100     11111111          377
   015     13     01101     11111111          377
   016     14     01110     01111111          177       SWR ,TRANOUT BA=177570
   017     15     01111     11111111          377       SWR ,TRANOUT,BAR
   020     16     10000     01010111          127       TKS ,TRANOUT BA=177560
   021     17     10001     11011111          337       TKS ,TRANOUT,BAR
   022     18     10010     01100111          147       TPS ,TRANOUT BA=177564
   023     19     10011     11101111          357       TPS ,TRANOUT,BAR
   024     20     10100     01011111          137       TKB ,TRANOUT BA=177562
   025     21     10101     11011111          337       TKB ,TRANOUT,BAR
   026     22     10110     01101111          157       TPB ,TRANOUT BA=177566
   027     23     10111     11101111          357       TPB ,TRANOUT,BAR
   030     24     11000     11111111          377
   031     25     11001     11111111          377
   032     26     11010     11111111          377
   033     27     11011     11111111          377
   034     28     11100     11111111          377
   035     29     11101     11111111          377
   036     30     11110     11111111          377
   037     31     11111     11111111          377
                  *****
                  ****/( A(PIN #10) IS  CONA TRAN OUT L
                  ***/( B(PIN #11) IS  Y3 OF F025
                  **/( C(PIN #12) IS  Y2 OF F025
                  */( D(PIN #13) IS  Y1 OF F025
                  /( E(PIN #14) IS  Y4 OF F025
```



```
                    /( =Y8 (PIN #9) CONA ENAB L CLK PSW L
                    */( =Y7 (PIN #7) CONA INT TRAN SYNC L
                    **/( =Y6 (PIN #6) CONA ENAB ALU L
                    ***/( =Y5 (PIN #5) CONA ENAB MODEM PSW L
                    ****/( =Y4 (PIN #4) CONA ENAB SWITCH REG L
                    *****/( =Y3 (PIN #3) CONG ENAB SPL L
                    ******/( =Y2 (PIN #2) CONG ENAB SPR L
                    *******/( =Y1 (PIN #1) CONG ENAB PSW L
  OCTAL DECIMAL             ********          OCTAL
ADDRESS ADDRESS   EDCBA     ********          DATA
   000      0     00000     11111111          377
   001      1     00001     11111111          377
   002      2     00010     11111111          377
   003      3     00011     11111111          377
   004      4     00100     10011110          236       PSW ,TRANIN BA=177776
   005      5     00101     11111111          377       PSW ,TRANIN,BAR
   006      6     00110     00111111          077       LCLK ,TRANIN BA=177546
   007      7     00111     11111111          377       LCLK ,TRANIN,BAR
   010      8     01000     10011001          231       GEN REG, ,TRANIN BA=1777XX
   011      9     01001     11111111          377       GEN REG ,TRANIN,BAR
   012     10     01010     10111111          277       ODD BYTE ADDRESS (LCLK/TK/TP)
   013     11     01011     11111111          377
   014     12     01100     11111111          377
   015     13     01101     11111111          377
   016     14     01110     10010111          227       SWR ,TRANIN BA=177570
   017     15     01111     11111111          377       SWR ,TRANIN,BAR
   020     16     10000     10001111          217       TKS ,TRANIN BA=177560
   021     17     10001     11111111          377       TKS ,TRANIN,BAR
   022     18     10010     10001111          217       TPS ,TRANIN BA=177564
   023     19     10011     11111111          377       TPS ,TRANIN,BAR
   024     20     10100     10011111          237       TKB ,TRANIN BA=177562
   025     21     10101     11111111          377       TKB ,TRANIN,BAR
   026     22     10110     10011111          237       TPB ,TRANIN BA=177566
   027     23     10111     11111111          377       TPB ,TRANIN,BAR
   030     24     11000     11111111          377
   031     25     11001     11111111          377
   032     26     11010     11111111          377
   033     27     11011     11111111          377
   034     28     11100     11111111          377
   035     29     11101     11111111          377
   036     30     11110     11111111          377
   037     31     11111     11111111          377
                  *****
                  ****/( A(PIN #10) IS  CONA TRAN IN L
                  ***/( B(PIN #11) IS  Y3 OF F025
                  **/( C(PIN #12) IS  Y2 OF F025
                  */( D(PIN #13) IS  Y1 OF F025
                  /( E(PIN #14) IS  Y4 OF F025
```

```
                        /( =Y8 (PIN #9)
                        */( =Y7 (PIN #7) CONE LINE CLOCK SER L
                        **/( =Y6 (PIN #6) CONE STACK FLOW L
                        ***/( =Y5 (PIN #5) CONE PWR FAIL SER L
                        ****/( =Y4 (PIN #4) CONE RCD SER L
                        *****/( =Y3 (PIN #3) CONE XMIT SER L
                        ******/( =Y2 (PIN #2)
                        *******/( =Y1 (PIN #1)
  OCTAL DECIMAL         ********        OCTAL
ADDRESS ADDRESS  EDCBA  ********        DATA
   000      0    00000  11111111        377
   001      1    00001  11111111        377
   002      2    00010  11111111        377
   003      3    00011  11111111        377
   004      4    00100  11111111        377
   005      5    00101  11111111        377
   006      6    00110  11111111        377
   007      7    00111  11111111        377
   010      8    01000  11111111        377
   011      9    01001  11111111        377
   012     10    01010  11110111        367     UART RCD INT MPC=64
   013     11    01011  11111111        377
   014     12    01100  11111111        377
   015     13    01101  11111111        377
   016     14    01110  11111011        373     UART XMIT INT MPC=60
   017     15    01111  11111111        377
   020     16    10000  11111111        377
   021     17    10001  11111111        377
   022     18    10010  11011111        337     ERT=1A STACK FLOW MPC=46
   023     19    10011  11111111        377
   024     20    10100  11101111        357     PWR FAIL MPC=43
   025     21    10101  11111111        377
   026     22    10110  10111111        277     LINE CLK INT MPC=42
   027     23    10111  11111111        377
   030     24    11000  11111111        377
   031     25    11001  11111111        377
   032     26    11010  11111111        377
   033     27    11011  11111111        377
   034     28    11100  11111111        377
   035     29    11101  11111111        377
   036     30    11110  11111111        377
   037     31    11111  11111111        377
                 *****
                 ****/( A(PIN #10) IS  CONH RUN GND L
                 ***/( B(PIN #11) IS  CONF MPC 00 L
                 **/( C(PIN #12) IS  CONF MPC 02 L
                 */( D(PIN #13) IS  CONF MPC 01 L
                 /( E(PIN #14) IS  CONF MPC 04 L
```



```
                        /( =Y8 (PIN #9) CONF MPC 05 L
                        */( =Y7 (PIN #7) CONE EXAM SW L
                        **/( =Y6 (PIN #6) CONE DEP SW L
                        ***/( =Y5 (PIN #5) CONF MPC 00 L
                        ****/( =Y4 (PIN #4) CONF MPC 04 L
                        *****/( =Y3 (PIN #3) CONF MPC 01 L
                        ******/( =Y2 (PIN #2) CONF MPC 02 L
                        *******/( =Y1 (PIN #1) CONF MPC 03 L
  OCTAL DECIMAL         ********        OCTAL
ADDRESS ADDRESS  EDCBA  ********        DATA
   000      0    00000  11111000        370     CONTINUE
   001      1    00001  11111011        373     TWO SW =CONT,DEP
   002      2    00010  11111011        373     TWO SW EXAM,CONT
   003      3    00011  11111011        373     TWO SW LOAD,CONT
   004      4    00100  11111011        373     NO SW
   005      5    00101  11001010        312     DEP SW1 GOTO 313
   006      6    00110  10101000        250     EXAM GOTO TO 317
   007      7    00111  11101110        356     LOAD  GOTO TO 311
   010      8    01000  11111000        370     CONT=CLR EXAM
   011      9    01001  11111011        373     TWO SW =CONT,DEP
   012     10    01010  11101011        353     TWO SW EXAM,CONT
   013     11    01011  11101011        353     TWO SW LOAD,CONT
   014     12    01100  10111011        273     NO SW 1ST EXAM
   015     13    01101  11001010        312     DEP SW1
   016     14    01110  10101100        254     EXAM AND 1ST EXAM 323
   017     15    01111  11101110        356     LOAD GOTO 311
   020     16    10000  11111000        370     CONT=CLR DEP
   021     17    10001  11111011        373     TWO SW =CONT,DEP
   022     18    10010  11111011        373     TWO SW EXAM,CONT
   023     19    10011  11011011        333     TWO SW LOAD,CONT
   024     20    10100  11011011        333     NO SW 1ST DEP
   025     21    10101  11011010        332     DEP SW2 GOTO 312
   026     22    10110  10101000        250     EXAM,1ST DEP 317
   027     23    10111  11101110        356     LOAD GOTO 311
   030     24    11000  00000100        004
   031     25    11001  00000000        000
   032     26    11010  00000000        000
   033     27    11011  00000000        000
   034     28    11100  00000000        000
   035     29    11101  00000000        000
   036     30    11110  00000000        000
   037     31    11111  00000000        000
                 *****
                 ****/( A(PIN #10) IS  CONE LOAD (1)L ,AND, DEP (1)L ;BAR
                 ***/( B(PIN #11) IS  CONE LOAD (1)L ;AND, EXAM (1)L ;BAR
                 **/( C(PIN #12) IS  CONE CONT (1)L
                 */( D(PIN #13) IS  CONE 1ST EXAM (1)H
                 /( E(PIN #14) IS  CONE 1ST DEP (1)H
```

6

```
                                /( =Y4 (PIN # 9) CONC SET BG 07 L
                                */( =Y3 (PIN #10) CONC SET BG 06 L
                                **/( =Y2 (PIN #11) CONC SET BG 05 L
                                ***/( =Y1 (PIN #12) CONC SET BG 04 L
  OCTAL DECIMAL                 ****          OCTAL
ADDRESS ADDRESS   HGFEDCBA      ****          DATA
    000       0   00000000      1111          017
    001       1   00000001      1111          017
    002       2   00000010      1111          017
    003       3   00000011      1111          017
    004       4   00000100      1111          017
    005       5   00000101      1111          017
    006       6   00000110      1111          017
    007       7   00000111      1111          017
    010       8   00001000      1111          017
    011       9   00001001      1111          017
    012      10   00001010      1111          017
    013      11   00001011      1111          017
    014      12   00001100      1111          017
    015      13   00001101      1111          017
    016      14   00001110      1111          017
    017      15   00001111      1111          017
    020      16   00010000      1111          017
    021      17   00010001      1111          017
    022      18   00010010      1111          017
    023      19   00010011      1111          017
    024      20   00010100      1111          017
    025      21   00010101      1111          017
    026      22   00010110      1111          017
    027      23   00010111      1111          017
    030      24   00011000      1111          017
    031      25   00011001      1111          017
    032      26   00011010      1111          017
    033      27   00011011      1111          017
    034      28   00011100      1111          017
    035      29   00011101      1111          017
    036      30   00011110      1111          017
    037      31   00011111      1111          017
```

M7261-8 REV A

Cont

```
    040      32   00100000      0111          007
    041      33   00100001      1011          013
    042      34   00100010      0111          007
    043      35   00100011      1111          017       L.CLK
    044      36   00100100      0111          007
    045      37   00100101      1011          013
    046      38   00100110      0111          007
    047      39   00100111      1101          015
    050      40   00101000      0111          007
    051      41   00101001      1011          013
    052      42   00101010      0111          007
    053      43   00101011      1111          017
    054      44   00101100      0111          007
    055      45   00101101      1011          013
    056      46   00101110      0111          007
    057      47   00101111      1110          016
    060      48   00110000      0111          007
    061      49   00110001      1011          013
    062      50   00110010      0111          007
    063      51   00110011      1111          017       LCLK
    064      52   00110100      0111          007
    065      53   00110101      1011          013
    066      54   00110110      0111          007
    067      55   00110111      1101          015
    070      56   00111000      0111          007
    071      57   00111001      1011          013
    072      58   00111010      0111          007
    073      59   00111011      1111          017
    074      60   00111100      0111          007
    075      61   00111101      1011          013
    076      62   00111110      0111          007
    077      63   00111111      1111          017
                 ********
                 ********/( A(PIN #05) IS  CONC BR 07 (1)L
                 *******/( B(PIN #06) IS  CONC BR 06 (1)L
                 ******/( C(PIN #07) IS  CONI LCLK INT L
                 ****/( D(PIN #04) IS  CONC BR 05 (1)L
                 ***/( E(PIN #03) IS  CONC BR 04 (1)L
                 **/( F(PIN #02) IS  DPE PSW 07 (0)H
                 */( G(PIN #01) IS  DPE PSW 06 (0)H
                 /( H(PIN #15) IS  DPE PSW 05 (0)H
```

```
                                /( =Y4 (PIN # 9) CONC SET BG 07 L
                                +/( =Y3 (PIN #10) CONC SET BG 06 L
                                ++/( =Y2 (PIN #11) CONC SET BG 05 L
                                +++/( =Y1 (PIN #12) CONC SET BG 04 L
  OCTAL DECIMAL                 ++++            OCTAL
ADDRESS ADDRESS   HGFEDCBA      ++++            DATA
    100      64   01000000      0111            007
    101      65   01000001      1011            013
    102      66   01000010      0111            007
    103      67   01000011      1111            017
    104      68   01000100      0111            007
    105      69   01000101      1011            013
    106      70   01000110      0111            007
    107      71   01000111      1111            017
    110      72   01001000      0111            007
    111      73   01001001      1011            013
    112      74   01001010      0111            007
    113      75   01001011      1111            017
    114      76   01001100      0111            007
    115      77   01001101      1011            013
    116      78   01001110      0111            007
    117      79   01001111      1111            017
    120      80   01010000      0111            007
    121      81   01010001      1011            013
    122      82   01010010      0111            007
    123      83   01010011      1111            017
    124      84   01010100      0111            007
    125      85   01010101      1011            013
    126      86   01010110      0111            007
    127      87   01010111      1111            017
    130(     88   01011000      0111            007
    131      89   01011001      1011            013
    132      90   01011010      0111            007
    133      91   01011011      1111            017
    134      92   01011100      0111            007
    135      93   01011101      1011            013
    136      94   01011110      0111            007
    137      95   01011111      1111            017
```

M7261-8 REV A

```
    140      96   01100000      0111            007
    141      97   01100001      1011            013
    142      98   01100010      0111            007
    143      99   01100011      1111            017       LCLK
    144     100   01100100      0111            007
    145     101   01100101      1011            013
    146     102   01100110      0111            007
    147     103   01100111      1101            015
    150     104   01101000      0111            007
    151     105   01101001      1111            017
    152     106   01101010      0111            007
    153     107   01101011      1111            017       LCLK
    154     108   01101100      0111            007
    155     109   01101101      1011            013
    156     110   01101110      0111            007
    157     111   01101111      1110            016
    160     112   01110000      0111            007
    161     113   01110001      1011            013
    162     114   01110010      0111            007
    163     115   01110011      1111            017       LCLK
    164     116   01110100      0111            007
    165     117   01110101      1011            013
    166     118   01110110      0111            007
    167     119   01110111      1101            015
    170     120   01111000      0111            007
    171     121   01111001      1011            013
    172     122   01111010      0111            007
    173     123   01111011      1111            017
    174     124   01111100      0111            007
    175     125   01111101      1011            013
    176     126   01111110      0111            007
    177     127   01111111      1111            017
                  ++++++++
                  ++++++++/( A(PIN #05) IS  CONC BR 07 (1)L
                  +++++++/( B(PIN #06) IS  CONC BR 06 (1)L
                  ++++++/( C(PIN #07) IS  CONI LCLK INT L
                  +++++/( D(PIN #04) IS  CONC BR 05 (1)L
                  ++++/( E(PIN #03) IS  CONC BR 04 (1)L
                  +++/( F(PIN #02) IS  DPE PSW 07 (0)H
                  ++/( G(PIN #01) IS  DPE PSW 06 (0)H
                  +/( H(PIN #15) IS  DPE PSW 05 (0)H
```

```
                                /( =Y4 (PIN # 9) CONC SET BG 07 L
                                */( =Y3 (PIN #10) CONC SET BG 06 L
                                **/( =Y2 (PIN #11) CONC SET BG 05 L
                                ***/( =Y1 (PIN #12) CONC SET BG 04 L
  OCTAL DECIMAL                 ****          OCTAL
ADDRESS ADDRESS   HGFEDCBA      ****          DATA
    200     128   10000000      0111          007
    201     129   10000001      1111          017
    202     130   10000010      0111          007
    203     131   10000011      1111          017
    204     132   10000100      0111          007
    205     133   10000101      1111          017
    206     134   10000110      0111          007
    207     135   10000111      1111          017
    210     136   10001000      0111          007
    211     137   10001001      1111          017
    212     138   10001010      0111          007
    213     139   10001011      1111          017
    214     140   10001100      0111          007
    215     141   10001101      1111          017
    216     142   10001110      0111          007
    217     143   10001111      1111          017
    220     144   10010000      0111          007
    221     145   10010001      1111          017
    222     146   10010010      0111          007
    223     147   10010011      1111          017
    224     148   10010100      0111          007
    225     149   10010101      1111          017
    226     150   10010110      0111          007
    227     151   10010111      1111          017
    230     152   10011000      0111          007
    231     153   10011001      1111          017
    232     154   10011010      0111          007
    233     155   10011011      1111          017
    234     156   10011100      0111          007
    235     157   10011101      1111          017
    236     158   10011110      0111          007
    237     159   10011111      1111          017

M7261-8 Rev A

    240     160   10100000      0111          007
    241     161   10100001      1011          013
    242     162   10100010      0111          007
    243     163   10100011      1111          017       LCLK
    244     164   10100100      0111          007
    245     165   10100101      1011          013
    246     166   10100110      0111          007
    247     167   10100111      1101          015
    250     168   10101000      0111          007
    251     169   10101001      1011          013
    252     170   10101010      0111          007
    253     171   10101011      1111          017       LCLK
    254     172   10101100      0111          007
    255     173   10101101      1011          013
    256     174   10101110      0111          007
    257     175   10101111      1110          016
    260     176   10110000      0111          007
    261     177   10110001      1011          013
    262     178   10110010      0111          007
    263     179   10110011      1111          017       LCLK
    264     180   10110100      0111          007
    265     181   10110101      1011          013
    266     182   10110110      0111          007
    267     183   10110111      1101          015
    270     184   10111000      0111          007
    271     185   10111001      1011          013
    272     186   10111010      0111          007
    273     187   10111011      1111          017
    274     188   10111100      0111          007
    275     189   10111101      1011          013
    276     190   10111110      0111          007
    277     191   10111111      1111          017
                  ********
                  *******/( A(PIN #05) IS  CONC BR 07 (1)L
                  *******/( B(PIN #06) IS  CONC BR 06 (1)L
                  *****/( C(PIN #07) IS  CONI LCLK INT L
                  ****/( D(PIN #04) IS  CONC BR 05 (1)L
                  ***/( E(PIN #03) IS  CONC BR 04 (1)L
                  **/( F(PIN #02) IS  DPE PSW 07 (0)H
                  */( G(PIN #01) IS  DPE PSW 06 (0)H
                  /( H(PIN #15) IS  DPE PSW 05 (0)H
```

```
                                /( =Y4 (PIN # 9) CONC SET BG 07 L
                                */( =Y3 (PIN #10) CONC SET BG 06 L
                                **/( =Y2 (PIN #11) CONC SET BG 05 L
                                ***/( =Y1 (PIN #12) CONC SET BG 04 L
  OCTAL DECIMAL                 ****          OCTAL
ADDRESS ADDRESS   HGFEDCBA      ****          DATA
    300     192   11000000      0111          007
    301     193   11000001      1011          013
    302     194   11000010      0111          007
    303     195   11000011      1111          017       LCLK
    304     196   11000100      0111          007
    305     197   11000101      1011          013
    306     198   11000110      0111          007
    307     199   11000111      1101          015
    310     200   11001000      0111          007
    311     201   11001001      1011          013
    312     202   11001010      0111          007
    313     203   11001011      1111          017       LCLK
    314     204   11001100      0111          007
    315     205   11001101      1011          013
    316     206   11001110      0111          007
    317     207   11001111      1111          017
    320     208   11010000      0111          007
    321     209   11010001      1011          013
    322     210   11010010      0111          007
    323     211   11010011      1111          017       LCLK
    324     212   11010100      0111          007
    325     213   11010101      1011          013
    326     214   11010110      0111          007
    327     215   11010111      1101          015
    330     216   11011000      0111          007
    331     217   11011001      1011          013
    332     218   11011010      0111          007
    333     219   11011011      1111          017
    334     220   11011100      0111          007
    335     221   11011101      1011          013
    336     222   11011110      0111          007
    337     223   11011111      1111          017
```

M7261-8 REV A

```
    340     224   11100000      0111          007
    341     225   11100001      1011          013
    342     226   11100010      0111          007
    343     227   11100011      1111          017       LCLK
    344     228   11100100      0111          007
    345     229   11100101      1011          013
    346     230   11100110      0111          007
    347     231   11100111      1101          015
    350     232   11101000      0111          007
    351     233   11101001      1011          013
    352     234   11101010      0111          007
    353     235   11101011      1111          017       LCLK
    354     236   11101100      0111          007
    355     237   11101101      1011          013
    356     238   11101110      0111          007
    357     239   11101111      1110          016
    360     240   11110000      0111          007
    361     241   11110001      1011          013
    362     242   11110010      0111          007
    363     243   11110011      1111          017       LCLK
    364     244   11110100      0111          007
    365     245   11110101      1011          013
    366     246   11110110      0111          007
    367     247   11110111      1101          015
    370     248   11111000      0111          007
    371     249   11111001      1011          013
    372     250   11111010      0111          007
    373     251   11111011      1111          017
    374     252   11111100      0111          007
    375     253   11111101      1011          013
    376     254   11111110      0111          007
    377     255   11111111      1111          017
                  ********
                  *******/( A(PIN #05) IS  CONC BR 07 (1)L
                  ******/( B(PIN #06) IS  CONC BR 06 (1)L
                  *****/( C(PIN #07) IS  CONI LCLK INT L
                  ****/( D(PIN #04) IS  CONC BR 05 (1)L
                  ***/( E(PIN #03) IS  CONC BR 04 (1)L
                  **/( F(PIN #02) IS  DPE PSW 07 (0)H
                  */( G(PIN #01) IS  DPE PSW 06 (0)H
                  /( H(PIN #15) IS  DPE PSW 05 (0)H
```

OCTAL ADDRESS	DECIMAL ADDRESS	HGFEDCBA		
			/(=Y4 (PIN # 9) Y4	
			*/(=Y3 (PIN #10) Y3	
			**/(=Y2 (PIN #11) Y2	
			***/(=Y1 (PIN #12) Y1	
			****	OCTAL
			****	DATA
000	0	00000000	0000	000
001	1	00000001	0000	000
002	2	00000010	0000	000
003	3	00000011	0000	000
004	4	00000100	0000	000
005	5	00000101	0000	000
006	6	00000110	0000	000
007	7	00000111	0000	000
010	8	00001000	0000	000
011	9	00001001	0000	000
012	10	00001010	0000	000
013	11	00001011	0000	000
014	12	00001100	0000	000
015	13	00001101	0000	000
016	14	00001110	0000	000
017	15	00001111	0000	000
020	16	00010000	0000	000
021	17	00010001	0000	000
022	18	00010010	0000	000
023	19	00010011	0000	000
024	20	00010100	0000	000
025	21	00010101	0000	000
026	22	00010110	0000	000
027	23	00010111	0000	000
030	24	00011000	0000	000
031	25	00011001	0000	000
032	26	00011010	0000	000
033	27	00011011	0000	000
034	28	00011100	0000	000
035	29	00011101	0000	000
036	30	00011110	0000	000
037	31	00011111	0000	000

M7261-8 REV A

040	32	00100000	0000	000
041	33	00100001	0000	000
042	34	00100010	0000	000
043	35	00100011	0000	000
044	36	00100100	0000	000
045	37	00100101	0000	000
046	38	00100110	0000	000
047	39	00100111	0000	000
050	40	00101000	0000	000
051	41	00101001	0000	000
052	42	00101010	0000	000
053	43	00101011	0000	000
054	44	00101100	0000	000
055	45	00101101	0000	000
056	46	00101110	0000	000
057	47	00101111	0000	000
060	48	00110000	0000	000
061	49	00110001	0000	000
062	50	00110010	0000	000
063	51	00110011	0000	000
064	52	00110100	0000	000
065	53	00110101	0000	000
066	54	00110110	0000	000
067	55	00110111	0000	000
070	56	00111000	0000	000
071	57	00111001	0000	000
072	58	00111010	0000	000
073	59	00111011	0000	000
074	60	00111100	0000	000
075	61	00111101	0000	000
076	62	00111110	0000	000
077	63	00111111	0000	000

```
        ********
        *******/( A(PIN #05) IS  CONA BA 02 (1)H
        ******/( B(PIN #06) IS  CONA BA 01 (1)H
        *****/( C(PIN #07) IS  CONA BA 00 (1)H
        ****/( D(PIN #04) IS  CONA BA 03 (1)H
        ***/( E(PIN #03) IS  CONA BA 04 (1)H
        **/( F(PIN #02) IS  CONA BA 05 (1)H
        */( G(PIN #01) IS  CONA BA 07 (1)H
        /( H(PIN #15) IS  CONA BA 06 (1)H
```

```
                                /( =Y4 (PIN # 9) Y4
                                +/( =Y3 (PIN #10) Y3
                                ++/( =Y2 (PIN #11) Y2
                                +++/( =Y1 (PIN #12) Y1
  OCTAL DECIMAL                 ++++          OCTAL
ADDRESS ADDRESS    HGFEDCBA     ++++          DATA
    100      64    01000000     0000          000
    101      65    01000001     0000          000
    102      66    01000010     0000          000
    103      67    01000011     0000          000
    104      68    01000100     0000          000
    105      69    01000101     0000          000
    106      70    01000110     0000          000
    107      71    01000111     0000          000
    110      72    01001000     0000          000
    111      73    01001001     0000          000
    112      74    01001010     0000          000
    113      75    01001011     0000          000
    114      76    01001100     0000          000
    115      77    01001101     0000          000
    116      78    01001110     0000          000
    117      79    01001111     0000          000
    120      80    01010000     0000          000
    121      81    01010001     0000          000
    122      82    01010010     0000          000
    123      83    01010011     0000          000
    124      84    01010100     0000          000
    125      85    01010101     0000          000
    126      86    01010110     0000          000
    127      87    01010111     0000          000
    130      88    01011000     0000          000
    131      89    01011001     0000          000
    132      90    01011010     0000          000
    133      91    01011011     0000          000
    134      92    01011100     0000          000
    135      93    01011101     0000          000
    136      94    01011110     0000          000
    137      95    01011111     0000          000
```

M7261-8 REV A

```
    140      96    01100000     0000          000
    141      97    01100001     0000          000
    142      98    01100010     0000          000
    143      99    01100011     0000          000
    144     100    01100100     0000          000
    145     101    01100101     0000          000
    146     102    01100110     0000          000
    147     103    01100111     0000          000
    150     104    01101000     0000          000
    151     105    01101001     0000          000
    152     106    01101010     0000          000
    153     107    01101011     0000          000
    154     108    01101100     0000          000
    155     109    01101101     0000          000
    156     110    01101110     0000          000
    157     111    01101111     0000          000
    160     112    01110000     0000          000
    161     113    01110001     0000          000
    162     114    01110010     0000          000
    163     115    01110011     0000          000
    164     116    01110100     0000          000
    165     117    01110101     0000          000
    166     118    01110110     0000          000
    167     119    01110111     0000          000
    170     120    01111000     0000          000
    171     121    01111001     0000          000
    172     122    01111010     0000          000
    173     123    01111011     0000          000
    174     124    01111100     0000          000
    175     125    01111101     0000          000
    176     126    01111110     0000          000
    177     127    01111111     0000          000
                   ++++++++
                   +++++++/( A(PIN #05) IS  CONA BA 02 (1)H
                   ++++++/( B(PIN #06) IS  CONA BA 01 (1)H
                   +++++/( C(PIN #07) IS  CONA BA 00 (1)H
                   ++++/( D(PIN #04) IS  CONA BA 03 (1)H
                   +++/( E(PIN #03) IS  CONA BA 04 (1)H
                   ++/( F(PIN #02) IS  CONA BA 05 (1)H
                   +/( G(PIN #01) IS  CONA BA 07 (1)H
                   /( H(PIN #15) IS  CONA BA 06 (1)H
```

```
                                /( #Y4 (PIN # 9) Y4
                                #/( #Y3 (PIN #10) Y3
                                ##/( #Y2 (PIN #11) Y2
                                ###/( #Y1 (PIN #12) Y1
                                ####            OCTAL
  OCTAL DECIMAL                 ####            DATA
ADDRESS ADDRESS   HGFEDCBA      ####
    200     128   10000000      0000            000
    201     129   10000001      0000            000
    202     130   10000010      0000            000
    203     131   10000011      0000            000
    204     132   10000100      0000            000
    205     133   10000101      0000            000
    206     134   10000110      0000            000
    207     135   10000111      0000            000
    210     136   10001000      0000            000
    211     137   10001001      0000            000
    212     138   10001010      0000            000
    213     139   10001011      0000            000
    214     140   10001100      0000            000
    215     141   10001101      0000            000
    216     142   10001110      0000            000
    217     143   10001111      0000            000
    220     144   10010000      0000            000
    221     145   10010001      0000            000
    222     146   10010010      0000            000
    223     147   10010011      0000            000
    224     148   10010100      0000            000
    225     149   10010101      0000            000
    226     150   10010110      0000            000
    227     151   10010111      0000            000
    230     152   10011000      0000            000
    231     153   10011001      0000            000
    232     154   10011010      0000            000
    233     155   10011011      0000            000
    234     156   10011100      0000            000
    235     157   10011101      0000            000
    236     158   10011110      0000            000
    237     159   10011111      0000            000

    240     160   10100000      0000            000
    241     161   10100001      0000            000
    242     162   10100010      0000            000
    243     163   10100011      0110            006     KW11#L LINE CLK CSR
    244     164   10100100      0000            000
    245     165   10100101      0000            000
    246     166   10100110      0000            000
    247     167   10100111      0101            005     KW11#L (ODD BYTE)
    250     168   10101000      0000            000
    251     169   10101001      0000            000
    252     170   10101010      0000            000
    253     171   10101011      0000            000
    254     172   10101100      0000            000
    255     173   10101101      0000            000
    256     174   10101110      0000            000
    257     175   10101111      0000            000
    260     176   10110000      1000            010     TKS TTY KEYBOARD CSR
    261     177   10110001      1100            014     TPS PRINTER CSR
    262     178   10110010      1010            012     TKB TTY KEYBOARD  DBR
    263     179   10110011      1110            016     TPB TTY PRINTER DBR
    264     180   10110100      0101            005     TKS (ODD BYTE)
    265     181   10110101      0101            005     TPS (ODD BYTE)
    266     182   10110110      0101            005     TKB (ODD BYTE)
    267     183   10110111      0101            005     TPB (ODD BYTE)
    270     184   10111000      0111            007     SWITCH REGISTER
    271     185   10111001      0000            000
    272     186   10111010      0000            000
    273     187   10111011      0000            000
    274     188   10111100      0111            007     CONSOLE SW REG, (ODD BYTE)
    275     189   10111101      0000            000
    276     190   10111110      0000            000
    277     191   10111111      0000            000
                  ########
                  ########/( A(PIN #05) IS  CONA BA 02 (1)H
                  ######/( B(PIN #06) IS  CONA BA 01 (1)H
                  #####/( C(PIN #07) IS  CONA BA 00 (1)H
                  ####/( D(PIN #04) IS  CONA BA 03 (1)H
                  ###/( E(PIN #03) IS  CONA BA 04 (1)H
                  ##/( F(PIN #02) IS  CONA BA 05 (1)H
                  #/( G(PIN #01) IS  CONA BA 07 (1)H
                  /( H(PIN #15) IS  CONA BA 06 (1)H
```

```
                /( =V4 (PIN # 9) V4
                */( =V3 (PIN #10) V3
                **/( =V2 (PIN #11) V2
                ***/( =V1 (PIN #12) V1
OCTAL DECIMAL   ****  OCTAL
ADDRESS ADDRESS HGFEDCBA  ****  DATA
300  192  11000000  0001  001  REG R0
301  193  11000001  0001  001  REG R4
302  194  11000010  0001  001  REG R2
303  195  11000011  0001  001  REG R6
304  196  11000100  0001  001  REG R1
305  197  11000101  0001  001  REG R5
306  198  11000110  0001  001  REG R3
307  199  11000111  0001  001  REG R7
310  200  11001000  0001  001  REG R10
311  201  11001001  0001  001  REG R14
312  202  11001010  0001  001  REG R12
313  203  11001011  0001  001  REG R16
314  204  11001100  0001  001  REG R11
315  205  11001101  0001  001  REG R15
316  206  11001110  0001  001  REG R13
317  207  11001111  0001  001  REG R17
320  208  11010000  0000  000
321  209  11010001  0000  000
322  210  11010010  0000  000
323  211  11010011  0000  000
324  212  11010100  0000  000
325  213  11010101  0000  000
326  214  11010110  0000  000
327  215  11010111  0000  000
330  216  11011000  0000  000
331  217  11011001  0000  000
332  218  11011010  0000  000
333  219  11011011  0000  000
334  220  11011100  0000  000
335  221  11011101  0000  000
336  222  11011110  0000  000
337  223  11011111  0000  000
340  224  11100000  0000  000
341  225  11100001  0000  000
342  226  11100010  0000  000
343  227  11100011  0000  000
344  228  11100100  0000  000
345  229  11100101  0000  000
346  230  11100110  0000  000
347  231  11100111  0000  000
350  232  11101000  0000  000
351  233  11101001  0000  000
352  234  11101010  0000  000
353  235  11101011  0000  000
354  236  11101100  0000  000
355  237  11101101  0000  000
356  238  11101110  0000  000
357  239  11101111  0000  000
360  240  11110000  0000  000
361  241  11110001  0000  000
362  242  11110010  0000  000
363  243  11110011  0000  000
364  244  11110100  0000  000
365  245  11110101  0000  000
366  246  11110110  0000  000
367  247  11110111  0000  000
370  248  11111000  0000  000
371  249  11111001  0000  000
372  250  11111010  0000  000
373  251  11111011  0010  002  PSW
374  252  11111100  0000  000
375  253  11111101  0000  000
376  254  11111110  0000  000
377  255  11111111  0010  002  PSW (ODD BYTE)
                ********
                ********/( A(PIN #05) IS  CONA BA 02 (1)H
                *******/( B(PIN #06) IS  CONA BA 01 (1)H
                ******/( C(PIN #07) IS  CONA BA 00 (1)H
                *****/( D(PIN #04) IS  CONA BA 03 (1)H
                ****/( E(PIN #03) IS  CONA BA 04 (1)H
                ***/( F(PIN #02) IS  CONA BA 05 (1)H
                **/( G(PIN #01) IS  CONA BA 07 (1)H
                */( H(PIN #15) IS  CONA BA 06 (1)H
```

M7261-8 REV A

```
                                    /( =Y4 (PIN # 9) CONF MPC 04 L
                                    */( =Y3 (PIN #10) CONF MPC 01 L
                                    **/( =Y2 (PIN #11) CONF MPC 02 L
                                    ***/( =Y1 (PIN #12) CONF MPC 00 L
  OCTAL DECIMAL                     ****          OCTAL
ADDRESS ADDRESS   HGFEDCBA          ****          DATA
    000       0   00000000          1100          014       T
    001       1   00000001          1100          014       T
    002       2   00000010          1100          014       T
    003       3   00000011          1100          014       T
    004       4   00000100          1100          014       T
    005       5   00000101          1100          014       T
    006       6   00000110          1100          014       T
    007       7   00000111          1100          014       T
    010       8   00001000          1100          014       T
    011       9   00001001          1100          014       T
    012      10   00001010          1100          014       T
    013      11   00001011          1100          014       T
    014      12   00001100          1100          014       T
    015      13   00001101          1100          014       T
    016      14   00001110          1100          014       T
    017      15   00001111          1100          014       T
    020      16   00010000          1100          014       T
    021      17   00010001          1100          014       T
    022      18   00010010          1100          014       T
    023      19   00010011          1100          014       T
    024      20   00010100          1100          014       T
    025      21   00010101          1100          014       T
    026      22   00010110          1100          014       T
    027      23   00010111          1100          014       T
    030      24   00011000          1100          014       T
    031      25   00011001          1100          014       T
    032      26   00011010          1100          014       T
    033      27   00011011          1100          014       T
    034      28   00011100          1100          014       T
    035      29   00011101          1100          014       T
    036      30   00011110          1100          014       T
    037      31   00011111          1100          014       T
```

M7261-8 REV A

```
    040      32   00100000          1100          014       T
    041      33   00100001          1100          014       T
    042      34   00100010          1100          014       T
    043      35   00100011          1100          014       T
    044      36   00100100          1100          014       T
    045      37   00100101          1100          014       T
    046      38   00100110          1100          014       T
    047      39   00100111          1100          014       T
    050      40   00101000          1100          014       T
    051      41   00101001          1100          014       T
    052      42   00101010          1100          014       T
    053      43   00101011          1100          014       T
    054      44   00101100          1100          014       T
    055      45   00101101          1100          014       T
    056      46   00101110          1100          014       T
    057      47   00101111          1100          014       T
    060      48   00110000          1100          014       T
    061      49   00110001          1100          014       T
    062      50   00110010          1100          014       T
    063      51   00110011          1100          014       T
    064      52   00110100          1100          014       T
    065      53   00110101          1100          014       T
    066      54   00110110          1100          014       T
    067      55   00110111          1100          014       T
    070      56   00111000          1100          014       T
    071      57   00111001          1100          014       T
    072      58   00111010          1100          014       T
    073      59   00111011          1100          014       T
    074      60   00111100          1100          014       T
    075      61   00111101          1100          014       T
    076      62   00111110          1100          014       T
    077      63   00111111          1100          014       T
                  ********
                  ********/( A(PIN #05) IS  CONB STACKFLOW (1)L
                  *******/( B(PIN #06) IS  CONH PDWN SYNC (1)L
                  ******/( C(PIN #07) IS  CONI LCLK INT (1)L
                  *****/( D(PIN #04) IS  CONE STOP (1)L
                  ****/( E(PIN #03) IS  DPH RCD INT (1)L
                  ***/( F(PIN #02) IS  DPH XMIT INT (1)L
                  **/( G(PIN #01) IS  DPG WAIT L
                  */( H(PIN #15) IS  DPE T DEL (1)L
```

```
                                    /( =Y4 (PIN # 9) CONF MPC 04 L
                                    */( =Y3 (PIN #10) CONF MPC 01 L
                                    **/( =Y2 (PIN #11) CONF MPC 02 L
                                    ***/( =Y1 (PIN #12) CONF MPC 00 L
  OCTAL DECIMAL                     ****          OCTAL
ADDRESS ADDRESS    HGFEDCBA         ****          DATA
    100      64    01000000         1100          014       T
    101      65    01000001         1100          014       T
    102      66    01000010         1100          014       T
    103      67    01000011         1100          014       T
    104      68    01000100         1100          014       T
    105      69    01000101         1100          014       T
    106      70    01000110         1100          014       T
    107      71    01000111         1100          014       T
    110      72    01001000         1100          014       T
    111      73    01001001         1100          014       T
    112      74    01001010         1100          014       T
    113      75    01001011         1100          014       T
    114      76    01001100         1100          014       T
    115      77    01001101         1100          014       T
    116      78    01001110         1100          014       T
    117      79    01001111         1100          014       T
    120      80    01010000         1100          014       T
    121      81    01010001         1100          014       T
    122      82    01010010         1100          014       T
    123      83    01010011         1100          014       T
    124      84    01010100         1100          014       T
    125      85    01010101         1100          014       T
    126      86    01010110         1100          014       T
    127      87    01010111         1100          014       T
    130      88    01011000         1100          014       T
    131      89    01011001         1100          014       T
    132      90    01011010         1100          014       T
    133      91    01011011         1100          014       T
    134      92    01011100         1100          014       T
    135      93    01011101         1100          014       T
    136      94    01011110         1100          014       T
    137      95    01011111         1100          014       T

    140      96    01100000         1100          014       T
    141      97    01100001         1100          014       T
    142      98    01100010         1100          014       T
    143      99    01100011         1100          014       T
    144     100    01100100         1100          014       T
    145     101    01100101         1100          014       T
    146     102    01100110         1100          014       T
    147     103    01100111         1100          014       T
    150     104    01101000         1100          014       T
    151     105    01101001         1100          014       T
    152     106    01101010         1100          014       T
    153     107    01101011         1100          014       T
    154     108    01101100         1100          014       T
    155     109    01101101         1100          014       T
    156     110    01101110         1100          014       T
    157     111    01101111         1100          014       T
    160     112    01110000         1100          014       T
    161     113    01110001         1100          014       T
    162     114    01110010         1100          014       T
    163     115    01110011         1100          014       T
    164     116    01110100         1100          014       T
    165     117    01110101         1100          014       T
    166     118    01110110         1100          014       T
    167     119    01110111         1100          014       T
    170     120    01111000         1100          014       T
    171     121    01111001         1100          014       T
    172     122    01111010         1100          014       T
    173     123    01111011         1100          014       T
    174     124    01111100         1100          014       T
    175     125    01111101         1100          014       T
    176     126    01111110         1100          014       T
    177     127    01111111         1100          014       T
                   ********
                   ********/( A(PIN #05) IS  CONB STACKFLOW (1)L
                   *******/( B(PIN #06) IS  CONH PDWN SYNC (1)L
                   ******/( C(PIN #07) IS  CONI LCLK INT (1)L
                   *****/( D(PIN #04) IS  CONE STOP (1)L
                   ****/( E(PIN #03) IS  DPH RCD INT (1)L
                   ***/( F(PIN #02) IS  DPH XMIT INT (1)L
                   **/( G(PIN #01) IS  DPG WAIT L
                   */( H(PIN #15) IS  DPE T DEL (1)L
```

```
                                /( =Y4 (PIN # 9) CONF MPC 04 L
                                +/( =Y3 (PIN #10) CONF MPC 01 L
                                ++/( =Y2 (PIN #11) CONF MPC 02 L
                                +++/( =Y1 (PIN #12) CONF MPC 00 L
  OCTAL DECIMAL                 ++++          OCTAL
ADDRESS ADDRESS   HGFEDCBA      ++++          DATA
    200     128   10000000      1001          011       STKFL
    201     129   10000001      1010          012       PWRF
    202     130   10000010      1001          011       STKFL
    203     131   10000011      1011          013       LCLK
    204     132   10000100      1001          011       STKFL
    205     133   10000101      1010          012       PWRF
    206     134   10000110      1001          011       STKFL
    207     135   10000111      0101          005       RCD
    210     136   10001000      1001          011       STKFL
    211     137   10001001      1010          012       PWRF
    212     138   10001010      1001          011       STKFL
    213     139   10001011      1011          013       LCLK
    214     140   10001100      1001          011       STKFL
    215     141   10001101      1010          012       PWRF
    216     142   10001110      1001          011       STKFL
    217     143   10001111      0101          005       RCD
    220     144   10010000      1001          011       STKFL
    221     145   10010001      1010          012       PWRF
    222     146   10010010      1001          011       STKFL
    223     147   10010011      1011          013       LCLK
    224     148   10010100      1001          011       STKFL
    225     149   10010101      1010          012       PWRF
    226     150   10010110      1001          011       STKFL
    227     151   10010111      0111          007       XMIT
    230     152   10011000      1001          011       STKFL
    231     153   10011001      1010          012       PWRF
    232     154   10011010      1001          011       STKFL
    233     155   10011011      1011          013       LCLK
    234     156   10011100      1001          011       STKFL
    235     157   10011101      1010          012       PWRF
    236     158   10011110      1001          011       STKFL
    237     159   10011111      0111          007       XMIT
```

M7261-8 REV A

```
    240     160   10100000      1001          011       STKFL
    241     161   10100001      1010          012       PWRF
    242     162   10100010      1001          011       STKFL
    243     163   10100011      1011          013       LCLK
    244     164   10100100      1001          011       STKFL
    245     165   10100101      1010          012       PWRF
    246     166   10100110      1001          011       STKFL
    247     167   10100111      0101          005       RCD
    250     168   10101000      1001          011       STKFL
    251     169   10101001      1010          012       PWRF
    252     170   10101010      1001          011       STKFL
    253     171   10101011      1011          013       LCLK
    254     172   10101100      1001          011       STKFL
    255     173   10101101      1010          012       PWRF
    256     174   10101110      1001          011       STKFL
    257     175   10101111      0101          005       RCD
    260     176   10110000      1001          011       STKFL
    261     177   10110001      1010          012       PWRF
    262     178   10110010      1001          011       STKFL
    263     179   10110011      1011          013       LCLK
    264     180   10110100      1001          011       STKFL
    265     181   10110101      1010          012       PWRF
    266     182   10110110      1001          011       STKFL
    267     183   10110111      1110          016       STOP
    270     184   10111000      1001          011       STKFL
    271     185   10111001      1010          012       PWRF
    272     186   10111010      1001          011       STKFL
    273     187   10111011      1011          013       LCLK
    274     188   10111100      1001          011       STKFL
    275     189   10111101      1010          012       PWRF
    276     190   10111110      1001          011       STKFL
    277     191   10111111      0010          002       WAIT
                  ++++++++
                  ++++++++/( A(PIN #05) IS  CONB STACKFLOW (1)L
                  +++++++/( B(PIN #06) IS  CONH PDWN SYNC (1)L
                  +++++/( C(PIN #07) IS  CONI LCLK INT (1)L
                  ++++/( D(PIN #04) IS  CONE STOP (1)L
                  +++/( E(PIN #03) IS  DPH RCD INT (1)L
                  ++/( F(PIN #02) IS  DPH XMIT INT (1)L
                  +/( G(PIN #01) IS  DPG WAIT L
                  /( H(PIN #15) IS  DPE T DEL (1)L
```

OCTAL ADDRESS	DECIMAL ADDRESS	HGFEDCBA	/(=Y4 (PIN # 9) CONF MPC Ø4 L */(=Y3 (PIN #10) CONF MPC Ø1 L **/(=Y2 (PIN #11) CONF MPC Ø2 L ***/(=Y1 (PIN #12) CONF MPC Ø0 L ****	OCTAL DATA	
300	192	11000000	1001	Ø11	STKFL
301	193	11000001	1010	Ø12	PWRF
302	194	11000010	1001	Ø11	STKFL
303	195	11000011	1011	Ø13	LCLK
304	196	11000100	1001	Ø11	STKFL
305	197	11000101	1010	Ø12	PWRF
306	198	11000110	1001	Ø11	STKFL
307	199	11000111	0101	Ø05	RCD
310	200	11001000	1001	Ø11	STKFL
311	201	11001001	1010	Ø12	PWRF
312	202	11001010	1001	Ø11	STKFL
313	203	11001011	1011	Ø13	LCLK
314	204	11001100	1001	Ø11	STKFL
315	205	11001101	1010	Ø12	PWRF
316	206	11001110	1001	Ø11	STKFL
317	207	11001111	0101	Ø05	RCD
320	208	11010000	1001	Ø11	STKFL
321	209	11010001	1010	Ø12	PWRF
322	210	11010010	1001	Ø11	STKFL
323	211	11010011	1011	Ø13	LCLK
324	212	11010100	1001	Ø11	STKFL
325	213	11010101	1010	Ø12	PWRF
326	214	11010110	1001	Ø11	STKFL
327	215	11010111	0111	Ø07	XMIT
330	216	11011000	1001	Ø11	STKFL
331	217	11011001	1010	Ø12	PWRF
332	218	11011010	1001	Ø11	STKFL
333	219	11011011	1011	Ø13	LCLK
334	220	11011100	1001	Ø11	STKFL
335	221	11011101	1010	Ø12	PWRF
336	222	11011110	1001	Ø11	STKFL
337	223	11011111	0111	Ø07	XMIT

M7261—8 REV A

340	224	11100000	1001	Ø11	STKFL
341	225	11100001	1010	Ø12	PWRF
342	226	11100010	1001	Ø11	STKFL
343	227	11100011	1011	Ø13	LCLK
344	228	11100100	1001	Ø11	STKFL
345	229	11100101	1010	Ø12	PWRF
346	230	11100110	1001	Ø11	STKFL
347	231	11100111	0101	Ø05	RCD
350	232	11101000	1001	Ø11	STKFL
351	233	11101001	1010	Ø12	PWRF
352	234	11101010	1001	Ø11	STKFL
353	235	11101011	1011	Ø13	LCLK
354	236	11101100	1001	Ø11	STKFL
355	237	11101101	1010	Ø12	PWRF
356	238	11101110	1001	Ø11	STKFL
357	239	11101111	0101	Ø05	RCD
360	240	11110000	1001	Ø11	STKFL
361	241	11110001	1010	Ø12	PWRF
362	242	11110010	1001	Ø11	STKFL
363	243	11110011	1011	Ø13	LCLK
364	244	11110100	1001	Ø11	STKFL
365	245	11110101	1010	Ø12	PWRF
366	246	11110110	1001	Ø11	STKFL
367	247	11110111	1110	Ø16	STOP
370	248	11111000	1001	Ø11	STKFL
371	249	11111001			

DIGITAL EQUIPMENT CORPORATION
MAYNARD, MASSACHUSETTS

PARTS LIST

MADE BY	R. ROBICHAUD	CHECKED	C. TESCHNER	SECTION	
DATE	12-8-71	DATE	5-1-72	1	
ENG	G. Graham	PROD	R. K. PETERSON	ISSUED SECT.	
DATE	4-5-72	DATE	5-10-72	1	

ITEM NO.	DWG NO. / PART NO.	DESCRIPTION	QUANTITY / VARIATION KY11-JA	KY11-JB	KY11-JC	KY11-JF
1	D-MD-7410799-0-0	CONSOLE BEZEL REWORK	1	1	1	1
~~2~~	~~E-IA-7409374-3-0~~	~~BEZEL CONSOLE (11/10)~~	~~X~~	~~1~~	~~X~~	~~X~~
3	E-IA-5409766-0-0	CONSOLE ETCH BOARD ASSY	1	1	1	1
~~4~~	~~E-IA-5409766-2-0~~	~~CONSOLE ETCH BOARD ASSY (OPOCA)~~	~~X~~	~~X~~	~~1~~	
5	A-PS-1210975-0-0	LOCK & CAM ASS'Y	1	1	1	1
6	9006020-1	SCR, PHL PAN HD. #6-32 X 1/4 LG	6	6	6	6
7	9006633	WASH INT TOOTH LOCK #6	6	6	6	6
8	9006000-1	SCR PHL PAN HD # 2-56 X 3/8 LG	2	2	2	2
9	9008029-1	SCR PHL PAN HD #2-56 X 5/8 LG	2	2	2	2
10	~~121079(-0-0~~	~~SWITCH DPST N.O.~~	~~1~~	~~1~~	~~1~~	
11	~~C-MD-7409534-0-0~~	~~ACTUATOR RE-WORK~~	~~1~~	~~1~~	~~1~~	
12	~~121090-1~~	~~INSULATOR~~	~~2~~	~~2~~	~~2~~	
13	B-IA-7409444-0-0	DETENT	1	1	1	1
14	9006686	WASH #2 SPLIT LOCK	5	5	5	6
15	9006000-4	SCR BINDER HD #2-56 X3/16 LG	2	2	2	2
16	~~121090-1~~	~~SWITCH TMD-5201 (COLD CONTAC 291-5201-00)~~	~~1~~	~~1~~	~~1~~	
17	C-UA-B08R-03	I/O CABLE (3'-0" LG)	1	1	1	1
18	4901077	LUBE (FOR CAM LOCK)	A/R	A/R	A/R	A/R
19	B-IA-7409730-0-0	JUMPER, POWER	2	2	2	2
20	~~B-MD-7409868-0-0~~	~~SWITCH ADAPTER PLATE~~	~~1~~	~~1~~	~~1~~	
21	~~B-MD-7409867-0-0~~	~~EXTENDER LEAF REWORK (ACTUATOR)~~	~~1~~	~~1~~	~~1~~	
22	~~9008449-2~~	~~SCR PHL FLAT HD #2-56 X 1/4 LG.~~	~~2~~	~~2~~	~~2~~	

TITLE	ASSY NO.	SIZE	CODE	NUMBER	REV.	ECO NO
CONSOLE ASSY (PDP11/05)	D-UA-KY11-J-0	A	PL	KY11-J-0	F	KY11J-00001
	SHEET 1 OF 2	DIST.	G			

DIGITAL EQUIPMENT CORPORATION
MAYNARD, MASSACHUSETTS

PARTS LIST

MADE BY	R. ROBICHAUD	CHECKED	C. TESCHNER	SECTION	
DATE	12-8-71	DATE	5-1-72	1	
ENG	G. GRAHAM	PROD	R. K. PETERSON	ISSUED SECT.	
DATE	4-5-72	DATE	5-10-72	1	

ITEM NO.	DWG NO. / PART NO.	DESCRIPTION	QUANTITY / VARIATION KY11-JA	KY11-JB	KY11-JC	KY11-JF
23	~~E-IA-7409374-4-0~~	~~BEZEL CONSOLE (VT40)~~	~~X~~	~~X~~	~~1~~	~~X~~
24	A-PS-1210982-0-0	KEY LOCK SWITCH	1	1	1	1
25	~~E-IA-7409374-5-0~~	~~BEZEL CONSOLE (UC15)~~	~~X~~	~~X~~	~~X~~	~~1~~
26	C-PS-3611275-0-0	LOGO (PDP-1105) NOTE VARIATIONS	1	1	X	X
27	D-IA-7409431-1-0	PANEL CONTROL (1105)	1	X	X	X
28	9009210-1	ADHESIVE TRANSFER TAPE ½ WIPE	A/R	A/R	A/R	A/R
29	1211052	CONSOLE PROTECTIVE COVER	1	1	1	1
30	D-IA-7409431-3-0	PANEL CONTROL (1110)	X	1	X	X
31	D-IA-7409768-0-0	PANEL CONTROL (GT40)	X	X	1	X
32	C-PS-3611275-4-0	LOGO (DEC GRAPHIC)	X	X	1	X
33	C-PS-3611275-5-0	LOGO (UC15)	X	X	X	1
34	D-IA-7409431-4-0	PANEL CONTROL (UC15)	X	X	X	1

TITLE	ASSY NO.	SIZE	CODE	NUMBER	REV.	ECO NO
CONSOLE ASSY (PDP11/05)	D-UA-KY11-J-0	A	PL	KY11-J-0	F	
	SHEET 2 OF 2	DIST.	G			

This drawing and specifications, herein, are the property of Digital Equipment Corporation and shall not be reproduced or copied or used in whole or in part as the basis for the manufacture or sale of items without written permission. 1972

LEGEND	
PART NO.	VARIATION
KY11-JA	11Ø5 CONSOLE WITH L.E.D.S.
KY11-JB	1V1Ø CONSOLE WITH L.E.D.S.
KY11-JC	VT4Ø CONSOLE WITH L.E.D.S.
KY11-JF	UC15 CONSOLE WITH L.E.D.S.

NOTES:

1. CASTING KEY HOLE SURFACES A & B TO BE COATED WITH LUBE (ITEM #18)
2. LOCK WASHER IS NOT USED ON SCREW UNDER SWITCH.
3. INSERT CONTROL PANEL (ITEM #27,30,31 OR 34) USING ADHESIVE TRANSFER TAPE (ITEM #28) ON REAR SURFACE & PRESS FIRMLY IN PLACE.

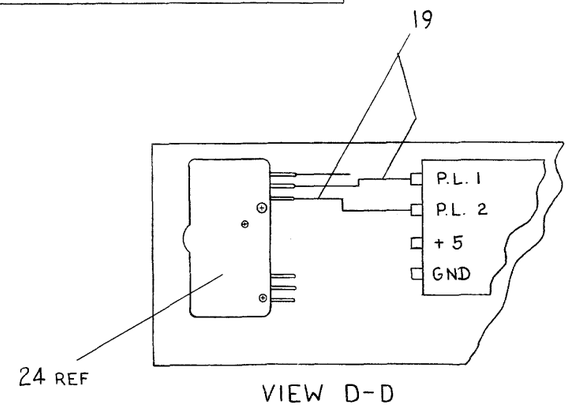

VIEW D-D
SCALE: NONE

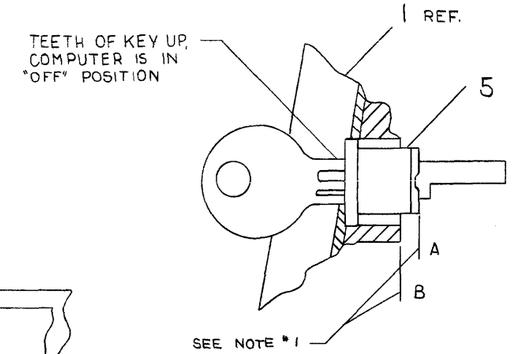

SECTION C-C
SCALE: 2/1

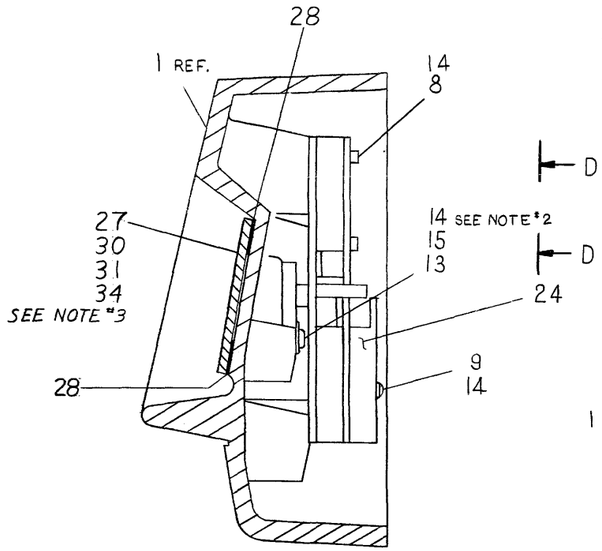

SECTION B-B
SCALE: 2/1

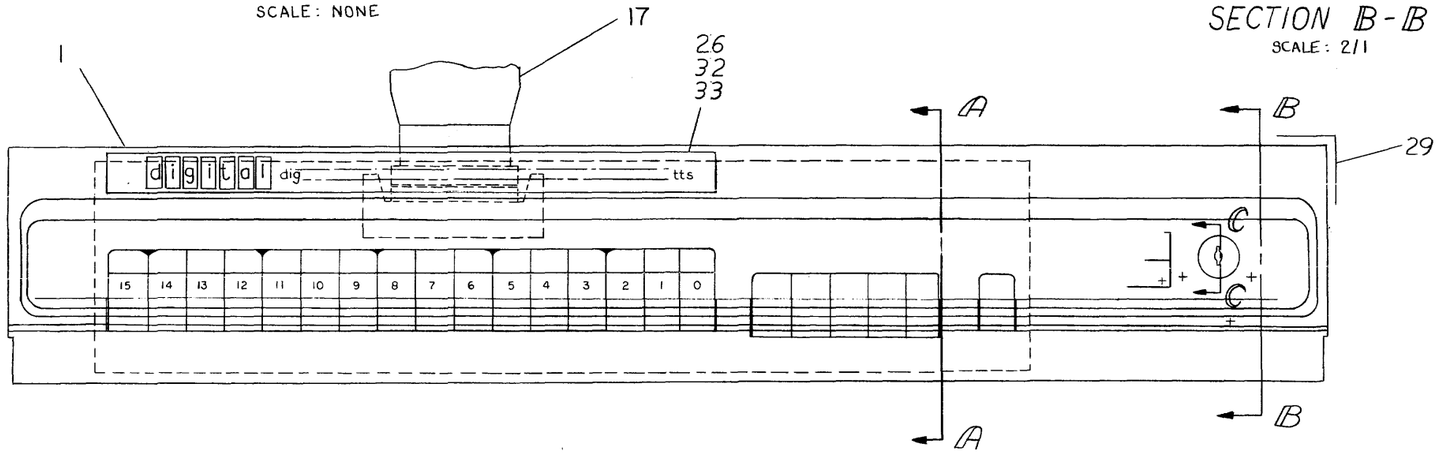

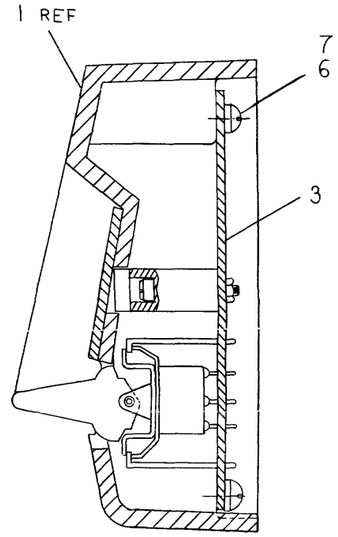

SECTION A-A
SCALE: 2/1

QTY.	DESCRIPTION	PART NO.	ITEM NO.
	PARTS LIST		

FIRST USED ON OPTION/MODEL: PDP 11Ø5

DO NOT SCALE DRAWING
UNLESS OTHERWISE SPECIFIED
DIMENSION IN INCHES
TOLERANCES
DECIMALS ± .005 FRACTIONS ± 1/64 ANGLES ± 0°30'
FINAL SURFACE QUALITY
REMOVE BURRS AND BREAK SHARP CORNERS

MATERIAL
FINISH

DRN.	CAHILL	DATE 11-16-71
CHK'D.	TESCHNER	DATE 4-14-72
ENG.	GRAHAM	DATE 4-5-72
PROJ. ENG.	WEEKS	DATE 5-5-72
PROD.	PETERSON	DATE 5-10-72

NEXT HIGHER ASSY: D-UA-11Ø5-Ø-Ø
SCALE: 1/1
SHEET 1 OF 1

digital EQUIPMENT CORPORATION
MAYNARD MASSACHUSETTS

TITLE: CONSOLE ASSY (PDP 11/Ø5)

SIZE	CODE	NUMBER	REV.
D	UA	KY11-J-Ø	F

DIST. G

REVISIONS

CHK	CHANGE NO.	REV.
	KY11-ØØØØ1	D
	REVISED & REDRAWN	
	G. GRAHAM 11-28-72	
	11/05-00040	E
	M. TITELBAUM	
	DWG NO WAS KY11-Ø-Ø	
	KY11J-00001	F
	G. GRAHAM 2-9-73	
	2-12-73	

DEC FORM NO DRD 100

This drawing and specification, both, are the property of Digital Equipment Corporation and shall not be reproduced or used in whole or in part as the basis for the manufacture or sale of items without written permission.

NOTES:
1. ATTACH SWITCH BRACKET (ITEM "18") TO ETCH BOARD (ITEM "1") BY THREADING WIRE WRAP ON SWITCH BRACKET USING TWISTING TOOL # 8-MD-7606203 (14 PLACES)
2. ASSEMBLE S2, 3, 4, 5 & 6 AS SHOWN.
3. ASSEMBLE S1 & S7 THRU S22 AS SHOWN.

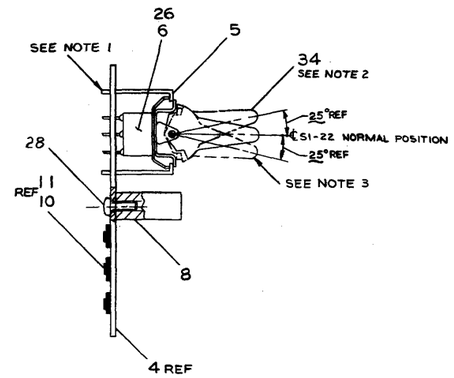

VIEW A-A

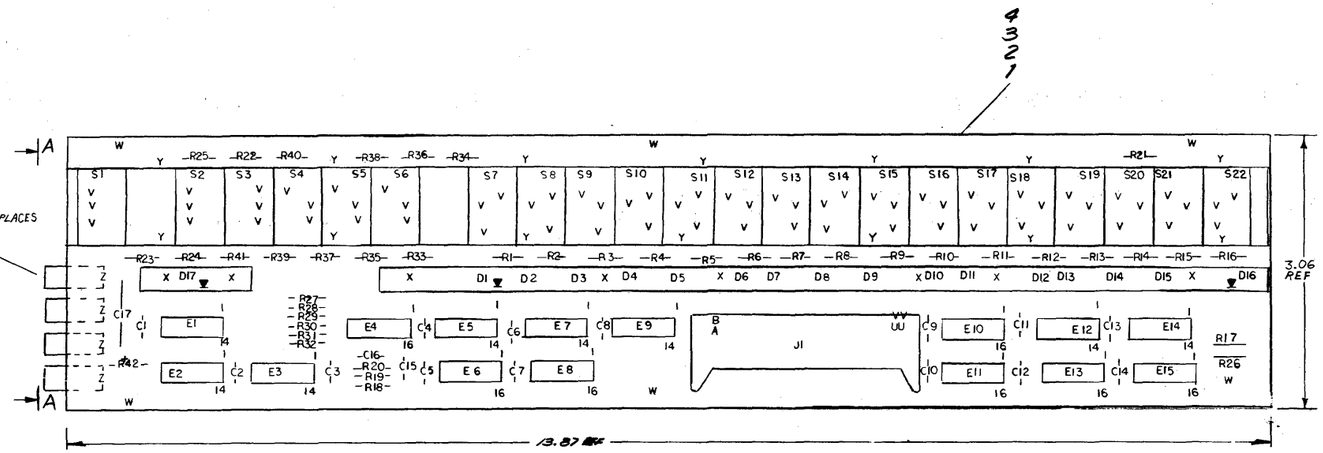

QTY	REF DESIGNATION	DESCRIPTION	PART NO.	ITEM NO.
		PARTS LIST		
		ETCH BOARD REV. D		
		MODB	D-PS-1210786-0-0	36
22				35
				34
				33
				32
				31
				30
				29
8		POLI-DRIVE TYPE F 4-40-5/16	9009236	28
5	S4,S5,S4,S5,S6	SWITCHES, MOMENTARY	1210841	27
1	E3	IC. DEC 7417	1909929	26
1	E4	IC. DEC 74123	1910936	25
2	E6, E8	IC. DEC 74193	1910018	24
6	E9, E12, E14, E7, E1, E2	IC. DEC 7416	1909788	23
1	E5	IC. DEC 7409	1909686	22
4	E10, E11, E13, E15	I.C. DEC 8271	1909615	21
2	R19-R20	RES. 27Ω ¼W 5%	1303366	20
17	R-R16 R29	RES. 180 ohm 5%	1301322	19
17	R9-R15, R21-R28	RES. 1K ¼W 5%	1300365	18
6	R17-R22	RES. 47 ¼W 5%	1300202	17
14	C1-C14	CAP. .01 MF 100V 20%	1001	16
1	C17	CAP 6.8 MF 35V 20%	1000067	15
2	C15, C16	CAP. 100 MF 10V 5%	1000016	14
17	D1-D17	DIODE, LIGHT EMITTING (RED)	1110	13
4		SOCKET "ESS-4 STAMPSON	9007887	12
4		FASTEN 7AB	9007112	11
3		SER. HOLDER (B.A.)	1210795-2	10
1		SHROUD C.S.D. HOLDER (B.A.)	1210848-2	9
1	J	CONNECTOR	1203941	8
17	S7-S22, S3	SWITCHES TOGGLE	1210840	7
1		SUPPORT SWITCHES	D-MD-7606203-0-0	6
1		ETCH CIRCUIT BOARD	D-IA-5409766-0-0	5
REF		MODULE ECO HISTORY	D-IA-5409766-0-6	4
REF		CIRCUIT SCHEMATIC	D-CS-5409766-0-1	3
REF		X-Y COORDINATE MAP LOCATION	XCO-5409766-0-0	2
				1

DEC NO.	EIA NO.	DEC NO.	EIA NO.

SEMICONDUCTOR CONVERSION CHART

DEC 74193	8	16	
DEC 74193	8	16	
DEC 8271	8	16	
IC TYPE	GND	+5V	

GND AND 5V ARE USUALLY PIN 7 AND 14 RESPECTIVELY EXCEPTIONS ARE STATED ABOVE

IC PIN LOCATIONS

ITEM NO.	AWG	FROM PT	TO PT

JUMPER LIST

REV	CHANGE NO.	ORIGINATED	DESCRIPTION
A		11-6-72	ORIGINAL RELEASE
B		12-5-72	ADDED JUMPER
C		12-15-72	ADDED JUMPER
D		2-28-73	ADDED JUMPER

		DATE
DRAWN		11-6-72
Engineer		12-5-72
Engineering Manager		2-10-73
Quality Assurance		2-28-73
Manufacturing		3-6-73

NEXT HIGHER ASSY D-UA-KYII-0-0

SCALE 2/1

SHEET 1 OF 1

EQUIPMENT CORPORATION

TITLE ETCH BOARD ASSY. (1105 CONSOLE)

SIZE CODE A | NUMBER EIA 5409766-0-0 | REV E

DWG

			36
			35
22		MODB	D-PS-1210786-0-0
			33
			32
			31
			30
			29
8		POLI-DRIVE TYPE F 4-40-5/16	9009236
5	S4,S5,S4,S5,S6	SWITCHES, MOMENTARY	1210841
1	E3	IC. DEC 7417	1909929
1	E4	IC. DEC 74123	1910936
2	E6, E8	IC. DEC 74193	1910018
6	E9, E12, E14, E7, E1, E2	IC. DEC 7416	1909788
1	E5	IC. DEC 7409	1909686
4	E10, E11, E13, E15	I.C. DEC 8271	1909615
2	R19-R20	RES. 27Ω ¼W 5%	1303366
17	R-R16 R29	RES. 180 ohm 5%	1301322
17	R9-R15, R21-R28	RES. 1K ¼W 5%	1300365
6	R17-R22	RES. 47 ¼W 5%	1300202
14	C1-C14	CAP. .01 MF 100V 20%	1001
1	C17	CAP 6.8 MF 35V 20%	1000067
2	C15, C16	CAP. 100 MF 10V 5%	1000016
17	D1-D17	DIODE, LIGHT EMITTING (RED)	1110
4		SOCKET "ESS-4 STAMPSON	9007887
4		FASTEN 7AB	9007112
3		SER. HOLDER (B.A.)	1210795-2
1		SHROUD C.S.D. HOLDER (B.A.)	1210848-2
1	J	CONNECTOR	1203941
17	S7-S22, S3	SWITCHES TOGGLE	1210840
1		SUPPORT SWITCHES	D-MD-7606203-0-0
1		ETCH CIRCUIT BOARD	D-IA-5409766-0-0
REF		MODULE ECO HISTORY	D-IA-5409766-0-6
REF		CIRCUIT SCHEMATIC	D-CS-5409766-0-1
REF		X-Y COORDINATE MAP LOCATION	XCO-5409766-0-0

D-IA-5409766-0-0 E

This drawing and specifications, herein, are the property of Digital Equipment Corporation and shall not be reproduced or copied, or used in whole or in part as the basis for the manufacture or sale of items without written permission.

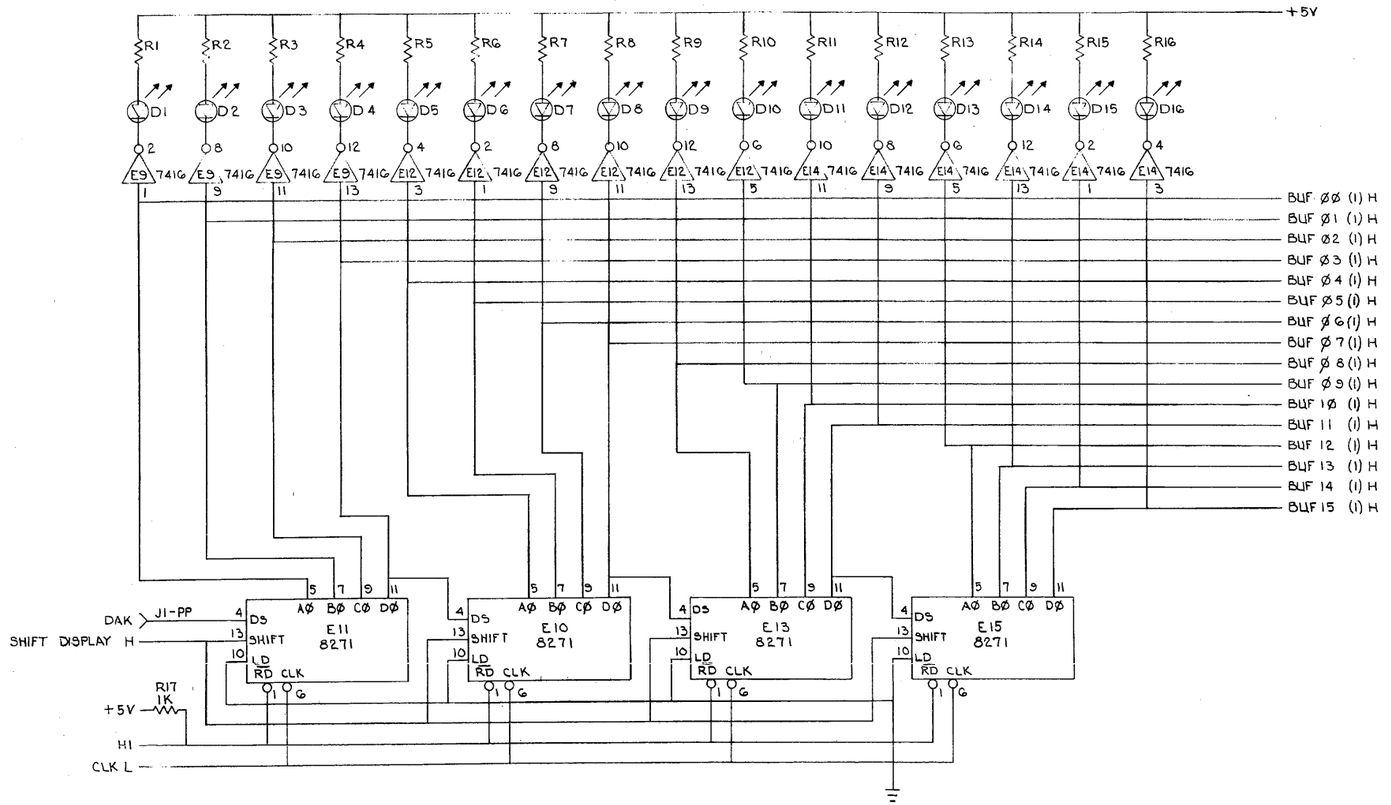

UNLESS OTHERWISE INDICATED:
RESISTORS= 1/4W, 5%
CAPACITORS= 100V, 5%
DIODES ARE LIGHT EMITTING
PIN 14=+5V, PIN7=GND ON DEC 7404, 7416, 7417
PIN 16=+5V, PIN8=GND ON DEC 8271, 74123, 74193

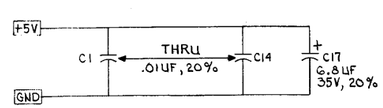

QTY	REF DESIGNATION	DESCRIPTION	PART NO.	ITEM NO.

PARTS LIST

ETCH BOARD REV D

REV	CHANGE NO.	CHK	REVISIONS
B	5409766-00001	MM	5409766-00001
D	5409766-00003		DK Krishna
C	5409766-00002+2A		DK Krishna
			R. KRISHNA
			R. KRISHNA
			R. KRISHNA
			R. KRISHNA
			G. GRAHAM
			G. Graham 11-6-72

DEC NO.	EIA NO.	DEC NO.	EIA NO.

SEMICONDUCTOR CONVERSION CHART

DRN. Roger J. Doucette DATE 18 JAN 72
CHK'D. Ordway DATE 26 JAN 72
ENG. R Krishna DATE 2-10-72
PROJ. ENG. R Krishna DATE 2-10-72
PROD. R K Peterson DATE 2-10-72
NEXT HIGHER ASSY E-IA5409766-0-0
SCALE
SHEET 1 OF 3

digital EQUIPMENT CORPORATION MAYNARD, MASSACHUSETTS

TITLE 11/05 CONSOLE

SIZE D CODE CS NUMBER 5409766-0-1 REV. E

DIST.

DEC FORM NO. DRD-135

This drawing and specifications, herein, are the property of Digital Equipment Corporation and shall not be reproduced or copied or used in whole or in part as the basis for the manufacture or sale of items without written permission.

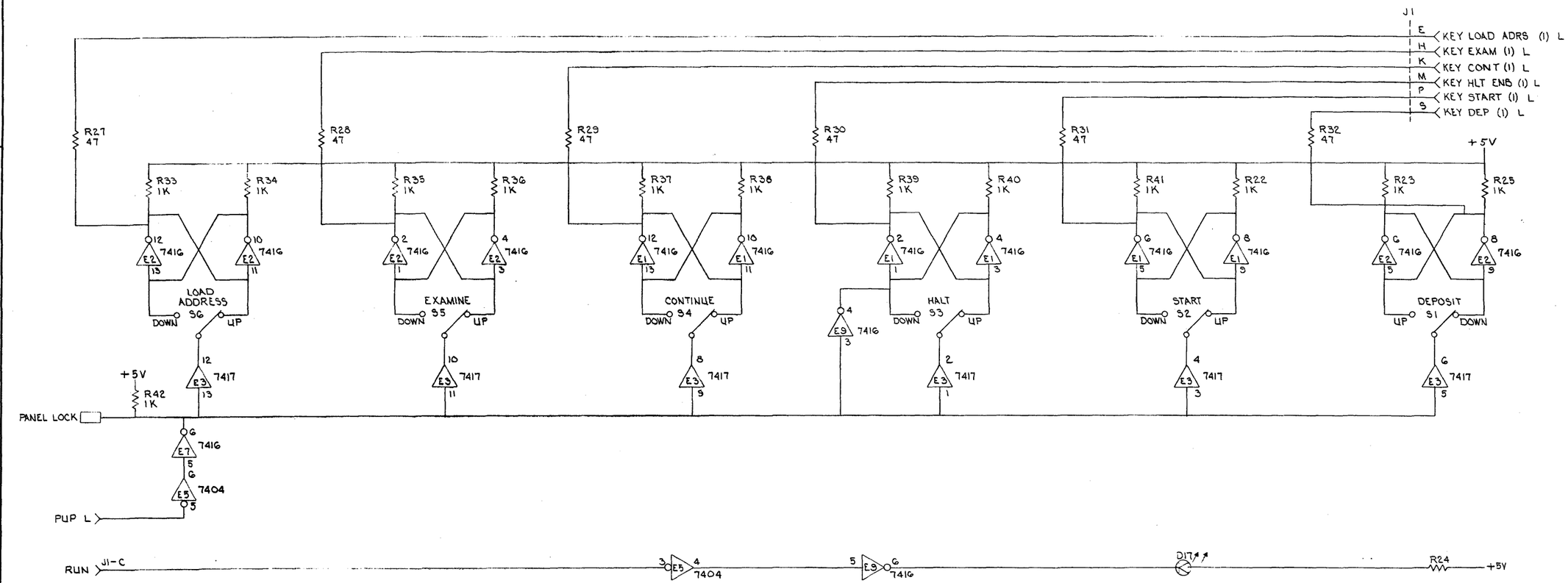

QTY	REF DESIGNATION	DESCRIPTION	PART NO.	ITEM NO.

PARTS LIST

ETCH BOARD REV D

REV	CHANGE NO.	REVISIONS	DEC NO.	EIA NO.	DEC NO.	EIA NO.

SEMICONDUCTOR CONVERSION CHART

DRN. Roger J Dumoulin DATE 19 Jan 72
CHK'D. [signature] DATE 20 Jan 72
ENG. [signature] DATE 72
PROJ. ENG. [signature] DATE 2-10-72
PROD. [signature] DATE 2-10-72
NEXT HIGHER ASSY E-IA-5409566-0-0
SCALE
SHEET 2 OF 3

digital EQUIPMENT CORPORATION MAYNARD, MASSACHUSETTS

TITLE 11/05 CONSOLE

SIZE D CODE CS NUMBER 5409766-0-1 REV. E

DIST.

DEC FORM NO DRD-135

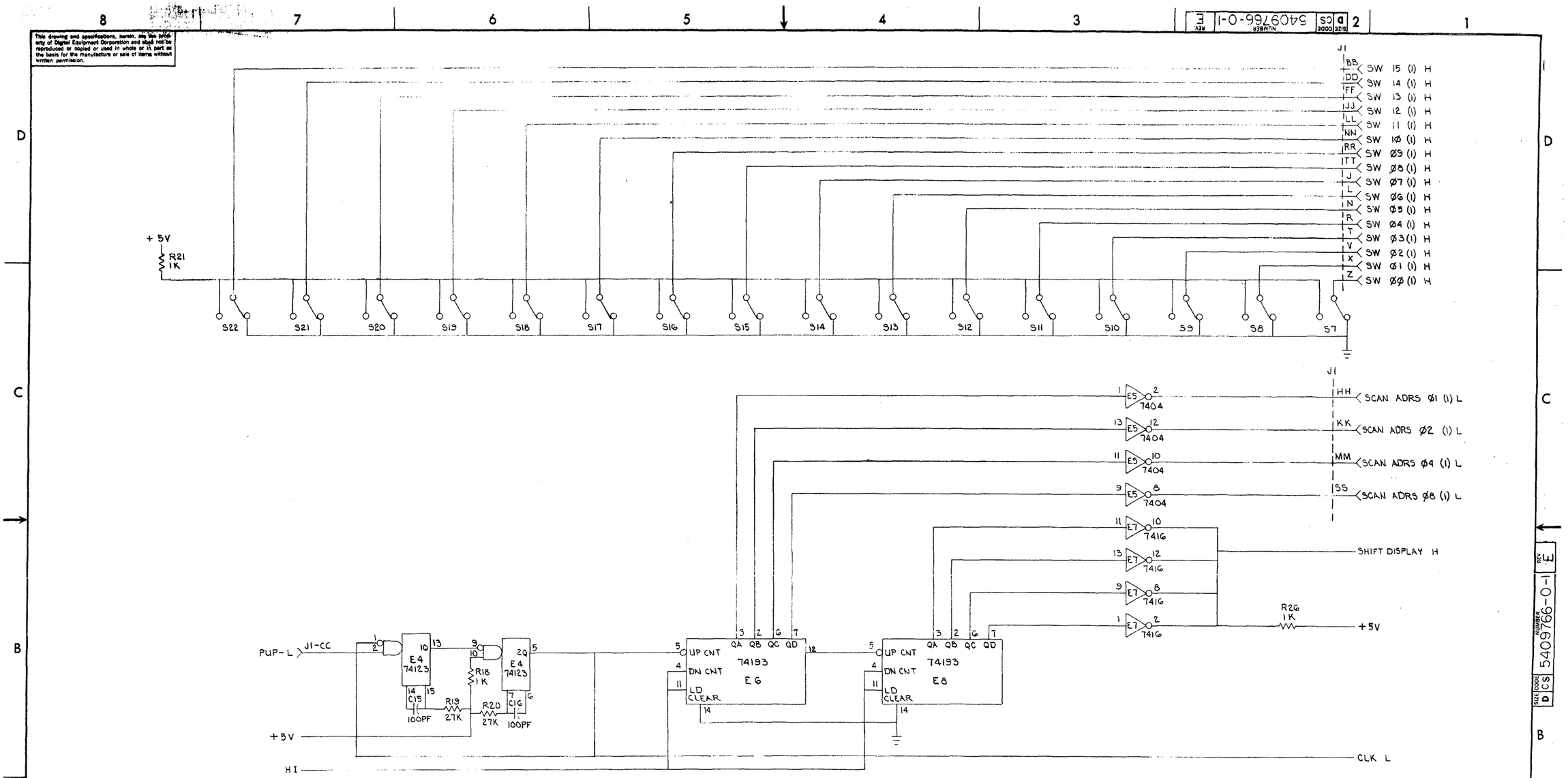

QTY	REF DESIGNATION	DESCRIPTION	PART NO.	ITEM NO.

PARTS LIST

ETCH BOARD REV D

DEC NO.	EIA NO.	DEC NO.	EIA NO.

SEMICONDUCTOR CONVERSION CHART

CHK | CHANGE NO. | REVISIONS | REV

DRN. Roger J. Doucette DATE 20 Jan 72
CHK'D. [illegible] DATE 26 Jan 72
ENG. [illegible] DATE 2-10-72
PROJ. ENG. [illegible] DATE 2-10-72
PROD. [illegible] DATE 2-10-72

NEXT HIGHER ASSY E-IA-5409766-0-0

SCALE

SHEET 3 OF 3

digital EQUIPMENT CORPORATION MAYNARD, MASSACHUSETTS

TITLE 11/05 CONSOLE

SIZE D CODE CS NUMBER 5409766-0-1 REV. E

DIST.

DEC FORM NO DRD-135

digital EQUIPMENT CORPORATION
MAYNARD, MASSACHUSETTS

DRAWING DIRECTORY

CUSTOMER PRINT SET INDEX

THIS IS PRINT SET

SEQUENCE	
MODULE UTILIZATION	D_MU_MM11_L_1
BLOCK DIAGRAM	D_BD_MM11_L 2
TIMING DIAGRAM	D_TD_MM11_L_3
* MEMORY DRIVERS	E_SC_G231_0_1
* CONTROL & DATA LOOPS	E_CS_G110_0_1
STACK SCHEMATIC	E_CS_H213_0_1
STACK SCHEMATIC	E_CS_H214_0_1
BLOCK DIAGRAM	D-BD-MMII-S-2
4K MEMORY	A-PL-MMII-K-0
8K MEMORY	A-PL-MMII-L-0

SEQUENCE

MFG. PRINT SET
MFG. TEST PRO. FOR MMII/K,L,M,S&SP
A-SP-MMII-L-5

UNIT VARIATIONS

VARIATION	TITLE	PRINT SET TYPE MM11_L
MM11_K	4K 16 BIT 18 MIL MEMORY	X
MM11_L	8K 16 BIT 18 MIL MEMORY	X

* SPECIAL REVISION PRINTS ARE AVAILABLE ON "C" ETCH REV. MODULES.
CARE SHOULD BE TAKEN TO INSURE THAT PROPER PRINTS ARE ORDERED.

REVISIONS		
DATE	CHG. NO.	REV
9/72	MMIIL-00001	A
11-72	MMIIL-00002	B
1-73	MISC-00107	C

USED ON OPTION/MODEL	
MM11_K	
MM11_L	

		DATE
DRN.	J. Kalaghan	1-25-72
CHK'D.	J. Kalaghan	1-25-72
PROJ ENG.	P. Durant	1-25-72
PROD.	R.K. Peterson	1-26-72
FIELD SERV.	W.A. Grundy	1-26-72

SHEET 1 OF 3

TITLE

SIZE	CODE	NUMBER	REV
B	DD	MM11_L	C

DIST

DRB 106

DEC 16-(325) 1002 1-N871

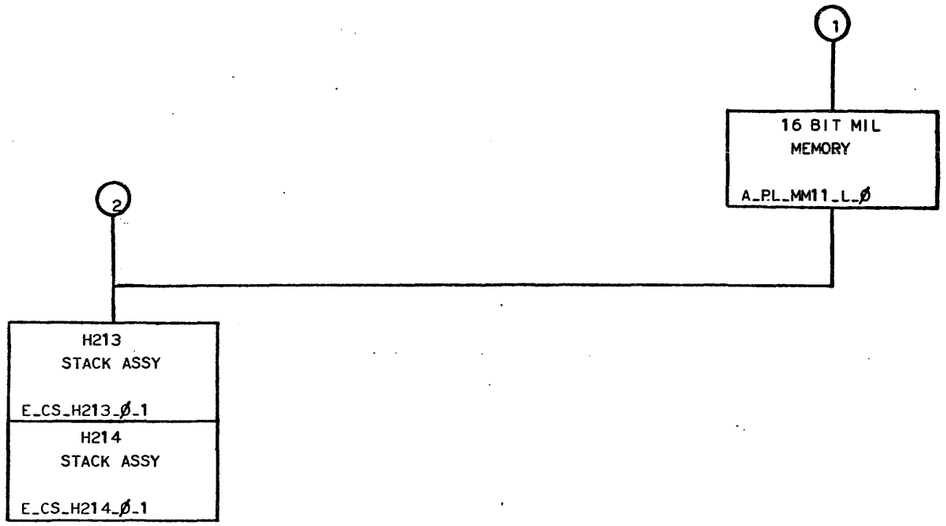

TITLE		SIZE	CODE	NUMBER	REV
16 BIT 18 MIL MEMORY	SHEET 2 OF 3	B	DD	MM11_L	C

ELECTRICAL

CUSTOMER PRINT SET MM11_L	MFG SET	FIND NO.	DRAWING NO.	REV	NO OF SHT	DESCRIPTION	OPTION NO.
X		1	D_MU_MM11_L_1	*	1	MODULE UTILIZATION	
X			D_BD_MM11_L_2	*	1	BLOCK DIAGRAM	
X			D_TD_MM11_L_3	*	1	TIMING DiAGRAM	
X			E_CS_G231_Ø_1	E4	5	MEMORY DRIVER	
X			E_CS_G11Ø_Ø_1	E5	5	CONTROL & DATA LOOPS	
X			D-BD-MMII-S-2	#	2	BLOCK DIAGRAM	
X			A-PL-MMII-K-O		1	4K MEMORY	
X			A-PL-MMII-L-O		1	8K MEMORY	
X		2	E_CS_H213_Ø_1	#	2	STACK SCHEMATIC	
X			E_CS_H214_Ø_1	#	2	STACK SCHEMATIC	
			A-SP-G109-0-8		1	G109,G110 CONT & DATA LOOP MFG. SPEC.	
			A-SP-G231-0-8		1	MEMORY DRiVER MFG. SPEC.	
			A-SP-MMII-L-4		1	MMII-K,-L,-S &-SP MFG. TEST SPEC.	
	X		A-SP-MMII-L-5		29	MFG. TEST PRO. MMII/K,L,M,S & SP	

MECHANICAL

CUSTOMER PRINT SET MM11_L	MFG SET	FIND NO.	DRAWING NO.	REV	NO OF SHT	DESCRIPTION	OPTION NO.
		1	A_PL_MM11_L_Ø	*	1	MEMORY	
			A_PS_3010654_0_0			PURCHASE SPEC	
		2	B_DD_H214_Ø_1	#	2	STACK SCHEMATIC	
			B_DD_H213_Ø	#	2	STACK SCHEMATIC	
			A-PL_G645_Ø-Ø		1	STACK BOARD	

TITLE		SIZE	CODE	NUMBER	REV
16 BIT 18 MIL MEMORY	SHEET 3 OF 3	B	DD	MM11_L	C

This drawing and specifications, herein, are the property of Digital Equipment Corporation and shall not be reproduced or copied or used in whole or in part as the basis for the manufacture or sale of items without written permission.

PIN SIDE VIEW OF BACKPLANE

THESE 2 SLOTS ARE UNIBUS WIRED ON ALL 3 CONNECTORS

F

	V	U	T	S	R	P	N	M	L	K	J	H	F	E	D	C	B	A
SIDE 1																		
	XPRD7	XPRD6	XNWD7	XNWD6	XNWD5	XNWD4	XNWD3	XNWD2	XNWD1	XNWD0	XS15	XS14	XS13	XS12	XS11	XS10	XS09	XS08
SIDE 2																		
	V	U	T	S	R	P	N	M	L	K	J	H	F	E	D	C	B	A
	XPRD7	XPRD6	XNWD7	XNWD6	XNWD5	XNWD4	XNWD3	XNWD2	XNWD1	XNWD0	XS15	XS14	XS13	XS12	XS11	XS10	XS09	XS08

	V	U	T	S	R	P	N	M	L	K	J	H	F	E	D	C	B	A
SIDE 1																		
	XPRD7	XPRD6	XPRD5	XPRD4	XPRD3	XPRD2	XPRD1	XPRD0	XS15	XS13	XS11	XS09	XS07	XS05	XS04	GND	-15V	5V
SIDE 2																		
	V	U	T	S	R	P	N	M	L	K	J	H	F	E	D	C	B	A
	XPRD7	XPRD6	XPRD5	XPRD4	XPRD3	XPRD2	XPRD1	XPRD0	XS15	XS13	XS11	XS09	XS07	XS05	XS04	GND	-15V	5V

	V	U	T	S	R	P	N	M	L	K	J	H	F	E	D	C	B	A
SIDE 1																		
	GND	GND																
SIDE 2																		
	V	U	T	S	R	P	N	M	L	K	J	H	F	E	D	C	B	A
	GND	GND																

E

	V	U	T	S	R	P	N	M	L	K	J	H	F	E	D	C	B	A
	BSA																	
	BSB	B1N			4SB	4IN	1SB	1SA	5SB	5IN	2SB	2SA	6SB	6SA	3IN	3SA	7SB	7SA
	BSB	B1N			4SB	4IN	1SB	1SA	5SB	5IN	2SB	2SA	6SB	6SA	3IN	3SA	7SB	7SA

	V	U	T	S	R	P	N	M	L	K	J	H	F	E	D	C	B	A
	BSA																	
	BSB	B1N	GND															
	BSB	B1N	GND														

This drawing and specifications, herein, are the property of Digital Equipment Corporation and shall not be reproduced or copied or used in whole or in part as the basis for the manufacture or sale of items without written permission.

NOTES:
* 1. ALL ARROWS SHOW SIGNAL FLOW DIRECTION.
* * 2. MATRIX SHOWN IS FOR ILLUSTRATION ONLY.
* * * 3. ACTUAL MATRIX HAS { Y AXIS 8 PRD, 8 NRD, 8 SS; X AXIS 4K 8 PRD, 8 NRD, 8 SS; X AXIS 8K 8 PRD, 8 NRD, 16 SS

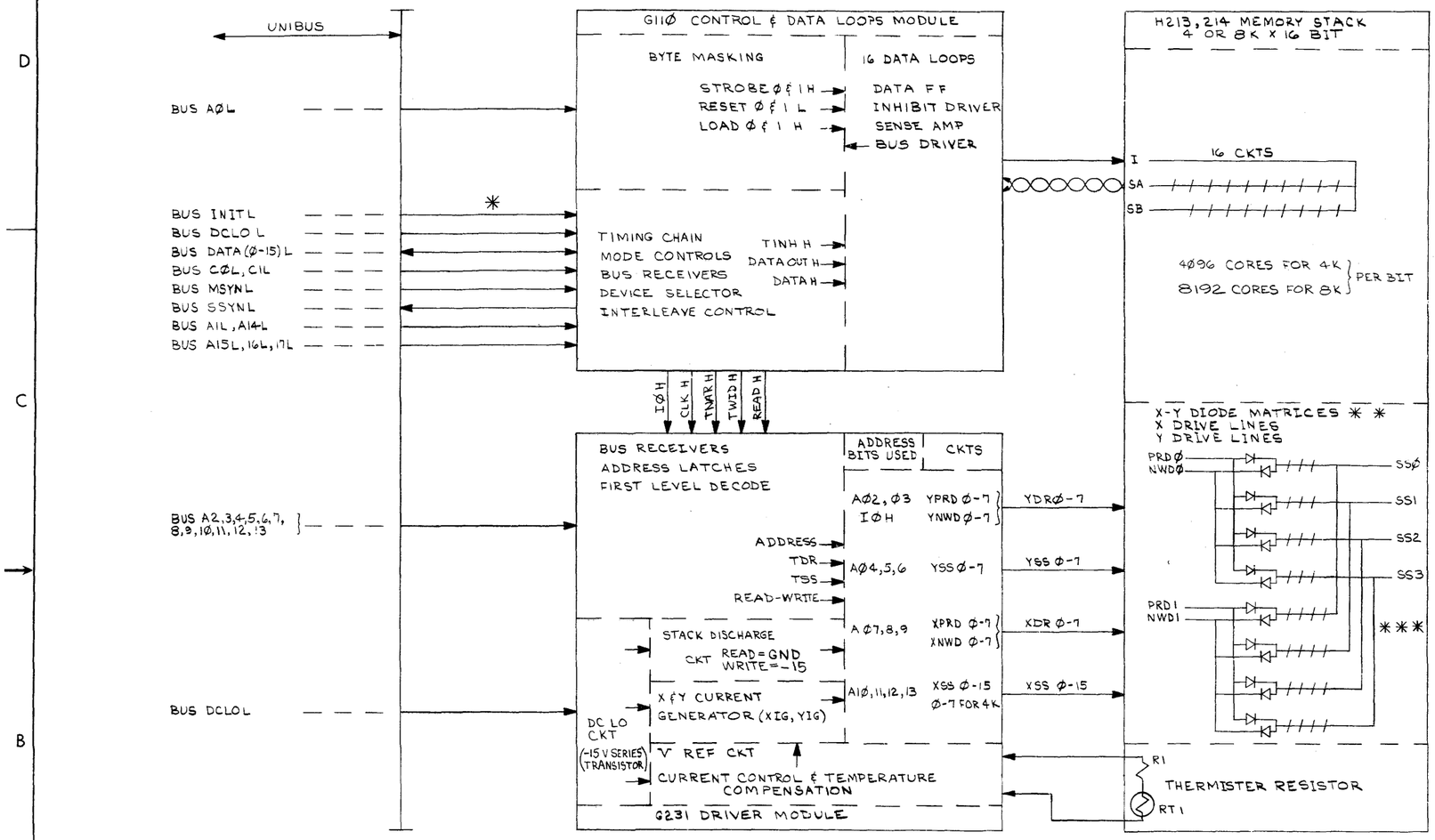

FIRST USED ON OPTION/MODEL	QTY.	DESCRIPTION	PART NO.	ITEM NO.
MM11-L		PARTS LIST		

UNLESS OTHERWISE SPECIFIED DIMENSION IN INCHES
TOLERANCES
DECIMALS: XXX = .005, XX = .02, X = .1
ANGLES: ±0° 30'
REMOVE BURRS AND BREAK SHARP CORNERS SURFACE QUALITY ✓
MATERIAL
FINISH

DRN. L. Gabany 11/10/71
CHK'D
ENG. P.D. Summit -25-71
PROJ. ENG. P.D. Summit -25-71
PROD. K.K. Peterson 11-26-71
NEXT HIGHER ASSY. B-DD-MM11-L

digital EQUIPMENT CORPORATION

TITLE: BLOCK DIAGRAM
MM11-L

SIZE D | CODE DBD | NUMBER MM11-L-2 | REV.
SCALE
SHEET OF | DIST.

REVISIONS: REV | CHANGE NO | CHK

REV | NUMBER MM11-L-2 | SIZE D | CODE DBD

This drawing and specifications, herein are the property of Digital Equipment Corporation and shall not be reproduced or copied or used in whole or in part as the basis for the manufacture or sale of items without written permission.

NOTES:
1. ANY SIGNALS NOT SHOWN ON DATIP, DATO OR DATO B ARE AS SHOWN ON DATI TIMING.
* 2. RESET L AND STROBE ∅,1 H DO NOT OCCUR IN DATO MODE. THEY ONLY OCCUR FOR THE BYTE NOT BEING ADDRESSED IN DATO B MODE.
** 3. LOAD H OCCURS FOR BOTH BITS IN DATO MODE AND ONLY FOR THE ADDRESSED BYTE IN THE DATO B MODE.
*** 4. ACTUAL TIME DEPENDS ON BUS AND PROCESSOR DELAYS.
5. ALL SIGNALS ON G109 OR G110 MODULE

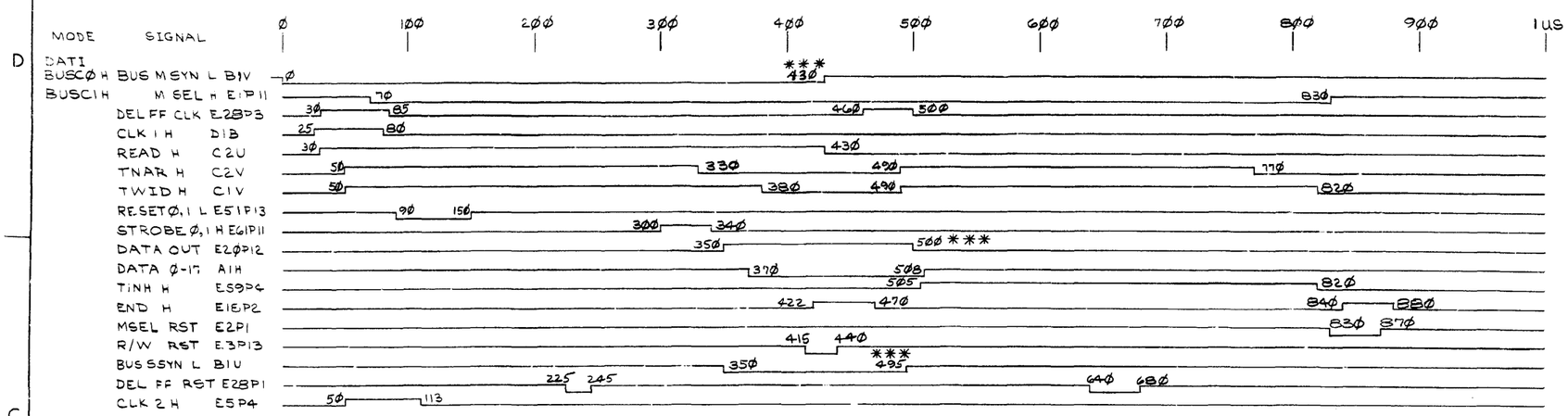

FIRST USED ON OPTION MODEL	QTY	DESCRIPTION	PART NO.	ITEM NO.
MM11-L		PARTS LIST		

UNLESS OTHERWISE SPECIFIED DIMENSION IN INCHES TOLERANCES
DECIMALS .XXX ± .005, .XX ± .02, .X ± .1 — ANGLES ± 30'
REMOVE BURRS AND BREAK SHARP CORNERS 5 MAX RADIUS
MATERIAL
FINISH
NEXT HIGHER ASSY B 00 MM11 L
SCALE
SHEET OF

DSN
CHK
ENG
PROJ ENG
PROD.
DATE

digital EQUIPMENT CORPORATION MAYNARD MASSACHUSETTS

TITLE: TIMING DIAGRAM (MM11-L, MM11-K)

SIZE D | CODE TD | NUMBER MM11-L-3 | REV

DIST

REVISIONS: REV | CHANGE NO | CHK

DRAWING 40322 (5MAR)

NOTES:
1. UNLESS OTHERWISE SPECIFIED ALL RESISTORS ARE 150Ω 1/4W 5% AND ALL CAPACITORS ARE 680 PF 100V 5%.
2. J5 & J6 SHOULD BE 1.5 INCH OF INSULATED LOOP
3. THIS PRINT IS FOR C REV ETCH MODULES ONLY

TYP POLARITY FOR ALL DIODES ON BOARD EXCEPT WHERE SHOWN OTHERWISE

2	W1, 2	3/8" STANDOFF	9008213	59
2		NYLON SCREWS	9008212	58
AR		WAKEFIELD COMPOUND	9008268	57
1	C53	CAP. 470 PF 100V 5%	1000024	56
3	W3-5	STANDOFF 1/4" O.D. 7/16 LG 4-40 TH	9009306	55
3		SCREW NYLON 3/8" LG 4-40 TH	9006401-04	54
80	R21-26, R37-52, 61-76 R123-138, R158-173	RES 100Ω 1/4W 5%	1300229	53
				52
1	C56	CAP. 680 PF 100V 5%	1000026	51
4		INSULATING FILM 245 x 600 x .002 THK	9008493	50
12		EYELET 4656-2 E.B. STIMPSON	9006732	49
1		HANDLE	1210111	48
82		SPLIT LUGS	9006735	47
4		HEAT SINK	1202313	46
7	E11-E14, E18, E18, E28	IC 74H74	1909667	45
1	E8	IC 74H04	1909931	44
10	E3, E8, E23, E28, E31, E34 L37, L48, L43, L46	IC 8251	1909584	43
3	E2, E4, E27	IC 74H08	1909658	42
2	E22, E25	IC 74H10	1909657	41
20	T1-T20	TRANSFORMER	1609996	40
4	E9, E15, E16, E17	IC DEC 380	1909685	39
20	E1, E5, E7, E10, E21, E24, E26, E29, E30, E32, E33, E35, E36, E38, E39, E41, E42, E44, E45, E47	IC 4008 QUAD TRANSISTOR	1510015	38
4	Q9, Q10, Q12, Q15	TRANSISTOR 2N3762	1509848	37
3	Q8, Q11, Q11	TRANSISTOR 2N4258	1505321	36
1	Q7	TRANSISTOR 8534 D	1507408	35
1	Q5	TRANSISTOR 3898 B	1503100	34
3	Q2, Q3, Q7	TRANSISTOR 1868	1502155	33
1	Q4	TRANSISTOR 2219	1501881	32
4	R85, R86, R183, R184	RES 18.8 1/8 1%	1310032	31
1	R92	RES 178K 1/8 1%	1302642	30
1	R91	RES 909 1/8 1%	1302685	29
2	R90, R94	RES 147 1/8 1%	1302574	28
2	R89, R185	RES 2K 1/8 5%	1302287	27
4	R9, R18, R186, R141	RES 68Ω 1/8 5%	1301424	26
1	R83	RES 750 1/8 5%	1301681	25
4	R27, R36, R138, R148	RES 5.1Ω 1/8 5%	1309422	24
1	R97	RES 15K 1/8 5%	1300496	23
1	R174	RES 10Ω 1/8 5%	1300478	22
1	R95	RES 2.2K 1/8 5%	1300417	21
4	R87, R88, R181, R182	RES 1.5K 1/8 5%	1300594	20
2	R10, R96	RES 47Ω 1/8 10%	1300313	19
3	R84, R99, R186	RES 1.5K 1/8 5%	1300291	18
1	R93	RES 47Ω 1/8 5%	1300315	17
A/R		WIRE, COPPER AWG #18 STRANDED (BLACK)	9107360-0	16
2	R98, R99	RES 330 1/8 5%	1300295	15
41	R1-R8, R28-R35 R53-R60, R96 R107-R114 R142-R149	RES 150 1/8 5%	1300250	14
2	R11, R81	RES 10Ω 1/8 5%	1300229	13
1	D50	DIODE 1N823 ZENER	1105508	12
25	D17, D18, D55, D60, D61 D64-D67, D101-D116	DIODE D872	1105275	11
89	D1-D16, D19-D54, D56, D57 D59, D62, D63, D68-D100	DIODE D864	1100114	10
8	C1-C5, C49	CAP 6.8 MFD 35V 20%	1000067	9
36	C6-C29, C46, C47, C48, C50, C53 C54, C74, C107, C108, C125, C126 C56	CAP 22nF 50V -20% 80%	1810274	8
80	C30-C45, C57, C58, C60-C73 C75-C106, C109-C124	CAP 1000 PF 100V 5% DM	1000042	7
A/R		WIRE JUMPER AWG #22 SOLID	9107560-01	6
2	C51, C55	CAP 39PF 100V 5% DM	1000018	5
1		ETCHED CIRCUIT BOARD	5005788	4
REF		MODULE ECO HISTORY	B-DD-G231-HS	3
REF		ASSY/DRILLING HOLE LAYOUT	C-DD-G231-HS	2
REF		X-Y COORDINATE HOLE LOCATION	B-CD-G231-B4	1
QTY	REF DESIGNATION	DESCRIPTION	PART NO.	ITM

IC TYPE	GND	+5V
GND AND 5V ARE NORMALLY PIN 7 AND 14 RESPECTIVELY. EXCEPTIONS ARE STATED ABOVE		
IC PIN LOCATIONS		

JUMPER LIST			
WIRE NO.	WIRE	FROM PT	TO PT
16		J6-A	J6-B
16		J3-A	J3-B
16		J6-A	J6-B
16		J3-A	J3-B
16		J4-A	J4-B
16		J1-A	J1-B
16		J2-A	J2-B

VIEW A-A

2N4258	GAME	NMH-L	ETCH BOARD REV		EQUIPMENT CORPORATION
G534D	NOME				
3689-B	2N 3644				PDP-11 MEMORY DRIVER (MDI)
E5.19	2N2219				
IN 825	NOME				
DG72	IN 3655	1008	NOME		
DG64	IN 3686	2N3762	GAME		
DEC NO.	EIA NO.	DEC NO.	EIA NO.		

REFERENCE FOR CONVERSION CHART

B-DD-MMH-L

ECS G231-B-1 E4

E4 ECS G231-B-1

This drawing and specifications, herein, are the property of Digital Equipment Corporation and shall not be reproduced or copied or used in whole or in part as the basis for the manufacture or sale of items without written permission.

BUS A10 L BN2 — E16 380 — BUS A11 L BN1 — E16 380 — BUS A09 L BM1 — E15 380 — BUS A08 L BM2 — E15 380 — BUS A07 L BL1 — E15 380 — BUS A03 L BT1 — E17 380 — BUS A02 L BT2 — E17 380

CDL2 A01H — DA1

E9 380 — E9 380

10K R174 +5V — BUS A13 L BP1 — J3 J4

	J3	J4
4K	IN	OUT
BK	OUT	IN

MD2 A10H — E18 74H74 — MD2 A11H — E18 74H74 — MD2 A09H — E19 74H74 — MD2 A09L — MD2 A08H — E20 74H74 — MD2 A07H — E13 74H74 — MD2 A03H — E13 74H74 — MD2 A03L — MD2 A02H — E4 74H74 — MD2 A01H — E11 74H74

DB1 — CDL2 CLK 1 H

BUS A06 L BL2 — E15 380 — BUS A12 L BP2 — E17 380 — BUS A05 L BK1 — E16 380 — BUS A04 L BK2 — E16 380

E3 380 SPARE — E3 380 SPARE — E2 74H00 SPARE

MD2 A05H — E12 74H74 — MD2 A04H — E12 74H74 — 74H74 SPARE E11

WRITE H — COL2 READ H — CV2 — E6 74H04 — TWIDH — E4 74H00 — TSSH — COL2 TNAR H — TNAR H

T.P.3

E22 74H10 — MD2 Y S1L — MD2 Y S0L — MD2 X S3L — MD2 X S2L — MD2 X S1L — MD2 X S0L

+5V — 100Ω R77 — 330Ω R78 — 470Ω R79 — D51 — Q1 GS34 — 330Ω R80 — D52 D53 D54 D55 D56 D57 — Q2 100B STACK DISCHARGE — 100Ω R81 — Q3 100B

E6 74H04 — TWID H — BUS DCLOL BF2L — R96 150Ω — Q5 3003B — R97 1.5K — R98 470Ω — Q6 4258 — R99 1.5K — Q7 100B

156Ω 300Ω — EC1 EA1 — VREF — C59 .22UF

62V D58 — C48 .22UF — R90 147Ω — R94 147Ω — C49 6.8 UF — C47 .22UF — R91 909Ω — R92 1.78K — J1 J2 — Q4 2219 — R95 2.2K — R93 470Ω — C50 .22UF — -15V — X-Y REFFERENCE SUPPLY

+5V — 750Ω R83 — 1.5K R84 — Q8 4258 — C51 39 PF — 470 PF C52 — R85 16.9Ω — R86 16.9Ω — Q9 3762 — Q10 — CURRENT LOOP J5 — TO READ DRIVERS & WRITE SWITCHES — R87 1.5K — R88 1.5K — D60 — R89 2K — D61 — CUT ETCH FORECO#5 — -15V

.22 UF C54 — D62 — .22 UF C53 — D63 — C56 680PF — R100 1.5K — Q11 4258 — C55 39 PF — R101 1.5K — R102 1.5K — R103 16.9Ω — R104 16.9Ω — Q12 — Q13 3762 — CURRENT LOOP J6 — X AXIS TO READ DRIVERS & WRITE SWITCHES — D64 — R105 2K — D65 — -15V — CUT ETCH FORECO#5

T.P.1 — CDL2 READ H — CV2 — E6 74H04 — READ L

T.P.2 — CDL2 TWID H — CV1 — CDL2 READ H — CV2 — CDL2 TNAR H — CV2 — WRITE H — E2 74H00 — MD2 TDR H

*** ALL INPUTS ARE FROM UNIBUS (BUS xxx L) OR G109 OR G110

* THIS CIRCUIT IS ON STACK BOARD

REVISIONS	CHANGE NO	DWR

FIRST USED ON OPTION/MODEL	QTY	DESCRIPTION	PART NO	REV
		PARTS LIST		

UNLESS OTHERWISE SPECIFIED DIMENSION IN INCHES TOLERANCES
DECIMALS: XXX ± .005, XX ± .02, X ± .1 — ANGLES: ± 0° 30'
REMOVE BURRS AND BREAK SHARP CORNERS 0.010 R MAX
MATERIAL
FINISH

DRN — DATE 9-20-72
CHK — DATE
ENG — DATE
PROJ ENG — DATE
PROJ LDR — DATE 10-2-72
MFG ENGR ASST — DATE
SCALE — SHEET 2

DIGITAL EQUIPMENT CORPORATION — MAYNARD, MASSACHUSETTS

TITLE: POP-MEMORY DRIVER
DRAWING — MATERIAL
DCS 6231-0-1 — E4

SIZE D — CODE — NUMBER DCS6231-0-1 — REV E4

DEC FORM NO DRD 197-B

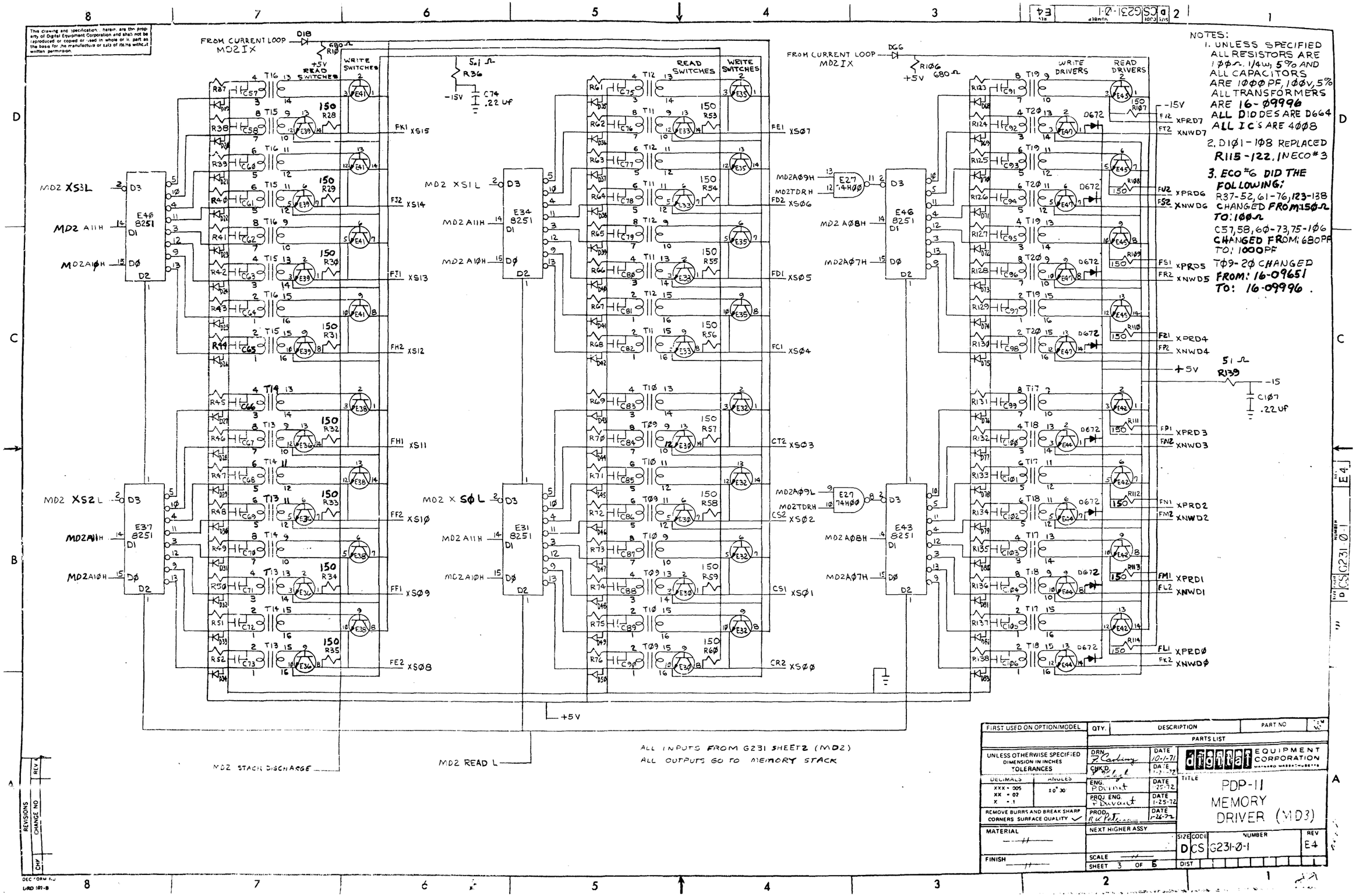

NOTES:

1. UNLESS SPECIFIED ALL RESISTORS ARE 1ØØΩ, 1/4W, 5% AND ALL CAPACITORS ARE 1ØØØPF, 1ØØV, 5% ALL TRANSFORMERS ARE 16-Ø9996 ALL DIODES ARE D664 ALL IC'S ARE 4ØØ8
2. D1Ø1-1Ø8 REPLACED R115-122. IN ECO#3
3. ECO#6 DID THE FOLLOWING: R37-52, 61-76, 123-138 CHANGED FROM: 15ØΩ TO: 1ØØΩ C57, 58, 6Ø-73, 75-1Ø6 CHANGED FROM: 680PF TO: 1000PF TØ9-2Ø CHANGED FROM: 16-09651 TO: 16-09996.

FIRST USED ON OPTION/MODEL	QTY.	DESCRIPTION	PART NO	REV
		PARTS LIST		

UNLESS OTHERWISE SPECIFIED DIMENSION IN INCHES TOLERANCES

DECIMALS: XXX = .005, XX = .02, X = .1 — ANGLES: ±0° 30'

REMOVE BURRS AND BREAK SHARP CORNERS SURFACE QUALITY ✓

MATERIAL —//—

FINISH —//—

DRN. F. Carbiny	DATE 10-1-71	digital EQUIPMENT CORPORATION MAYNARD MASSACHUSETTS
CHK'D. [illegible]	DATE 1-2-72	
ENG. P. Durant	DATE 1-25-72	TITLE PDP-11 MEMORY DRIVER (MD3)
PROJ. ENG. P. Durant	DATE 1-25-72	
PROD. R. K. Peterson	DATE 1-26-72	
NEXT HIGHER ASSY		SIZE D CODE CS NUMBER G231-Ø-1 REV E4
SCALE —//—		
SHEET 3 OF 5		DIST

REVISIONS — CHANGE NO — REV — CHK

DEC FORM NO LRD 107-B

This drawing and specifications, herein, are the property of Digital Equipment Corporation and shall not be reproduced or copied or used in whole or in part as the basis for the manufacture or sale of items without written permission.

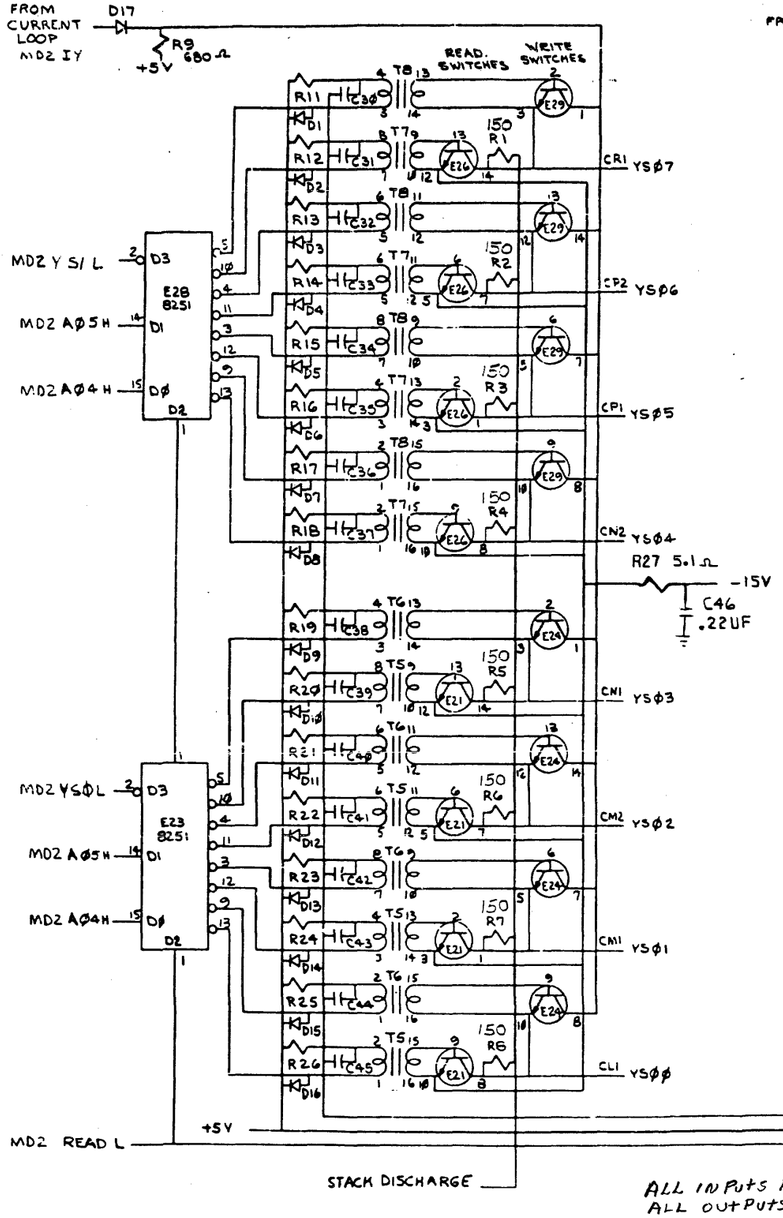

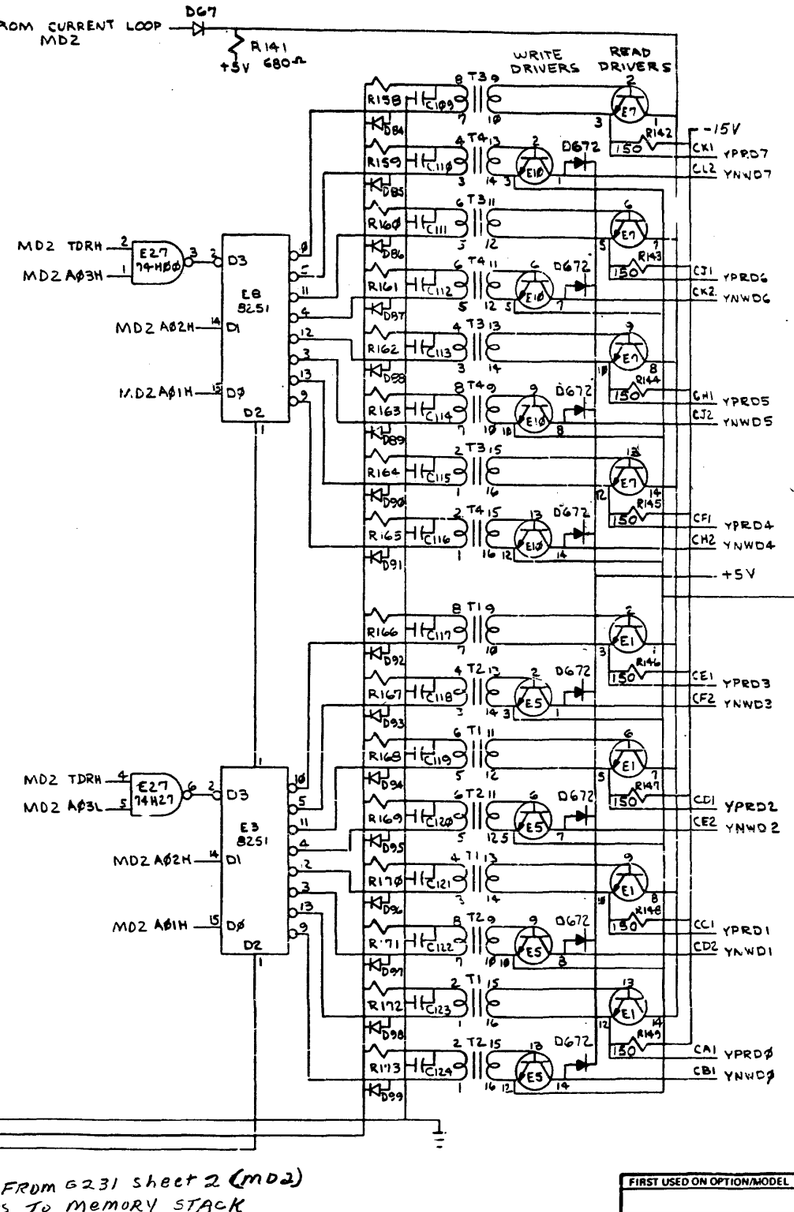

ALL INPUTS FROM G231 sheet 2 (MD2)
ALL OUTPUTS TO MEMORY STACK

NOTES:
1. UNLESS SPECIFIED
   ALL RESISTORS ARE 100Ω, 1/4W, 5%
   ALL CAPACITORS ARE 1000 PF, 100V, 5%
   ALL TRANSFORMERS ARE 16-09996
   ALL DIODES ARE D664
   ALL I.C.'S ARE 4008
2. D101-108 REPLACED R115-122 IN ECO #3.
3. ECO #6 DID THE FOLLOWING:
   R11-26, 158-173 CHANGED FROM: 150Ω TO: 100Ω
   C30-45, 109-124 CHANGED FROM: 680 PF TO: 1000 PF
   T1-8 CHANGED FROM: 16-09651 TO: 16-09996

REVISIONS	REV	CHANGE NO	CHK
	E4		

FIRST USED ON OPTION/MODEL	QTY.	DESCRIPTION	PART NO.	ITEM NO.
		PARTS LIST		

UNLESS OTHERWISE SPECIFIED DIMENSION IN INCHES. TOLERANCES
DECIMALS: .XXX ± .005, .XX ± .02, .X ± .1 — ANGLES: ±0° 30'
REMOVE BURRS AND BREAK SHARP CORNERS SURFACE QUALITY ✓
MATERIAL —
FINISH —

DRN	P Carberry	DATE 10/8/71
CHK'D	D Zeleski	DATE 1-21-72
ENG.	P Durant	DATE 1-25-72
PROJ. ENG.	P.D urant	DATE 1-25-72
PROD.	Ron Peterson	DATE 1-26-72
NEXT HIGHER ASSY.		
SCALE	—	
SHEET	4 OF 5	

DIGITAL EQUIPMENT CORPORATION MAYNARD MASSACHUSETTS

TITLE: PDP-11 MEMORY DRIVER (MD4)

SIZE	CODE	NUMBER	REV
D	CS	G231-Ø-1	E4

DIST.

DEC FORM NO 11RD 102-B

THIS DRAWING AND SPECIFICATIONS, HEREIN ARE THE PROPERTY OF DIGITAL EQUIPMENT CORPORATION AND SHALL NOT BE REPRODUCED OR COPIED OR USED IN WHOLE OR IN PART AS THE BASIS FOR THE MANUFACTURE OR SALE OF ITEMS WITHOUT WRITTEN PERMISSION.
COPYRIGHT © DIGITAL EQUIPMENT CORPORATION

ECO MODULE REFERENCE

ECO NO.	SUMMARY OF ECO (NOTE: MODULE WAS RELEASED AT C.S. REV B)	PRINT CHANGE LOCATIONS	MODULE STAMPED REVISION	CIRCUIT SCHEMATIC REVISION	ECO REQUIREMENTS 1	2	3	4	5	6	7	8	9
1	ADD (2) STAND-OFFS	STAND-OFFS GLUED ON WITH ECCO BOND	C	C	□								
2	DID NOT EFFECT "C" REV ETCH MODULES				*	*							
3	REMOVE 16-150Ω RESISTORS, ADD 16-D672 DIODES (D101-116)	SEE SHEETS 3&4 AREA 1-D	E	C1	□	*	□						
4	DID NOT EFFECT "C" REV ETCH MODULES				*	*	*	*					
5	FIXED DCLO 3-ETCH CUTS, 3 JUMPERS	SEE SHEET 2 AREA 2-B	E1	1	□	*	□	*	□				
6	IF ECO #6 IS NOT INSTALLED REF TABLE BELOW QTY 20 — REF DESIGNATION: T1-20 — DESCRIPTION: TRANSFORMER — PART NO.: 1909651 — ITEM: 40 QTY 80 — REF DESIGNATION: R11-26, 37-52, 61-76, 123-138, 158-173 — DESCRIPTION: 150Ω RES. — PART NO.: 1300250 — ITEM: 53 QTY 80 — REF DESIGNATION: C30-45, 57, 60-73, 58, 75-106, 109-124 — DESCRIPTION: 680PF CAP. — PART NO.: 1000026 — ITEM: 7	SEE SHEET 3&4 AREA 1-C	E2	2	□	*	□	*	□	□			
7	DRILL BOARDS IN BOARD FABRICATION TO INSTALL NEW STAND-OFFS WITH SCREWS GENERATE CORRECT PRINTS MODULE STAMPED E → C.S. PRINT REQUIRED C1; E1 → 1; E2 → 2	SEE SHEET 1 AREA 2-F	3	3	*	*	□	*	□	*	□		
8	CHANGE VALUE OF C52 FROM: 680 PF TO: 470PF	SEE SHEET 2 AREA 2-C	3A	3A	△	*	□	*	□	*	△	□	
9	GENERATE A PRINT THAT SHOWS ECO STATUS AND UPDATE PRINTS TO DEC STANDARDS	PRINT CHANGE ONLY	E4	E4	△	*	□	*	□	*	△	□	□

NOTES:

1. THIS PRINT IS FOR "C" REV ETCH MODULES ONLY.
2. THIS CHART IS DESIGNED TO ALLOW THIS G231 CIRCUIT SCHEMATIC TO BE USED WITH ALL PREVIOUS REVISION MODULES
3. TABLE IS USED AS FOLLOWS:
   - A. LOCATE REVISION LETTER STAMPED ON THE HANDLE.
   - B. FOLLOW THE MODULE STAMPED REVISION COLUMN TO FIND APPROPRIATE REV.
   - C. NOTICE SYMBOLS TO RIGHT OF REVISION LETTER, THESE SYMBOLS WILL INDICATE ECO REQUIREMENTS FOR THAT MODULE.
4. SYMBOLS:
   - □ = REQUIRED
   - △ = ONE OR THE OTHER IS REQUIRED
   - * = NOT REQUIRED

UNLESS OTHERWISE SPECIFIED DIMENSIONS ARE IN INCHES TOLERANCES DECIMALS .XX = .02 .XXX = .005 REMOVE BURRS AND BREAK SHARP CORNERS		digital EQUIPMENT CORPORATION	
MATERIAL		TITLE: PDP-11 MEMORY DRIVER (MD5)	
FINISH	SCALE NONE SHEET 5 OF 5	SIZE D CODE CS NUMBER G231-0-1 REV E4	

D CS G231-0-1 E4

NOTES:
1. UNLESS OTHERWISE SPECIFIED ALL RESISTORS WILL BE 82Ω ½W 5% AND ALL CAPACITORS WILL BE 120 PF 100V 5% DM
2. NOTE POLARITY OF 3.9UF CAPS.
3. THIS PRINT IS FOR C REV ETCH MODULES ONLY.

58 REF
5 REF
A
S1
S2
S3
S4
DL1
DL2
DL3
T10
T8
T6
T4
T9
T7
T5
T3
VIEW A-A
+5V
-5V
FRQ+5V

4		SCREW NYLON #4-40X3/16"	9006401-0467	F
4	SI-S4	1/4"X7/16 L-#4-40STRANDED	9009306	60
36	LOCTITE BOND-26	USE AS NEEDED	N/A	59
16	R37-R52	RES 2K 1/4W 5%	1302388	64
1	DL3	DELAY LINE D-1000	1609579	63
2	R116, R118	RES 220 1/4W 5%	1300277	62
AR		WIRE JUMPER #30 BARE STRD SILVER	1700029	61
29		SOLDT LUGS	9004335	60
				59
1		HANDLE ASSY	1210711	58
1	E33	IC DEC 74H40	1905586	57
1	E27	IC DEC 74H10	1909057	56
1	E36	IC DEC 7475	1909058	55
1	E6	IC DEC 7400	1919155	54
1	E1	IC DEC 74H55	1909083	53
1	E26	IC DEC 7402	1909084	52
1	E38	IC DEC 741221	1910230	51
2	E13,E24	IC DEC 8242	1920712	50
7	E41, E47, E53, E58, E14, E34, E38	IC DEC 7437	1910091	49
1	E32	IC DEC 74H11	1909287	48
1	E28	IC DEC 74H53	1909063	47
9	E40, E43, E46, E49, E52, E55, E58, E61	IC DEC 7520	1910837	46
6	E35, E44, E56 E58, E62, E14	IC DEC 74H04	1909031	45
11	E39, E42, E45 E51, E54, E57 E60, E63, E3, E4, E40	IC DEC 74H74	1909667	44
8	E18-E22, E5	IC DEC 74H61-1	1909849	43
8	E8 THRU 12 E23, E7, E29	IC DEC 7320	1910298	42
3	E17, E25, E31	IC DEC 7486	1909575	41
4	E4, T8, T8, T10	3 TAP 5.72 OHM LINE	1609996	40
4	E3, T5, T7, T9	XFMR 117F17	1638478-1	39
2	E2, E28	IC DEC 7474	1905547	38
1	DL1	DELAY LINE DL5183	1609579	37
1	DL2	DELAY LINE DL5184	1609578	36
16	R1 THRU R16	5STR 2K7734	1510863	35
1	R29	5STR DEC 3K898	1543788	34
1	R18	5STR 2K3762	1540849	33
7	R107 THRU R112, R126	RES 4.75 1/4 W 5%	1300443	32
2	R105, R106	RES 100 1/4 W 5%	1300232	31
1	R103	RES 220 1/4 W 5%	1300293	30
14	R83 THRU R96	RES 13.8 1/4 W 1%	1310832-8-1	29
32	R1 THRU R32	RES 75 1/4W 1%	1303884	28
1	R126	RES 316 1/4 W 1%	1301872	27
1	R102	RES 348 1/4 W 1%	1311896	26
4	R50, R53, R80, R81	RES 619 1/4W 1%	1308324	25
3	R123, R122, R115	RES 10 1/4 W 5%	1300301	24
3	R113, R100, R103	RES 200 1/4 W 5%	1300309	23
2	C145, C146	CAP 3.9MF 10V 20% ALUM ELECT	9000248	22
1	R117	RES 100 1/4 W 5%	1300229	21
16	R33 THRU R48	RES 82 1/4 W 5%	1301781	20
4	R55, R57, R58, R82	RES 19.6 1/4W 1%	1303080	19
1	R119	RES 5.45 K 1/4W 1%	1303047	18
1	R120	RES 54.9K TRIMPOT	1309145-09	17
1	D13	DIODE 1N5142	1105873	16
48	D1 THRU D32, D33 THRU D48	DIODE 1N914	1105279	15
16	D5 THRU D12	DIODE 1N540	1106116	14
29	C96, C102 THRU C120 C146 THRU C149	CAP .01 MF 100V 20% DISC	10-01010	13
29	C43, C45, C47, C49, C51, C53, C55, C57, C59, C61, C63, C65, C67, C69, C71, C73, C75, C77, C79, C81, C83, C85, C87, C89, C91, C93	CAP .22 MF 50V 20% CERAM	1010274	12
16	C98 THRU C113	CAP .001 FUF 100V 20% STAND	1101762	11
16	C97 THRU C84	CAP 1000PF 100V 5% DISC	10-00847	10
8	C1, C2, C3, C4, C5, C6, C7, C8, C94, C95	CAP 120 PF 100V 5% DM	10-00819	9
8	C121 THRU C128	CAP 10MF 20V 10%	10-00814	8
5	C144, C129, C132, C140, C95, C31	CAP 6.8MF 20V 10% TANT	10-00305	7
2	C96, C95, C152	CAP 390F 100V 5% DM	1000869	6
17	C40, C41, THRU C116	SOCKET 40-6-T	9005732	5
REV		CHANGE PER DIS 1009	D-01-0169-44	4
REV		MODIFY/UTILIZING PART 1210711	D-01-0169-43	3
REV		E-F ENGINEERING RELEASE/LAYOUT	D-01-0169-42	2
REV		ETCHED CIRCUIT BOARD	9007909	1
QTY.	REF DESIGNATION	DESCRIPTION	PART NO.	

ETCH BOARD REV C

EQUIPMENT CORPORATION

CONTROL & DATA LOOPS (CDL)

SIZE B

DOC NO

REV NO

SHEET 1 OF 1

1977SIAE	SAME	
0672	14 3698	
0226	4 3706	
DEC NO	ECO NO	

SEMICONDUCTOR CONNECTION CHART

This drawing and specifications, herein, are the property of Digital Equipment Corporation and shall not be reproduced or copied or used in whole or in part as the basis for the manufacture or sale of items without written permission.

	W5	W10
4K	IN	OUT
8K	OUT	IN

MEMORY BANK SIZE

W'S 2,3,4,5,6 PROGRAM MEMORY BANK LOCATION. CUT JUMPER FOR BUS A LINE LOW (ASSERTED) WHEN BANK SELECTED. W5 MUST BE IN WHEN USED AS 8K BANK

DEVICE SELECT CIRCUIT (DSELH)

HIGH WHEN MEMORY BANK IS SELECTED

* USE INSULATED JUMPERS IN POSITIONS SHOWN BY DOTTED LINES WHEN INTERLEAVING

-5V SUPPLY

-5V TO SENSE AMPS

-15V

SPARES

BYTE MASKING LOGIC

PROTECT LOW

25NS/TAP

DELAY FF RESET

READ H

MSEL RESET

WRITE RESTART L

WRITE RESTART ONE SHOT CKT

TO IN DRIVERS

DATA OUT H TO BUS DRIVERS

RESET 1 L

TO DATA 7474 F.F.

RESET ØL

STROBE 1H

TO SENSE AMPS (9528)

STROBE ØH

LOAD ØH

LOAD 1H

AØ LATCH

CØ LATCH

C1 LATCH

FIRST USED ON OPTION/MODEL	QTY	DESCRIPTION	PART NO	ITEM NO
MMII-L		PARTS LIST		

UNLESS OTHERWISE SPECIFIED DIMENSION IN INCHES TOLERANCES

DECIMALS	ANGLES
XXX - .000	10° 30'
XX - .02	
X - .1	

REMOVE BURRS AND BREAK SHARP CORNERS SURFACE QUALITY ✓

	NAME	DATE
DWN	J Carbonaro	1-6-72
CHK'D	J Belzyla	1-6-72
ENG	J Durant	1-6-72
PROJ ENG	J Durant	1/25/72
PROD	J K Fitz	1-31-72

MATERIAL

FINISH

NEXT HIGHER ASSY: 8-DD-MMII-L

SCALE

SHEET 2 OF 5

DIGITAL EQUIPMENT CORPORATION MAYNARD MASSACHUSETTS

TITLE: CONTROL DATA LOOPS (CDL2)

SIZE D | CODE DCS | NUMBER G110-0-1 | REV E5

DIST

CDL2 -5V
+5V
CDL2LOADØH
CDL2RESETØL
-15V

ØBSB EV2 ØASA EV1 — ØBSB EV2 ØASA EV1 D4 D3 2K R38 T9 C1 39 PF E61 7528 R4 R3 75Ω
ØSSB EM2 ØSSA EM1 — ØSSB EM2 ØSSA EM1 D6 D5 2K R39 T8 C4 39 PF E58 7528 R6 R5 75Ω
Ø2SB EL2 Ø2SA EL1 — Ø2SB EL2 Ø2SA EL1 D12 D11 2K R42 T7 C5 39 PF E55 7528 R12 R11 75Ω
Ø6SB EJ2 Ø6SA EJ1 — Ø6SB EJ2 Ø6SA EJ1 D10 D9 2K R41 T7 C6 39 PF E55 7528 R10 R9 75Ω C21
Ø3SB EH2 Ø3SA EH1 — Ø3SB EH2 Ø3SA EH1 D16 D15 2K R44 T7 C7 39 PF E52 7528 R16 R15 75Ω C32
Ø7SB EF2 Ø7SA EF1 — Ø7SB EF2 Ø7SA EF1 D14 D13 2K R43 T7 C8 39 PF E52 7528 R14 R13 75Ω
Ø1SB EP2 Ø1SA EP1 — Ø1SB EP2 Ø1SA EP1 D8 D7 2K R40 T9 C3 39 PF E58 7528 R8 R7 75Ω
Ø4SB EJ2 Ø4SA EJ1 — Ø4SB EJ2 Ø4SA EJ1 D2 D1 2K R37 T9 C2 39 PF E61 7528 R2 R1 75Ω C19

SENSE TERMINATIONS

SPARES
E56 74H04 (1→2)
E56 74H04 (3→4)
E62 74H04 (3→4)
E62 74H04 (5→6)
E85 74H04 (9→8)

SENSE AMPS

E62 74H04 ×6
E56 74H04 ×6
E35 74H04
RS6 2.99K RS5 3.57K C30 .22 UF
RS8 4.99K RS7 .22 UF C22 3.9 UF

CDL2 STROBE ØH
+5 REF FA2

INVERTER BUS REQS, DATA LATCHES

E11 7380 ×2
E10 7380 ×2
E7 7380
E39 74H74
E57 74H74
E54 74H74
E40 74H74

BUS DRS

E22 74H01-J ×4
E21 74H01-J ×4
E18 74H01-J

CDL2 DATA OUT H
CDL2 TINH ØH

INH BASE DRIVERS

E38 7437

AMI BUS PAL

ØPIN EU2 — BUS DØL — R66 — C49 .005 UF — E59 7437 — Q1 — T10 — C67 1000 PF — RB6 — D57 — D37
ØAIN EK2 — BUS DØL — R65 — C50 .005 UF — E59 7437 — Q2 — T10 — C69 1000 PF — RB5 — D58 — D38
ØIIN ER1 — BUS DØL — R67 — C52 .005 UF — E59 7437 — Q4 — T10 — C68 1000 PF — RB4 — D56 — D40
ØSIN EM2 — BUS DØL — R68 — C51 .005 UF — E59 7437 — Q3 — T10 — C70 1000 PF — RB3 — D55 — D39
Ø2IN EM1 — BUS DØL — R70 — C53 .005 UF — E53 7437 — Q5 — T8 — C71 1000 PF — RB0 — D61 — D41
ØGIN EJ2 — BUS DØL — R69 — C54 .005 UF — E53 7437 — Q6 — T8 — C73 1000 PF — RB9 — D62 — D42
Ø3IN EJ1 — BUS DØL — R71 — C56 .005 UF — E53 7437 — Q8 — T8 — C72 1000 PF — RB8 — D60 — D44
ØFIN EE2 — BUS DØL — R72 — C55 .005 UF — E53 7437 — Q7 — T8 — C74 1000 PF — RB7 — D59 — D43

16-09996 D664 ×6

AC BUS DØL
AE BUS DØL
AD2 BUS DØL
AF2 BUS DØL
AD BUS DØL
AF BUS DØL
AH2 BUS DØL

INHIBIT DRIVERS

+5V

NOTES:

1. ALL SIGNALS FROM UNIBUS (BUS DØL TO BUS D07L), G110 SHEET 2 (CDL2) OR STACK (Ø05A,B TO Ø75A,B AND ØØIN TO Ø7IN)
2. UNLESS SPECIFIED:
   ALL RESISTORS ARE 82Ω ½W 5%
   ALL CAPACITORS ARE 120 PF 100V 5%
   ALL TRANSFORMERS ARE 16-09478-01
   ALL DIODES ARE D672
   ALL TRANSISTORS ARE DEC-3734
3. ECO#2 DID THE FOLLOWING:
   C1-C8 CHANGED FROM 68 PF TO 39 PF
   R37-R44 CHANGED FROM 330Ω TO 2K
   C49-C56 CHANGED FROM .0022μf TO .005μf
4. ECO#8 DID THE FOLLOWING:
   R56, R58 CHANGED FROM 5.62K TO 4.99K
   C20, C22 CHANGED FROM .22μf TO 3.9μf
5. ECO#13 ADD JUMPER E35 PI TO GND.

REVISIONS	CHANGE NO	REV
CHK		

FIRST USED ON OPTION/MODEL	QTY.	DESCRIPTION	PART NO.	ITEM NO
MMII-L		PARTS LIST		

UNLESS OTHERWISE SPECIFIED DIMENSION IN INCHES TOLERANCES
DECIMALS .XXX ± .005 .XX ± .02 .X ± .1 ANGLES ±0° 30'
REMOVE BURRS AND BREAK SHARP CORNERS SURFACE QUALITY ✓
MATERIAL —
FINISH —

DBN F Gaberg DATE 11/8/72
CHK'D D Ralph DATE 12/1/72
ENG. F Bulmer DATE 12/7/72
PROJ ENG. P Divecha DATE 12/7/72
PROD. R V Peterson DATE 12/13/72

EQUIPMENT CORPORATION MAYNARD MASSACHUSETTS

TITLE: CONTROL & DATA LOOPS (CDL3)

NEXT HIGHER ASSY. B-DD-MMII-L
SIZE D CODE CS NUMBER G110-0-1 REV E6
SCALE —
SHEET 3 OF 5
DIST

DRAWING NO. D CS G110-0-1 REV E6

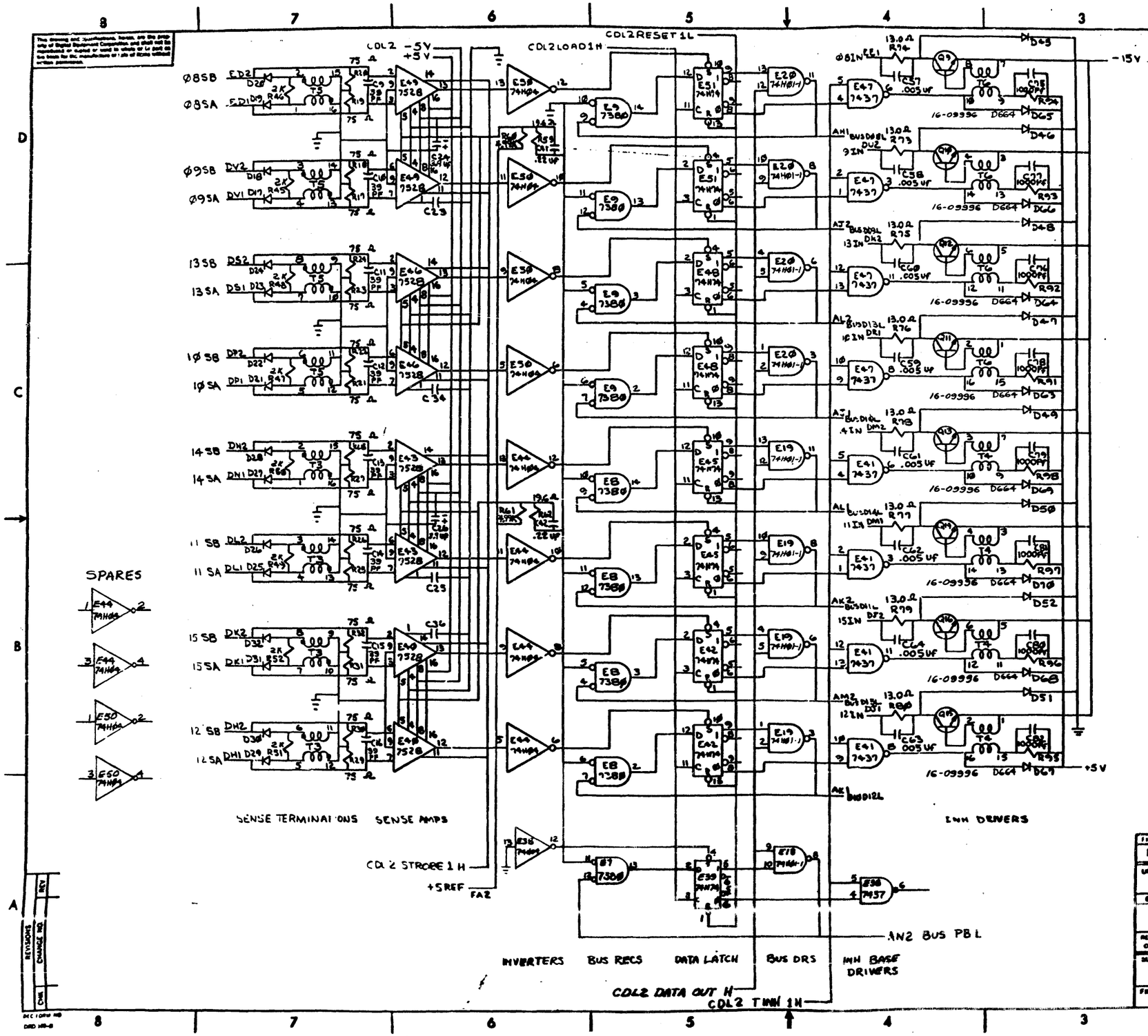

NOTES:

1. ALL SIGNALS FROM UNIBUS (BUS DOBL-DISL) G110 SHEET 2 (CDL2) OR STACK (Ø8SA,B TO 15SA,B AND Ø8IN TO 15IN)
2. UNLESS SPECIFIED:
   ALL RESISTORS ARE 82Ω ½W 5%
   ALL DIODES ARE D672
   ALL CAPACITORS ARE 120 PF 100V 5%
   ALL TRANSFORMERS ARE 16-09478-01
   ALL TRANSISTORS ARE DEC-3734
3. ECO #2 DID THE FOLLOWING:
   C9-C16 CHANGED FROM 68 PF TO 39 PF.
   R45-R52 CHANGED FROM 330Ω TO 2K
   C57-C64 CHANGED FROM .0022 μf TO .005 μf
4. ECO #8 DID THE FOLLOWING:
   R60, R61 CHANGED FROM 5.62K TO 4.99K
   C24, C26 CHANGED FROM .22 μf TO 3.9 μf
5. ECO #13 ADD JUMER E35P13 TO GND.

FIRST USED ON OPTION/MODEL: MMII-L	QTY.	DESCRIPTION	PART NO / ITEM NO.
UNLESS OTHERWISE SPECIFIED DIMENSION IN INCHES, TOLERANCES		PARTS LIST	
DECIMALS / ANGLES	DRN / CHK'D / ENG / PROJ ENG / PROD	DATE 11/13/72 / DATE 1-2-72 / DATE 1-1-72 / DATE 11-1-72 / DATE 1-31-72	EQUIPMENT CORPORATION MAYNARD MASSACHUSETTS
REMOVE BURRS AND BREAK SHARP CORNERS SURFACE QUALITY ✓			TITLE: CONTROL & DATA LOOPS (CDL 4)
MATERIAL: —	NEXT HIGHER ASSY.: B-DD-MMII-L		SIZE: D / CODE: CS / NUMBER: G110-0-1 / REV.: EB
FINISH: —	SCALE: — / SHEET 4 OF 5		DIST

REVISIONS: CHK / CHANGE NO. / REV

"THIS DRAWING AND SPECIFICATIONS, HEREIN, ARE THE PROPERTY OF DIGITAL EQUIPMENT CORPORATION AND SHALL NOT BE REPRODUCED OR COPIED OR USED IN WHOLE OR IN PART AS THE BASIS FOR THE MANUFACTURE OR SALE OF ITEMS WITHOUT WRITTEN PERMISSION.
COPYRIGHT © DIGITAL EQUIPMENT CORPORATION"

E.C.O. MODULE REFERENCE

ECO. NUMBER	SUMMARY OF E.C.O	PRINT CHANGE LOCATION	MODULE STAMPED REVISION	CIRCUIT (SCHEM.) REVISION	E.C.O. REQUIREMENTS 1	2	3	3A	4	5	6	7	8	9	9A	10	10A	11	12	13
1	CHANGE R116, R118 FROM 1K TO 220Ω. CUT ETCH FROM E2-P3 TO E5-P4 & TO E15-P4. ADD JUMPERS FROM E2-P3 TO GND, FROM E5-P4 TO E15-P4, CUT ETCH FROM E2-P4 TO E2-P2, ADD JUMPER FROM E2-P4 TO DL2-P3, CUT ETCH FROM E26-P8 TO DL1-P10 ADD JUMPER FROM E26-P8 TO DL1-P9.		A	A	□															
2	CHANGE SENSE TERM. CAPS FROM 68 PF TO 39 PF (C1-C6, 10 PARTS), CHANGE BALUN R'S'S, R37-R54 FROM 330Ω TO 1K (16 PARTS), CHANGE INH. BY PASS CAPS, C49-C64, FROM .0022 UF TO .005 UF (16 PARTS) CHANGE DL3 FROM 50NS TO 100NS DELAY LINE CHANGE TERM. RES R115 FOR DL3 FROM 390Ω TO 1K	SHT 3 & 4 AREA 2-C SHT 2 AREA 4-C SH. 2 AREA 4-C	B	B	□	□														
3	DID NOT EFFECT C REV ETCH MODULES		—	—	*	*	*													
3A	DID NOT EFFECT C REV ETCH MODULES		—	—	*	*	*	*												
4	DL3 NOT TERMINATED PROPERLY, CHANGE R115 FROM 1K TO 1K, CUT ETCH FROM DL3 OUT TO E16-P8, CUT ETCH FROM DL3 IN TO E2-P1, ADD JUMPER FROM DL3 IN TO E16-P8, ADD JUMPER FROM DL3 OUT TO E2-P1; GLUE DOWN DL2 WITH ECCO BOND	SHEET 2 AREA 4-C SHT 1 AREA 3-D	D	D	□	□	*	*	□											
5	REVERSE C152, SO THAT + SIDE OF CAP. GOES TO +5V INSTALL 4 - 1/8" OD X 3/8 LG STAND-OFFS	SHT 1 AREA 4-E 2-E	E	E	□	□	*	*	□	□										
6	DID NOT EFFECT C REV ETCH MODULES				*	*	*	*	*	*	*									
7	DRILL BLANK BOARD, AND INSTALL (4) STANDOFFS & SCREWS	SHT 1 AREA 2-P	E1	E1	□	□	*	*	□	□	*	□								
8	CHANGE R56, 58, 60, 61 FROM 5.62K TO 4.99K CHANGE C20, 22, 24, 26, 29, 31, 33, 35 FROM .22 UF TO 3.9 UF — CHANGE C44-47 FROM .22 UF TO .01 UF	SHT 3 & 4 AREA 2-C SHT 1 AREA 5-C SHTS 3-4 AREA 2-C SHT 1 AREA 3-C	E2	E2	□	□	*	*	□	○	*	○	□							
9	INSTALL GND JUMPERS ON SIDE 1, CHANGE PART NO. OF #18 WIRE FROM 9107360-00 TO 1700029	SHEET 1	H	E3	□	□	*	*	□	○	*	○	□	□						
9A	RESTAMP HANDLE E-3, CHANGE PRINT FROM H TO E-3		E3	E3	□	□	*	*	□	○	*	○	□	□	□					
10	REMOVE E28, CUT ETCH FROM E28-P13 TO E28-P2 ADD E28 AND JUMPER E28-P13 TO E15-P10		J	E4	□	□	*	*	□	○	*	○	□	*	*	□				
10A	RESTAMP HANDLE E-4, CHANGE PRINT REV FROM J TO E4		E4	E4	□	□	*	*	□	○	*	○	□	*	*	□	□			
11	CANCELED	———	—	—	—	—	—	—	—	—	—	—	—	—	—	—	—	—	←	
12	PRINT CHANGE ONLY		E5	E5	□	□	*	*	□	○	*	○	□	*	*	□	□	—	□	
13	ADD 2 JUMPERS SO THAT PAL AND PBL ARE HIGH ON THE BUS		E6	E6	□	□	*	*	□	○	*	○	□	*	*	□	□	—	□	□

NOTES:

1. THIS PRINT IS FOR 'C' REV. ETCH MODULES ONLY.
2. THIS CHART IS DESIGNED TO ALLOW THIS G110 CIRCUIT SCHEMATIC TO BE USED WITH ALL PREVIOUS REVISION MODULES
3. CHART IS USED AS FOLLOWS:
   A. LOCATE REVISION LETTER STAMPED ON HANDLE
   B. FOLLOW THE MODULE STAMPED COLUMN TO FIND APPROPRIATE REVISION
   C. NOTICE SYMBOLS TO RIGHT OF REVISION LETTER, THESE SYMBOLS WILL INDICATE ECO REQUIREMENTS FOR THAT MODULE.
4. SYMBOLS:
   □ = REQUIRED
   △ = ONE OR THE OTHER IS REQUIRED
   ○ = ONE OR THE OTHER IS REQUIRED BUT (C152 MUST BE CHANGED)
   * = NOT REQUIRED

FIRST USED ON OPTION/MODEL: MMI1-L	QTY.	DESCRIPTION: PARTS LIST	PART NO.	ITEM NO.	
UNLESS OTHERWISE SPECIFIED DIMENSION IN INCHES. TOLERANCES: DECIMALS .XXX = .005, .XX = .02, .X = .1; ANGLES ±0° 30'. REMOVE BURRS AND BREAK SHARP CORNERS SURFACE QUALITY √	DRN. L.G.	DATE 12-22-72	digital EQUIPMENT CORPORATION MAYNARD MASSACHUSETTS		
	CHK'D.	DATE	TITLE: CONTROL & DATA LOOPS (CDL5)		
	ENG.	DATE			
	PROJ. ENG.	DATE			
	PROD.	DATE			
MATERIAL — / —	NEXT HIGHER ASSY. B-DD-MMI1-L		SIZE D	CODE CS	NUMBER G110-Ø-Ø REV. E6
FINISH — / —	SCALE NONE		DIST.		
	SHEET 5 OF 5				

NOTES:
1. ALL COMPONENT LEADS TO BE LESS THAN 1/16 INCHES LONG ON SIDE TWO OF MODULE

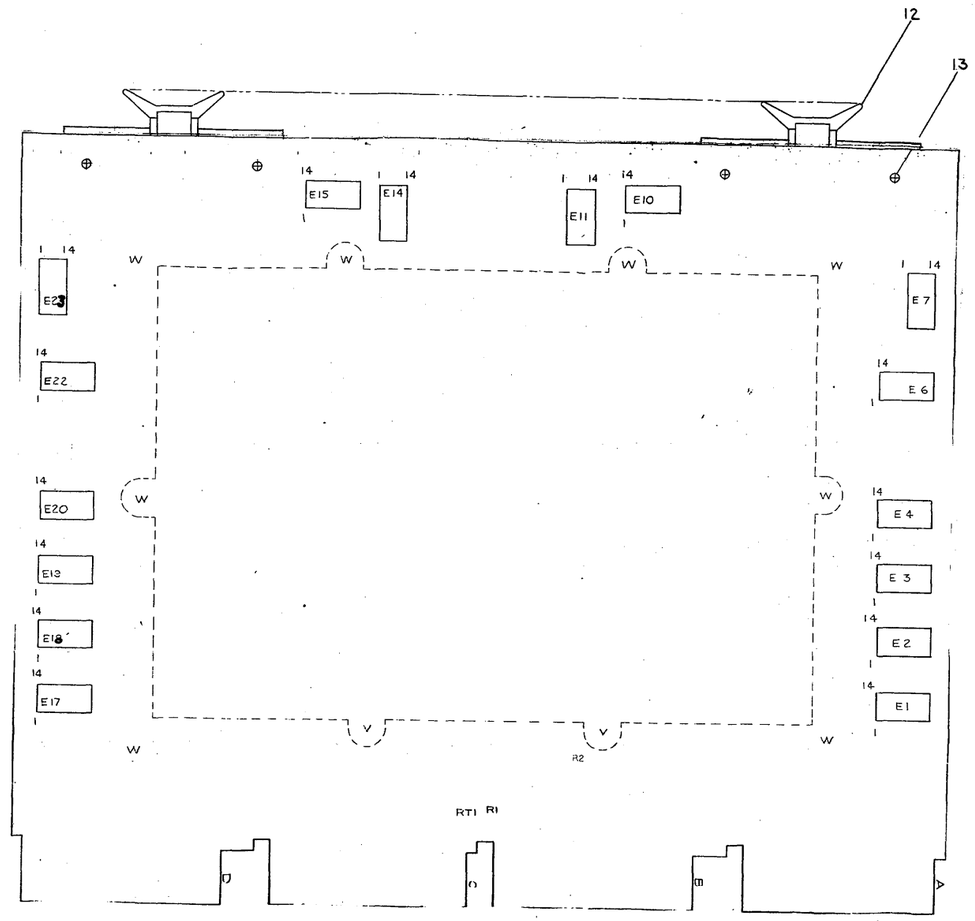

LEGEND	
MODULE CONN	BACK PANEL LOCATION
A	C
B	D
C	E
D	F

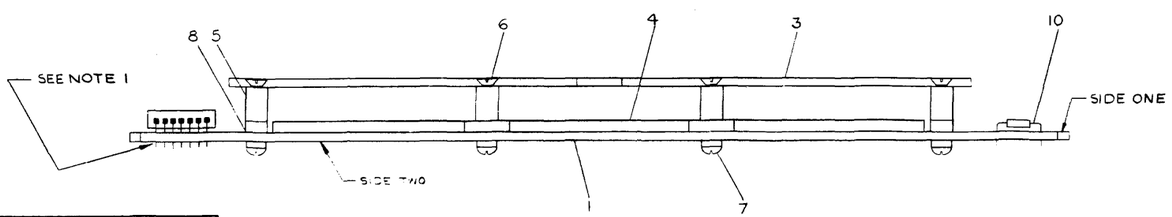

QTY	REF DESIGNATION	DESCRIPTION	PART NO.	ITEM NO.
1	RT1	THERMISTOR 300 2%	1309785	16
1	R2	RESISTOR 5.1 1/4W 5%	1309422	15
1	R1	RESISTOR 196 1/8W 1%	1302956	14
8		EYELET	9006732	13
4		HANDLE, GREEN	9008337-0-1	12
1		STICKER/DEC PART & PO NO.	VENDOR SUPP.	11
2		JUMPER		10
16		4096-CORE MATS (STRUNG)		9
4		WASHER, NYLON 1/32 X 1/4 (4-40 HOLE)		8
10		SCREW, NYLON FILISTER HD. #4-40X.19 LG.		7
10		SCREW, F.H. NYLON #4-40X.19 LG.		6
10		STANDOFF, THREADED #4-40 1/4 DIA X 1/4 LG.		5
1		SUBSTRATE		4
1		COVER PLATE	VENDOR SUPP.	3
16	E14, E15, E17-E20, E22, E23 E1-E4, E6, E7, E10, E11	I.C. DEC 2501	1910010	2
1		PLANER MEMORY BOARD	[illegible]	1

PARTS LIST

FIRST USED ON DPT/MOD: MM11-L

ETCH BOARD REV

REV	CHANGE NO.	REVISIONS
C	H213-00002	PDURANT
B	H213-00001	ORIGINATED
A		

DEC NO.	EIA NO.	DEC NO.	EIA NO.

SEMICONDUCTOR CONVERSION CHART

IC TYPE	GND	+5V
GND AND 5V ARE USUALLY PIN 7 AND 14 RESPECTIVELY EXCEPTIONS ARE STATED ABOVE		

IC PIN LOCATIONS

ITEM NO	AWG	FROM PT	TO PT

JUMPER LIST

[redacted] EQUIPMENT CORPORATION

TITLE

SIZE H213-0-1 C

SCALE

SHEET 1 OF 2

This drawing and specifications, herein, are the property of Digital Equipment Corporation and shall not be reproduced or copied or used in whole or in part as the basis for the manufacture or sale of items without written permission.

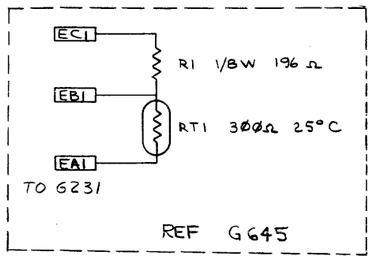

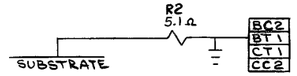

NOTES
1. UNLESS OTHERWISE SPECIFIED: IC'S ARE TO BE DEC PART # 1910010
2. INDICATES STACK LINE NUMBER. (TYP)
3. INDICATES CURRENT LOOP.
4. INDICATES MAGNET WIRE TERMINATION (SOLDERED TO P.C. PAD).

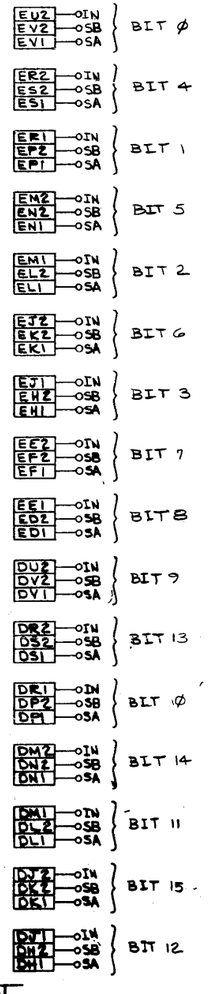

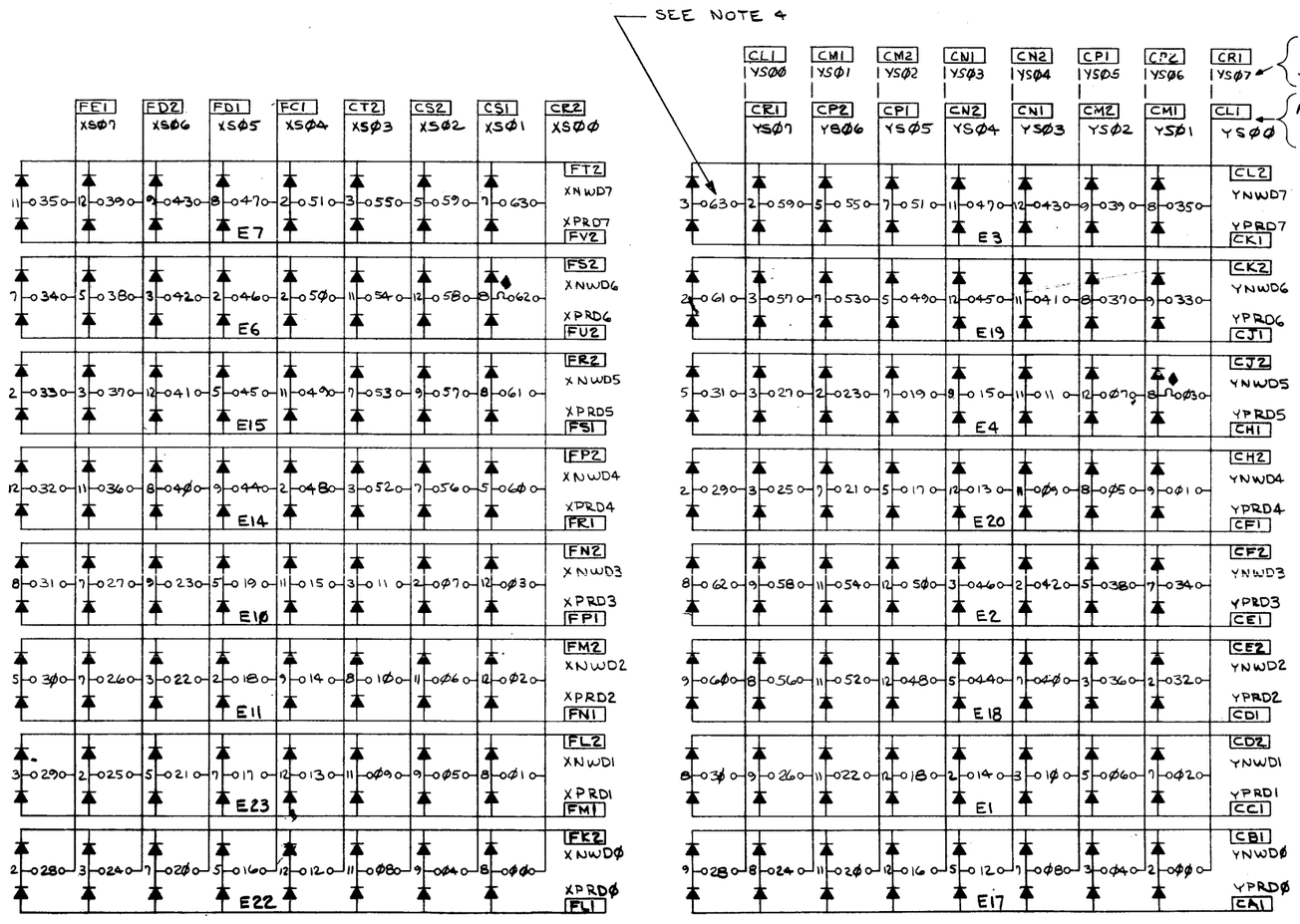

FIRST USED ON OPTION/MODEL	QTY.	DESCRIPTION	PART NO.	ITEM NO.
MM11-L		PARTS LIST		

UNLESS OTHERWISE SPECIFIED DIMENSION IN INCHES. TOLERANCES

DECIMALS	ANGLES
.XXX = .005	±0° 30'
.XX = .02	
.X = .1	

REMOVE BURRS AND BREAK SHARP CORNERS SURFACE QUALITY ✓

MATERIAL —//—

FINISH —//—

		DATE
DRN.	[signature]	12/1/71
CHK'D.	[signature]	1-25-72
ENG.	P. Durant	1-25-72
PROJ. ENG.	P. Durant	1-25-72
PROD.	[signature]	1-26-72

NEXT HIGHER ASSY. B-DD-MM11-L-0

SCALE —//—

SHEET 2 OF 2

[redacted] EQUIPMENT CORPORATION MAYNARD MASSACHUSETTS

TITLE STACK SCHEMATIC 4K X 16 BIT

SIZE	CODE	NUMBER	REV.
D	CS	H213-0-1	C

DIST.

REVISIONS: REV. | CHANGE NO. | CHK.

NOTES:
1. ALL COMPONENT LEADS TO BE LESS THAN 1/16 INCHES LONG ON SIDE TWO OF MODULE

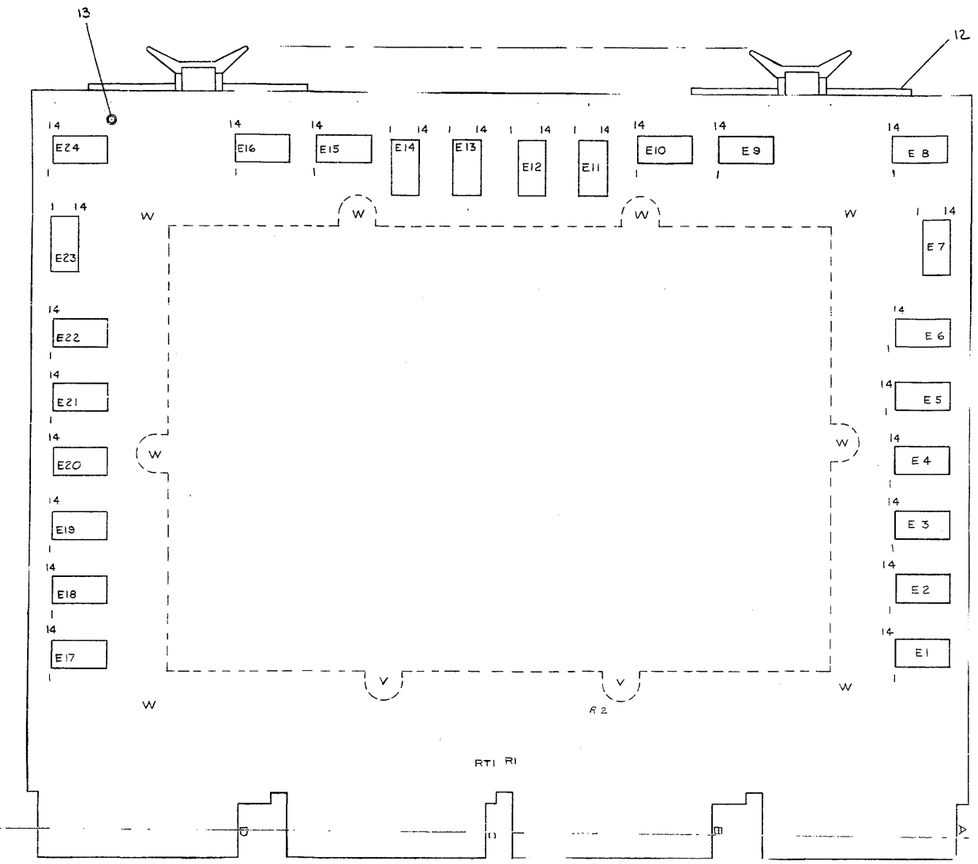

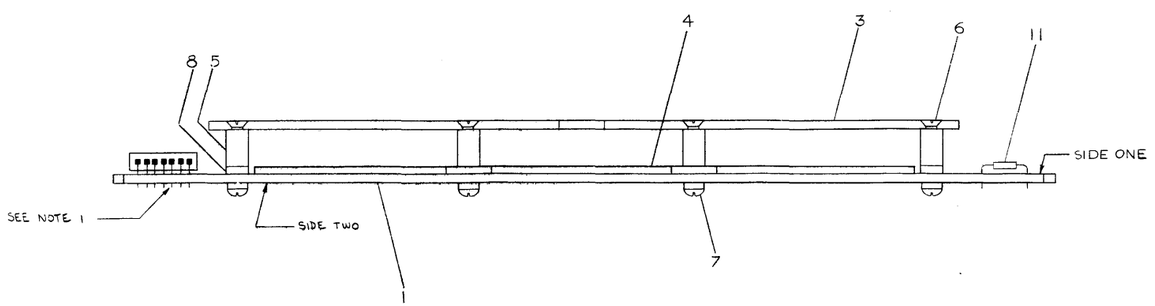

LEGEND	
MODULE CONN.	BACK PANEL LOCATION
A	C
B	D
C	E
D	F

H216	H215	H214				
1	1	1	RT1	THERMISTOR 300 2%	1309785	16
1	1	1	R2	RESISTOR 5.1 1/4W 5%	1309422	15
1	1	1	R1	RESISTOR 196 1/8W 1%	1302956	14
8	8	8		EYELET	9006732	13
4	4	4		HANDEL, GREEN	9008337-0-1	12
2	2	2		JUMPER,	VENDOR SUPP	11
1	1	1		STICKER WITH DEC PART & PO. NO.		10
19	18	16		8192-CORE MATS (STRUNG)		9
4	4	4		WASHER, NYLON 1/32 X 1/4 (440 HOLE)		8
10	10	10		SCREW, NYLON FILISTER #4-40 X .187 LG		7
10	10	10		SCREW, FLAT HEAD NYLON #4-40 X .187 LG		6
10	10	10		STANDOFF, THREADED #4-40 X 1/4 DIA X 1/4 LG		5
1	1	1		SUBSTRATE		4
1	1	1		COVER PLATE	VENDOR SUPP	3
24	24	24	E1 THRU E24	I.C. DIODE 2501	19-10010	2
1	1	1		PLANER MEMORY BOARD	5009713	1
QTY	QTY	QTY.	REF DESIGNATION	DESCRIPTION	PART NO.	

PARTS LIST

FIRST USED ON DPT/MOD: MM111

ETCH BOARD REV

IC TYPE	GND	+5V
GND AND 5V ARE USUALLY PIN 7 AND 14 RESPECTIVELY EXCEPTIONS ARE STATED ABOVE		

IC PIN LOCATIONS

ITEM NO	AWG	FROM PT	TO PT

JUMPER LIST

REV	CHANGE NO.	REVISIONS
A	ORIGINATED	
B	H214-00001	
C	H214-00002	

P. DURANT 1-18-73
P. DURANT 6-28-76
P. DURANT 6/20/72

DEC NO | FIA NO | DEC NO | FIA NO

SEMICONDUCTOR CONVERSION CHART

[redacted] EQUIPMENT CORPORATION

TITLE: STACK SCHEMATIC

H214-0-1 C

This drawing and specifications, herein, are the property of Digital Equipment Corporation and shall not be reproduced or copied or used in whole or in part as the basis for the manufacture or sale of items without written permission.

EC1 — R1 196 Ω — EB1 — RT1 300Ω @ 25°C — EA1
TO G231 REF G645

R2 5.1Ω — BC2, BT1, CT1, CC2 — SUBSTRATE

NOTES:
1. UNLESS OTHERWISE SPECIFIED IC'S E1-E24 ARE TO BE DEC PART # 19100 10
2. INDICATES STACK LINE NUMBER (TYP)
◆ 3. INDICATES CURRENT LOOP
—o 4. INDICATES MAGNET WIRE TERMINATION (SOLDERED TO P.C. PAD).
✳ 5. FOR H215 & H216 ONLY. PØ=PA, P1=PB
✳✳ 6. FOR H216 ONLY

SEE NOTE 4

EU2, EV2, EV1	IN, SB, SA	BIT Ø
ER2, ES2, ES1	IN, SB, SA	BIT 4
ER1, EP2, EP1	IN, SB, SA	BIT 1
EM2, EN2, EN1	IN, SB, SA	BIT 5
EM1, EL2, EL1	IN, SB, SA	BIT 2
EJ2, EK2, EK1	IN, SB, SA	BIT 6
EJ1, EH2, EH1	IN, SB, SA	BIT 3
EE2, EF2, EF1	IN, SB, SA	BIT 7
EE1, ED2, ED1	IN, SB, SA	BIT 8
DU2, DV2, DV1	IN, SB, SA	BIT 9
DR2, DS2, DS1	IN, SB, SA	BIT 13
DR1, DP2, DP1	IN, SB, SA	BIT 10
DM2, DN2, DN1	IN, SB, SA	BIT 14
DM1, DL2, DL1	IN, SB, SA	BIT 11
DJ2, DK2, DK1	IN, SB, SA	BIT 15
DJ1, DH2, DH1	IN, SB, SA	BIT 12
DE2, DF2, DF1	IN, SB, SA	BIT PØ ✳
DE1, DD2, DD1	IN, SB, SA	BIT P1 ✳
DB1, DA2, DA1	IN, SB, SA	BIT 19 ✳✳

FK1 XSØ5	FJ2 XSØ4	FJ1 XSØ3	FH2 XSØ2	FH1 XSØ1	FF2 XSØØ	FF1 XSØ9	FE2 XSØ8	FE1 XSØ7	FD2 XSØ6	FD1 XSØ5	FC1 XSØ4	CT2 XSØ3	CS2 XSØ2	CS1 XSØ1	CR2 XSØØ	
8 067	9 071	11 075	12 079	7 083	5 087	3 091	2 095	11 099	12 0103	9 0107	8 0111	2 0115	3 0119	5 0123	7 0127	FT2 XNWD7
			E8									E7				XPRD7 FV2
1 066	5 070	3 074	2 078	9 082	11 086	12 090	8 094	7 098	5 0102	3 0106	2 0110	9 0114	11 0118	12 0122	8 0126	FS2 XNWD6
			E5									E6				XPRD6 FU2
2 065	3 069	4 073	5 077	11 081	7 085	9 089	8 093	2 097	3 0101	12 0105	5 0109	11 0113	7 0117	9 0121	8 0125	FR2 XNWD5
			E16									E15				XPRD5 FS1
12 064	11 068	8 072	9 076	2 080	3 084	7 088	5 092	12 096	11 0100	8 0104	9 0108	2 0112	3 0116	7 0120	5 0124	FP2 XNWD4
			E3									E14				XPRD4 FR1
7 063	8 059	5 055	9 051	3 047	2 043	11 039	12 035	8 031	7 027	9 023	5 019	11 015	3 011	2 007	12 003	FN2 XNWD3
			E9									E10				XPRD3 FP1
5 062	7 058	3 054	2 050	9 046	8 042	11 038	12 034	5 030	7 026	3 022	2 018	9 014	8 010	11 006	12 002	FM2 XNWD2
			E12									E11				XPRD2 FN1
2 061	11 057	9 053	8 049	2 045	3 041	5 037	7 033	3 029	2 025	5 021	7 017	12 013	11 009	9 005	8 001	FL2 XNWD1
			E24									E23				XPRD1 FM1
2 060	3 056	7 052	5 048	12 044	11 040	8 036	9 032	2 028	3 024	7 020	5 016	12 012	11 008	9 004	8 000	FK2 XNWDØ
			E21									E22				XPRDØ FL1

CL1 YSØØ	CM1 YSØ1	CM2 YSØ2	CN1 YSØ3	CN2 YSØ4	CP1 YSØ5	CP2 YSØ6	CR1 YSØ7	DATA RAM STACK ONLY
CR1 YSØ7	CP2 YSØ6	CP1 YSØ5	CN2 YSØ4	CN1 YSØ3	CM2 YSØ2	CM1 YSØ1	CL1 YSØØ	ALL OTHERS STACK
3 063	2 059	5 055	7 051	11 047	12 043	9 039	8 035	CL2 YNWD7
				E3				YPRD7 CK1
2 061	3 057	7 053	5 049	12 045	11 041	8 037	9 033	CK2 YNWD6
				E19				YPRD6 CJ1
5 031	3 027	2 023	7 019	9 015	11 011	12 007	8 003	CJ2 YNWD5
				E4				YPRD5 CH1
2 029	3 025	7 021	5 017	12 013	11 009	8 005	9 001	CH2 YNWD4
				E20				YPRD4 CF1
8 020	9 058	11 054	12 050	3 046	2 042	5 038	7 034	CF2 YNWD3
				E2				YPRD3 CE1
9 060	8 056	11 052	12 048	5 044	7 040	3 036	2 032	CE2 YNWD2
				E18				YPRD2 CD1
8 030	9 026	11 022	12 018	2 014	3 010	5 006	7 002	CD2 YNWD1
				E1				YPRD1 CC1
9 028	8 024	11 020	12 016	5 012	7 008	3 004	2 000	CB1 YNWDØ
				E17				YPRDØ CA1

FIRST USED ON OPTION/MODEL	QTY.	DESCRIPTION	PART NO.	ITEM NO.
MM11-_	PARTS LIST			

UNLESS OTHERWISE SPECIFIED DIMENSION IN INCHES TOLERANCES
DECIMALS: XXX ± .005, XX ± .02, X ± .1 — ANGLES: ± 0° 30'
REMOVE BURRS AND BREAK SHARP CORNERS SURFACE QUALITY ✓
MATERIAL — FINISH

DRN F. Gahagan 11/22/71
CHK'D J. Hodge 12-5-72
ENG — DATE
PROJ ENG — DATE
PROD. F. Peterson 12-26-72
NEXT HIGHER ASSY 8-DD-MM11-_-_
SCALE —
SHEET 2 OF 2

digital EQUIPMENT CORPORATION MAYNARD MASSACHUSETTS

TITLE STACK SCHEMATIC (-1 SHEET 1 OF 2, -2 SHEET 2 OF 2)

SIZE D | CODE CS | NUMBER H214-Ø-1 | REV C | DIST

REVISIONS: REV | CHANGE NO | CHK
DRAWING 40-523 10940
DEC-11-OSSB-NO
DRD NOS-B

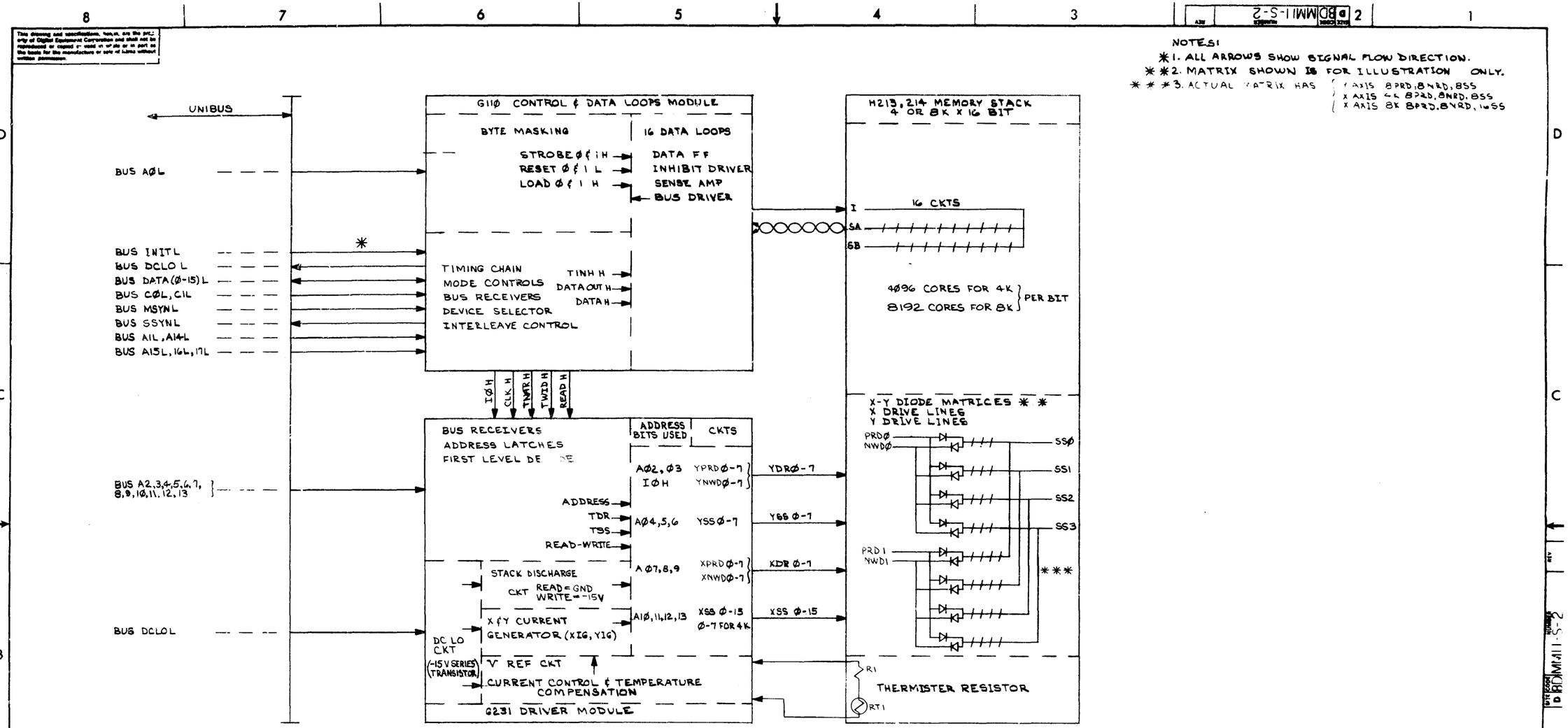

FIRST USED ON OPTION/MODEL	QTY	DESCRIPTION	PART NO	ITEM NO.
MM11-S		PARTS LIST		

UNLESS OTHERWISE SPECIFIED DIMENSION IN INCHES TOLERANCES

DECIMALS	ANGLES
.XXX = .005	±0° 30'
.X = .1	

REMOVE BURRS AND BREAK SHARP CORNERS SURFACE QUALITY ✓

MATERIAL

FINISH

DRN.	L. Carberry	DATE 1/14/72
CHK'D.	J. Kalagher	DATE 2-16-72
ENG.	P. Duvault	DATE 3-30-72
PROJ. ENG.	P. Duvault	DATE 3-31-72
PROD.	Jack Gorman	DATE 6-3-72

digital EQUIPMENT CORPORATION MAYNARD MASSACHUSETTS

TITLE BLOCK DIAGRAM

NEXT HIGHER ASSY. B-DD-MM11-S

SCALE

SHEET 1 OF 2

SIZE D CODE BD NUMBER MM11-S-2 REV

DIST

REVISIONS: CHK | CHANGE NO | REV

DEC FORM NO

This drawing and specifications, herein, are the property of Digital Equipment Corporation and shall not be reproduced or copied or used in whole or in part as the basis for the manufacture or sale of items without written permission.

MEMORY BANK	MACHINE ADDRESS	W1 ✱	W5 A13 △	W6 □ A14 OR AB1	W4 A15	W3 A16	W2 A17L	△ W9 4K-8K	W10	W7-8 INTER LEAVE □	W11 PROTECT
0-4K 4-8K	000000-017776 020000-037776	IN	IN OUT	IN IN	IN IN	IN IN	IN IN				
8-12K 12-16K	040000-057776 060000-077776		IN OUT	OUT OUT	IN IN	IN IN	IN IN			WHEN USED AS A 4K OR A NON INTER-LEAVED 8K JUMPERS ARE W8 W7	WHEN W11 IS INSTALLED IT MAKES THE MEMORY DO A DATI RE-GARDLESS OF THE STATE OF THE C00 AND C01 LINES
16-20K 20-24K	100000-117776 120000-137776		IN OUT	IN IN	OUT OUT	IN IN	IN IN				
24-28K 28-32K	140000-157776 160000-177776		IN OUT	OUT OUT	OUT OUT	IN IN	IN IN				
32-36K 36-40K	200000-217776 220000-237776		IN OUT	IN IN	IN IN	OUT OUT	IN IN				
40-44K 44-48K	240000-257776 260000-277776		IN OUT	OUT OUT	IN IN	OUT OUT	IN IN				
48-52K 52-56K	300000-317776 320000-337776		IN OUT	IN IN	OUT OUT	OUT OUT	IN IN			WHEN USED AS AN 8K INTERLEAVED (2-8K BANKS REQUIRED) JUMPERS ARE W8 W7	
56-60K 60-64K	340000-357776 360000-377776	IN	IN OUT	OUT OUT	OUT OUT	OUT OUT	IN IN				
64-68K 68-72K	400000-417776 420000-437776		IN OUT	IN IN	IN IN	IN IN	OUT OUT				
72-76K 76-80K	440000-457776 460000-477776		IN OUT	OUT OUT	IN IN	IN IN	OUT OUT				
80-84K 84-88K	500000-517776 520000-537776		IN OUT	IN IN	OUT OUT	IN IN	OUT OUT				
88-92K 92-96K	540000-557776 560000-577776		IN OUT	OUT OUT	OUT OUT	IN IN	OUT OUT				
96-100K 100-104K	600000-617776 620000-637776		IN OUT	IN IN	IN IN	OUT OUT	OUT OUT				
104-108K 108-112K	640000-657776 660000-677776		IN OUT	OUT OUT	IN IN	OUT OUT	OUT OUT				
112-116K 116-120K	700000-717776 720000-737776		IN OUT	IN IN	OUT OUT	OUT OUT	OUT OUT				
120-124K	740000-757776		IN	OUT	OUT	OUT	OUT				
DEVICE USED AS 4K MEMORY △		IN	X	X	X	X	X	IN	OUT		

NOTES:

✱1 W1 IS FOR TEST PURPOSES ONLY

△2 WHEN USED AS AN 8K BANK W5 AND W10 MUST BE INSTALLED AND W9 MUST BE OUT
WHEN USED AS A 4K BANK W10 MUST BE OUT W9 MUST BE IN AND W5 DETERMINES THE BANKS LOCATION ON THE BUS

□3 THIS MEMORY CAN ONLY BE INTERLEAVED AS 16K (TWO ADJACENT CONTIGUOUS ADDRESS SPACE BANKS) WHEN NOT INTERLEAVED (SOLID JUMPERS ON W7 AND W8) THE DEVICE SELECT IS AS SHOWN IN TABLE 1 USING A 6. WHEN THE 8K BANKS ARE INTERLEAVED W7 AND W8 MUST BE AS SHOWN IN DOTTED LINES IN TABLE 1 ALSO IN TABLE 1 AB1 NODE GOES TO THE DEVICE SELECTOR GATE CONTROLLED BY W6 THE TWO BANKS MUST HAVE W6 IN ON ONE BANK AND OUT ON THE OTHER

4 FIGURE 1 SHOWS THE PHYSICAL LOCATION OF THE JUMPERS ON THE G110 IF THE MODULE WERE LYING ON THE PRINT WITH COMPONENTS UP AND CONNECTORS TOWARD BOTTOM OF PRINT
W7 & W8 ARE AS SHOWN SCHEMATICALLY ON D CS-G110 0 1

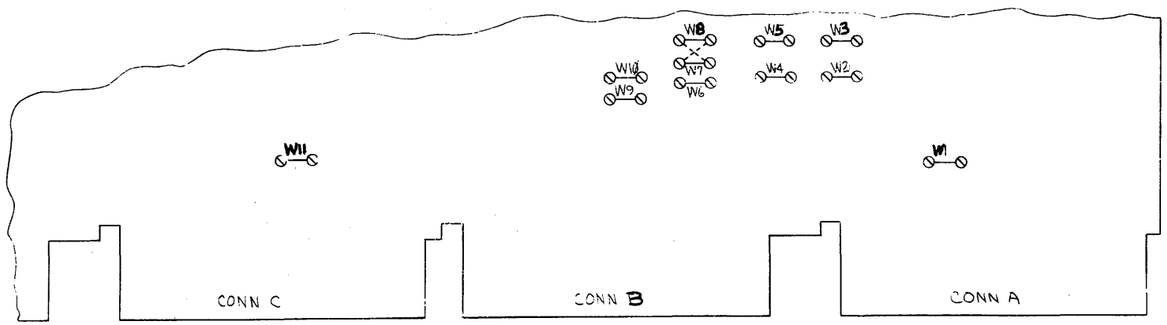

FIGURE 1
G110 JUMPER PHYSICAL LOCATION
SEE NOTE 4

REVISIONS	REV	CHANGE NO	CHK

FIRST USED ON OPTION/MODEL	QTY.	DESCRIPTION	PART NO	ITEM NO
MM11-S		PARTS LIST		

UNLESS OTHERWISE SPECIFIED DIMENSION IN INCHES. TOLERANCES
DECIMALS: .XXX ± .005, .XX ± .02, .X ± .1 — ANGLES: ± 0° 30'
REMOVE BURRS AND BREAK SHARP CORNERS SURFACE QUALITY ✓
MATERIAL
FINISH

DRN.	DATE 5/15/72	digital EQUIPMENT CORPORATION MAYNARD MASSACHUSETTS
CHK'D.	DATE 5-25-72	
ENG.	DATE 5-22-72	
PROJ. ENG.	DATE 5-22-72	
PROD.	DATE	

TITLE: BLOCK DIAGRAM (DEVICE DECODING)

NEXT HIGHER ASSY. B-DD-MM11-S-0
SCALE —
SHEET 2 OF 2

SIZE	CODE	NUMBER	REV
D	BD	MM11 S 2	

DIST.

DEC FORM NO 10811 100-A

D BD MM11-S-2

DIGITAL EQUIPMENT CORPORATION
MAYNARD, MASSACHUSETTS

PARTS LIST

MADE BY F. CARBERRY	CHECKED J. Balagh	SECTION
DATE 1/5/72	DATE 1-25-72	
ENG P. Durant	PROD R.K. Patterson	ISSUED SECT.
DATE 1/25/72	DATE 1-26-72	

ITEM NO.	DWG NO./PART NO.	DESCRIPTION	QUANTITY/VARIATION MM11-L	MM11-K
1	B-DD-H213-Ø	H213 MEMORY STACK (4K X 16)		1
2	E-CS-G231-Ø-1	MEMORY DRIVER	1	1
3	E-CS-G110-Ø-1	CONTROL & DATA LOOPS	1	1
4	B-DD-H214-Ø	H214 MEMORY STACK (8K X16)	1	

TITLE	ASSY NO.	SIZE	CODE	NUMBER	REV.	ECO NO.
MEMORY, MM11	//	A	PL	MM11-L-Ø		
	SHEET 1 OF 1	DIST.				

DEC FORM DRA 110 DEC 16-(325)-1031-N870

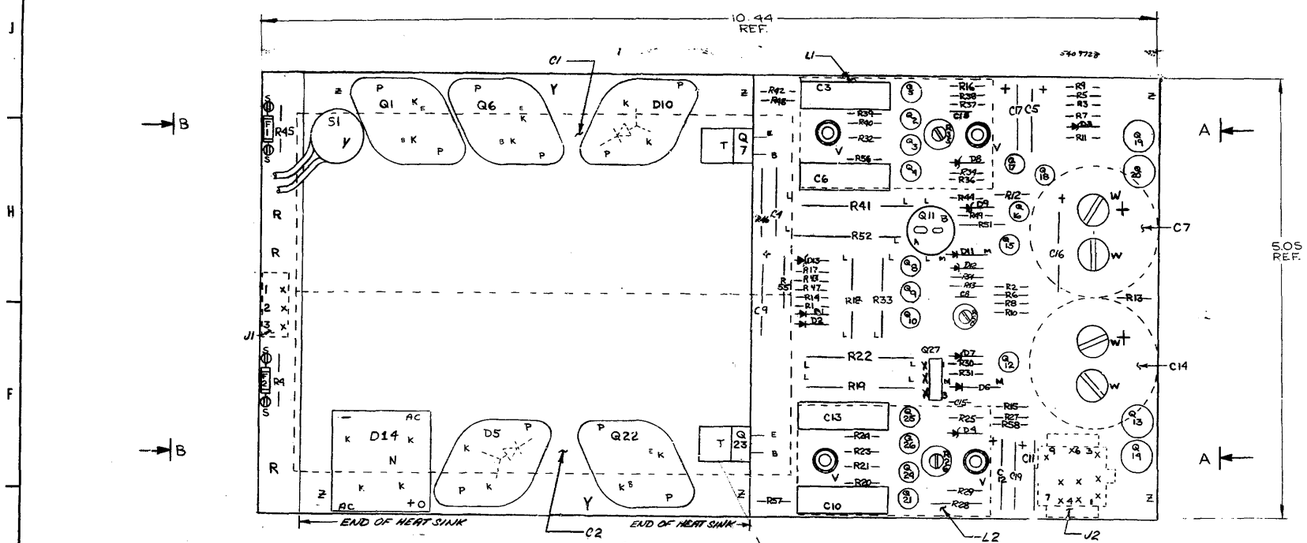

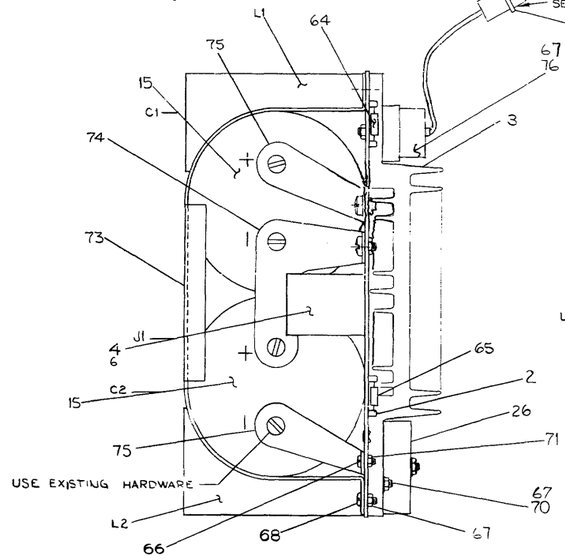

VIEW B-B

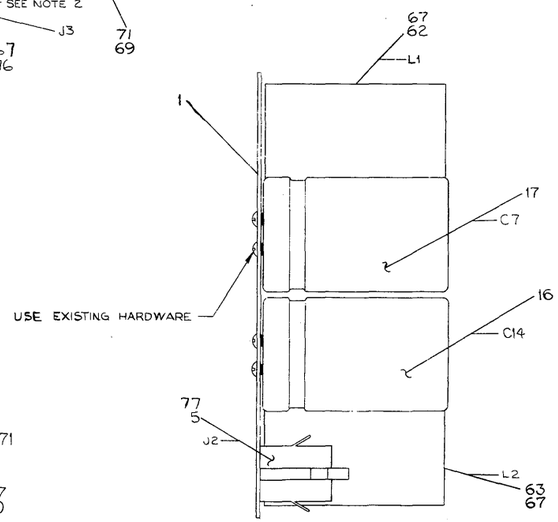

VIEW A-A

NOTES:

1. APPLY ITEM #8 (THERMAL COMPOUND) BETWEEN TRANSISTOR AND HEAT SINK FOR Q1, Q6, Q7, Q22, Q23, D5, D10, D14 & S1.
2. TRIM LEADS ON ITEM #76 (THERMOSTAT) TO (5) INCHES AND ATTACH ITEM #84 (PINS) AND ITEM #83 (HOUSING) AS SHOWN.

QTY	REF DESIGNATION	DESCRIPTION	PART NO.	ITEM NO.
				88
				87
1	Q11	XSTR G32AX13S	1510928	86
2	R9, R13	RES 470 1/4 W 5%	1300316	85
2		PINS MALE CRIMP	1209378-01	84
1	J3	MATE-N-LOCK CONNECTOR	1210822-02	83
				82
1	D12	DIODE, ZENER, 5.7 V, 2%	1111205	81
1	C12, C19	CAP 2.2 uF 35V 10% S.TANT	1002431	80
				79
2	R39, R40	RES 5.1 1/4 W 5%	1309422	78
9		PIN FEMALE	1209456	77
1	S1	THERMOSTAT SPST	1210824	76
2		CONTACT, CAPACITOR	C-MD-5309781-0-075	75
1		CONTACT, COMMON CAPACITOR	C-MD-5309779-0-074	74
1		HOLDER, CAPACITOR	C-IA-5310126-0-073	73
AR				72
5		NUT, KEPS 4-40	9008557	71
1		SCR, PHL PAN, HD 6-32-3/4 LG.	9006026-1	70
2		SCR PHL PAN HD 4-40X 1/2 LG	9006013-4	69
12		SCR. PHL HD. 6-32 X 9/16 LG	9007793-1	68
16		NUT, KEPS #6-32 X 1/4	9008185	67
3		SCR, PHL, PAN, HD 4-40 X 5/16 LG.	9006007-1	66
1	F2	FUSE 10 AMP, PICO	1210929-01	65
1	F1	FUSE 15 AMP, PICO	1210979	64
1	L2	CHOKE 100 uH 10A MMC 4445	1611031	63
1	L1	CHOKE 100 uH 20A MMC 4289	1610717	62
1	Q27	XSTR MAC 11-3	1510765	61
1	Q1	XSTR MJ2500	1511282	60
2	Q7, Q23	XSTR D45 H8/5	1510708-2	59
10	Q2,Q3,Q5,Q8,Q9 Q15,Q16,Q17,Q18,Q26	XSTR XA55	1510706	58
6	Q4,Q6,Q12,Q21,Q24,Q25	XSTR XA05	1510705	57
2	Q6, Q22	XSTR 2N3302	1510196	56
2	Q14, Q19	XSTR 2N3019	1510311	55
2	Q13, Q20	TRANSISTOR 2N1308	1500583	54
1	R41	RES .025, 7W 3%	1310709-1	53
				52
1	R22	RES .2 5W 5%	1309884	51
3	R26, R35, R50	RES 100, 1/2 W 20% 62 PR	1309150-05	50
1	R 52	RES .1 5W, 5% WW	1309872	49
1	R33	RES .39 2W 5% WW	1310868	48
1	R10	RES 7.5K 1/8W 1% MF	1305322	47
2	R25, R34	RES 383, 1/8W, 1% MF	1305125	46
6	R2, R5, R9, R11, R12, R3	RES 10K, 1/8 W, 1% MF	1305312	45
4	R6, R1, R7, R14	RES 1K, 1/8W, 1% MF	1303116	44
2	R27, R36	RES 909, 1/8 W, 1% MF	1303097	43
1	R51	RES 100, 3%, PTC	1310927	42
1	R49	RES 147, 1/8 W, 1% MF	1302874	41
				40
				39
2	R24 R47	RES 68K 1/4W, 5%	1301827	38
5	R20,R21,R30,R48,R54	RES 10 1/4 W 5%	1301317	37
4	R38,R43,R56,R57	RES. 10K 1/4 W, 5%	1300979	36
4	R28, R46, R4, R45	RES 4.7K, 1/2W, 5%	1300945	35
1	R55	RES 2.7K, 1/2W, 5%	1300925	34
1	R19	RES .06 5W 3% WW	1310876-02	33
2	R29, R37	RES 1K, 1/4W, 5%	1300305	32
3	R44, R16, R58	RES 330 1/4 W 5%	1300295	31
1	R18	RES 100, 2W, 5%	1302380	30
7	R15, R17, R23, R31, R32, R42, R53	RES 100, 1/4 W 5%	1300229	29
1	D7	DIODE IN5248B, 18V ZENER	1110766	28
2	D5, D10	DIODE 20 AMP FAST RECOVERY RECT	1110715	27
1	D14	DIODE BRIDGE RECTIFIER	1110714	26
1	D3	DIODE 5.1 V ZENER	1110525	25
2	D6, D11	DIODE IN5624	1110420	24
2	D1, D2	DIODE IN4004	1105796	23
2	D4, D8	DIODE IN753A 6.2 V ZENER	1102421	22
1	D9	DIODE AZ5 2.4 V ZENER	1101938	21
1	D13	DIODE IN748A 3.9 V ZENER	1100122	20
1	C18	CAP 680 PF, 100V, DM	1000026	19
1	C9	CAP 20 uF 60V 5% S.TANT	1010716	18
1	C7	CAP 6000 uF 10V -10+75% S.TANT	1010704	17
1	C14	CAP 3,000 uF 25V -10+75% S.TANT	1010703	16
2	C1, C2	CAP 24000 uF 50V -10%+75%	1010702	15
1	C16	CAP 22 uF 35V 20% S.TANT	1002433	14
4	C3, C6, C10, C13	CAP 1 uF 100V 10%	1011032	13
2	C8, C15	CAP .22 uF 50V	1010274	12
2	C5, C17	CAP 6.8 uF 35V 10% S.TANT	1005306	11
2	C4, C11	CAPACITOR .033 uF 100V 10% MYLAR	1000050	10
				9
AR		THERMAL COMPOUND	9008268	8
				7
3		PINS MALE	1210823-01	6
1	J2	MATE-N-LOCK CONNECTOR	1209350-09	5
1	J1	MATE-N-LOCK CONNECTOR	1209351-03	4
1		HEAT SINK	1210596	3
4		SPLIT LUG	9006735	2
1		ETCHED BOARD	5009727	1

PARTS LIST

	MODULE ECO HISTORY	B-MH-5409728-0-0
	X-Y COORDINATE HOLE LOC.	K-CO-5409728-0-0
	CIRCUIT SCHEMATIC	D-CS-5409728-01

	5409728 INTERPLANT PACKAGE	A-PI-3700065-0-0	93
	MANUFACTURING SPECIFICATION	A-SP-5409728-0-0	92
	ASSEMBLY PROCEDURE	A-SP-5409728-0-0	91
	INSPECTION PROCEDURE	A-SP-5409728-0-0	90
	MANUFACTURING TEST PROCEDURE	A-SP-5409728-0-3	89

FIRST ASSEMBLY/REEL 11/05

ECN BOARD REV J

11-8-71			
12-4-71			
12-14-71			
12-14-71			
12-21-71			

HEAT WASHER ASSY D-AD-7008731-0-0

SHEET 2/1

EQUIPMENT CORPORATION.

TITLE: REGULATOR BOARD

SIZE E | DWG. NO. 5409728-0-0 | REV. J

SCALE

IC TYPE | GND | +5V

IC PIN LOCATIONS

FROM NO	FROM PT	TO NO	TO PT

JUMPER LIST

DEC NO.	ECA NO.

DECONNECTOR CONVERSION CHART

This drawing and specifications, herein, are the property of Digital Equipment Corporation and shall not be reproduced or copied or used in whole or in part as the basis for the manufacture or sale of items without written permission.

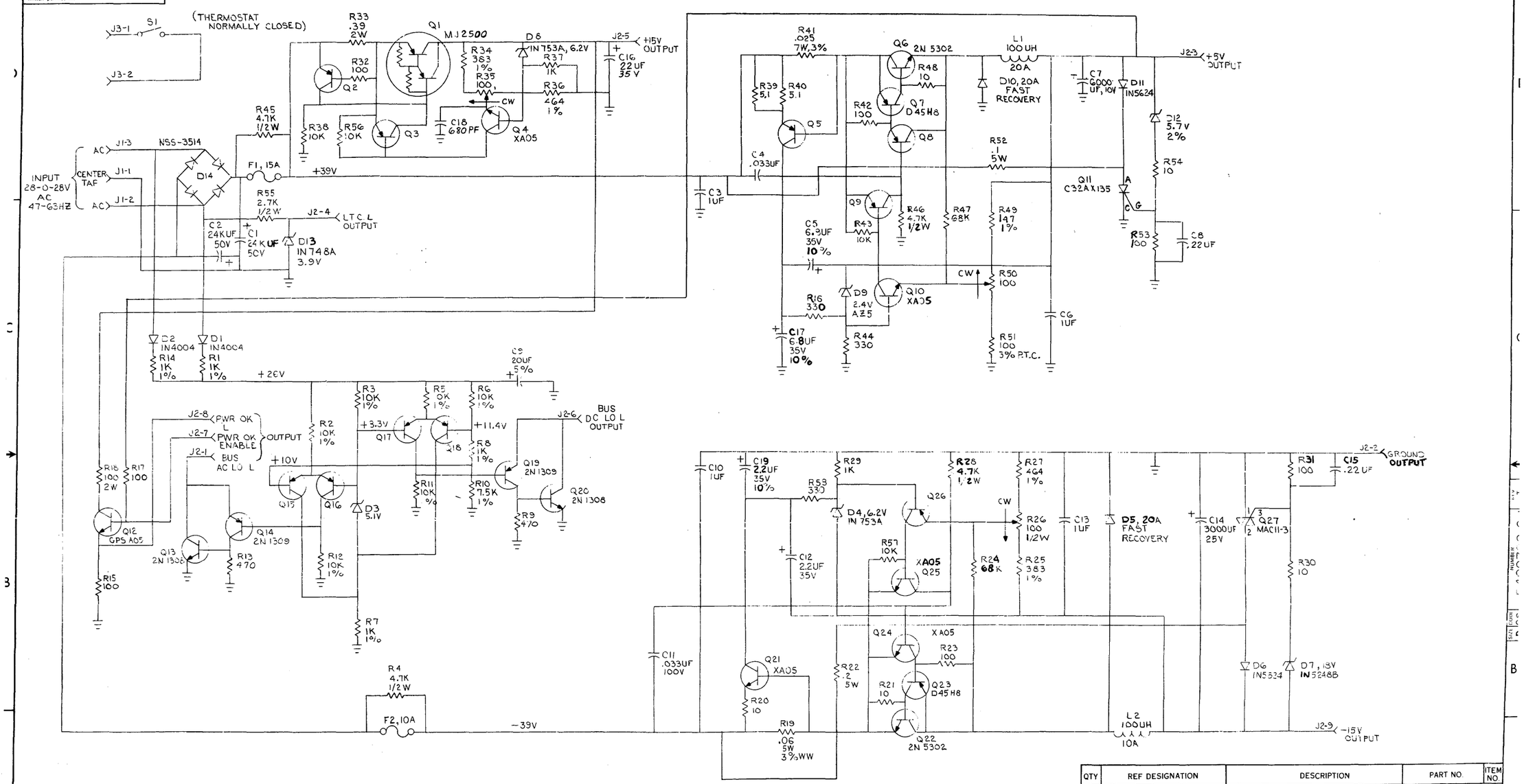

UNLESS OTHERWISE INDICATED:
1% RESISTORS ARE 1/8 W
TRANSISTORS = XA05
VOLTAGES ARE TAKEN AT NO LOAD WITH 115 VAC LINE
VOLTAGES ARE ±10% TAKEN BY A ≥ 10K/V METER

QTY	REF DESIGNATION	DESCRIPTION	PART NO.	ITEM NO.

PARTS LIST

ETCH BOARD REV E

CHK	CHANGE NO.	REV
R. WOLFF	5409728-00001	A+B
R. WOLFF	5409728-00002	C
R. WOLFF	5409728-00004	D
R. BURTON	5409728-00005	E
J. W. LAWRENCE	5409728-00006	F
R. WOLFF	5409728-00007	H
R. BURTON	5409728-00008	J
S. BLAKE	5409728-00008	J
R. WOLFF	5409728-00008	J

REVISIONS

DEC NO.	EIA NO.	DEC NO.	EIA NO.

SEMICONDUCTOR CONVERSION CHART

DRN. Roger J. Doucette DATE 12-20-71
CHK'D. P. Marc Moore DATE 12-21-71
ENG. R. Howard DATE 12-28-71
PROJ. ENG. R. Howard DATE 12-28-71
PROD. R. Pickering DATE 12/30/71
NEXT HIGHER ASSY
SCALE
SHEET 1 OF 1

digital EQUIPMENT CORPORATION MAYNARD MASSACHUSETTS

TITLE REGULATOR BOARD FOR H74C

SIZE D CODE CS NUMBER 5409728-0-1 REV. J
DIST.

DEC FORM NO DRD-135

PAGE REVISION CONTROL SHEET

SH NO.	PAGE REVISIONS	REMARKS
1	*	
2	*	
3	*	(TD)
4	*	(MD)
5	*	(SABR)
6	*	(GM)
7	*	(PVCS)
8	*	(SDM)
9	*	(CCL1)
10	*	(CCL2)
11	*	(CRD)
12	*	(CSC)

ECO NO.	
ETCH REV.	A
ENG.	
DATE	

FIRST USED ON OPTION/MODEL: GT4Ø

THIS DOCUMENT CONTAINS CONFIDENTIAL PROPRIETARY INFORMATION OF DEC. THIS INFORMATION SHALL NOT BE DISCLOSED TO PERSONS OUTSIDE THE EMPLOY OF DEC. EXCEPT BY DEC PERSONNEL SO AUTHORIZED BY DEC. AND ONLY FOR USE BY SUCH OTHER PERSONS IN THE DESIGN, PRODUCTION AND MANUFACTURE OF PRODUCTS FOR DEC.

DRN. NANCY MOORE	DATE 10-27-72	digital EQUIPMENT CORPORATION MAYNARD MASSACHUSETTS
CHK'D. NANCY MOORE	DATE	
ENG. [signature]	DATE 10-30-72	TITLE: VT 40 DISPLAY CONTROL
PROJ. ENG. H E Lavoie	DATE 10/30/72	
PROD. [signature]	DATE 11/3/72	

"THIS DRAWING AND SPECIFICATIONS, HEREIN, ARE THE PROPERTY OF DIGITAL EQUIPMENT CORPORATION AND SHALL NOT BE REPRODUCED OR COPIED OR USED IN WHOLE OR IN PART AS THE BASIS FOR THE MANUFACTURE OR SALE OF ITEMS WITHOUT WRITTEN PERMISSION.
COPYRIGHT © 1972 DIGITAL EQUIPMENT CORPORATION"

NEXT HIGHER ASSY.				
B-DD-GT4Ø-Ø	SIZE B	CODE CS	NUMBER M7Ø13—Ø—1	REV.
SCALE —				
SHEET 1 OF 12	DIST.			

This drawing and specifications, herein, are the property of Digital Equipment Corporation and shall not be reproduced or copied or used in whole or in part as the basis for the manufacture or sale of items without written permission.

COPYRIGHT © 1972 DIGITAL EQUIPMENT CORPORATION

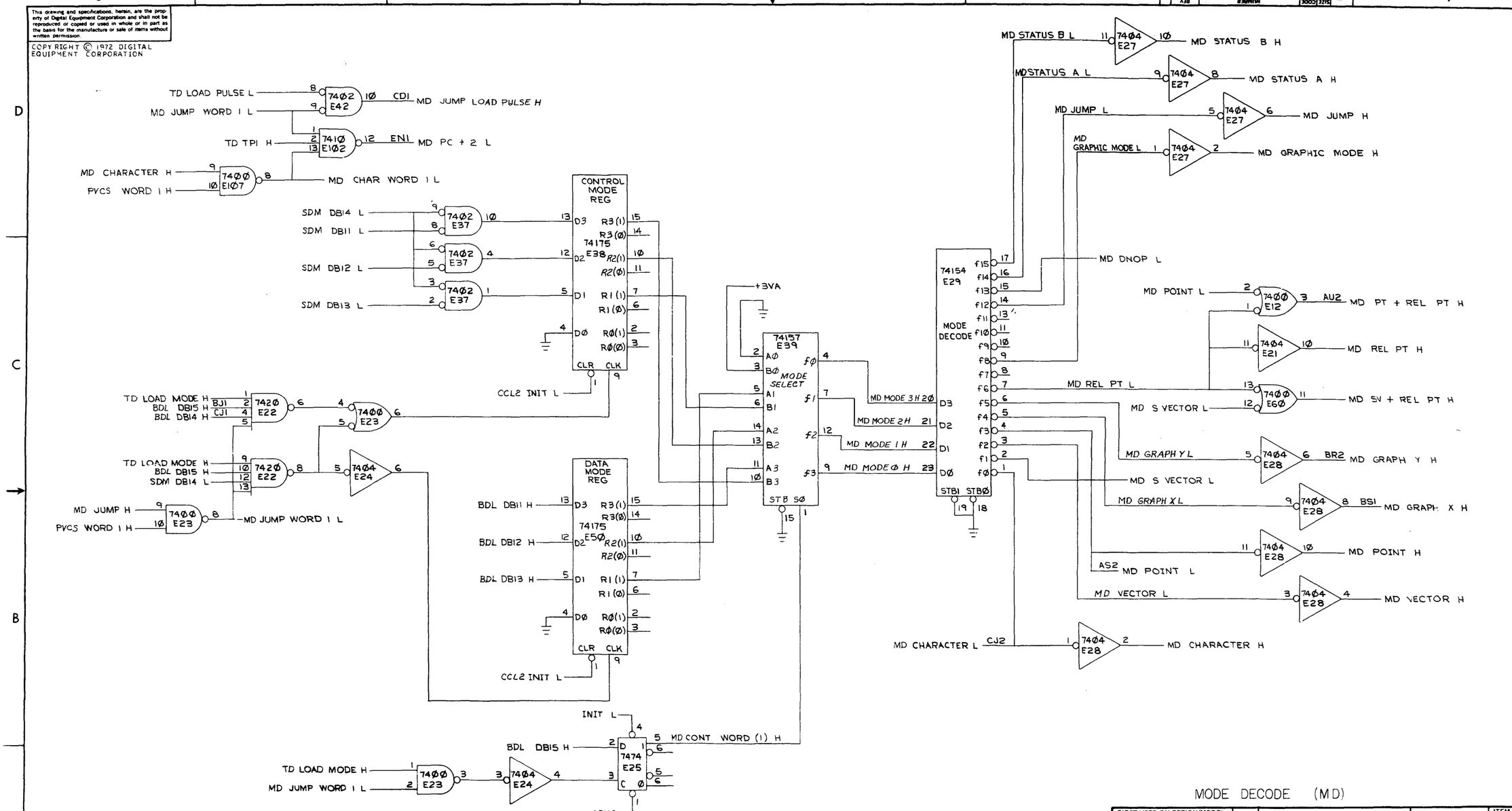

MODE DECODE (MD)

FIRST USED ON OPTION/MODEL	QTY.	DESCRIPTION	PART NO.	ITEM NO.
		PARTS LIST		

UNLESS OTHERWISE SPECIFIED DIMENSION IN INCHES. TOLERANCES

DECIMALS	ANGLES
.XXX = .005	
.XX = .02	
.X = .1	

REMOVE BURRS AND BREAK SHARP CORNERS SURFACE QUALITY ✓

MATERIAL

FINISH

DRN. R E Hellen	DATE 9/6/72	digital EQUIPMENT CORPORATION MAYNARD MASSACHUSETTS
CHK'D. NANCY MOORE	DATE 10-30-72	
ENG.	DATE	TITLE VT40 DISPLAY CONTROL (MD)
PROJ. ENG. H E Lavoie	DATE 11/3/72	
PROD.	DATE 11/3/72	
NEXT HIGHER ASSY.		
SCALE		SIZE D CODE CS NUMBER M7013-0-1 REV
SHEET 4 OF		DIST.

BRUNING 40-522 15840 REVISIONS CHK CHANGE NO REV

DEC FORM NO ORD 102-B

This drawing and specifications, herein, are the property of Digital Equipment Corporation and shall not be reproduced or copied or used in whole or in part as the basis for the manufacture or sale of items without written permission.

COPYRIGHT © 1972 DIGITAL EQUIPMENT CORPORATION

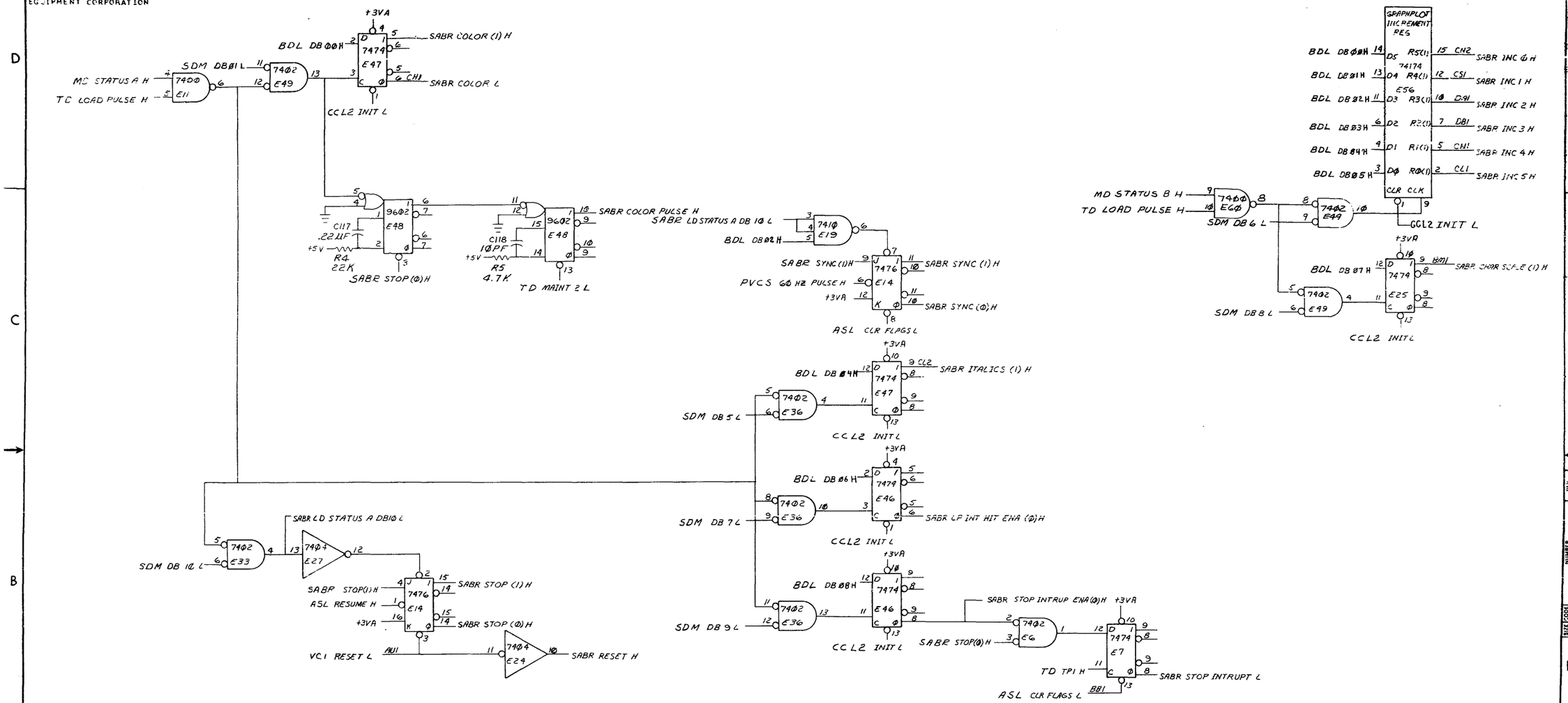

STATUS A & B REG (SABR)

FIRST USED ON OPTION/MODEL	QTY.	DESCRIPTION	PART NO.	ITEM NO.
		PARTS LIST		

UNLESS OTHERWISE SPECIFIED DIMENSION IN INCHES. TOLERANCES

DECIMALS	ANGLES
.XXX = .005 .XX = .02 .X = .1	±0° 30'

REMOVE BURRS AND BREAK SHARP CORNERS SURFACE QUALITY ✓

MATERIAL

FINISH

		DATE
DRN.	B Manchester	9-6-72
CHK'D.	NANCY MOORE	10-30-72
ENG.	J Tomony	10-30-72
PROJ. ENG.	H.E. Lavoie	11/30/72
PROD.	F. M. Cantry	11/3/72

NEXT HIGHER ASSY.

SCALE

SHEET 5 OF

digital EQUIPMENT CORPORATION MAYNARD MASSACHUSETTS

TITLE VT40 DISPLAY CONTROL (SABR)

SIZE	CODE	NUMBER	REV.
D	CS	M7013-0-1	

DIST.

REVISIONS: REV | CHANGE NO | CHK

BRUNING 40-522 15840

DEC FORM NO DRD 102-B

This drawing and specifications, herein, are the property of Digital Equipment Corporation and shall not be reproduced or copied or used in whole or in part as the basis for the manufacture or sale of items without written permission.

COPYRIGHT © 1972 DIGITAL EQUIPMENT CORPORATION

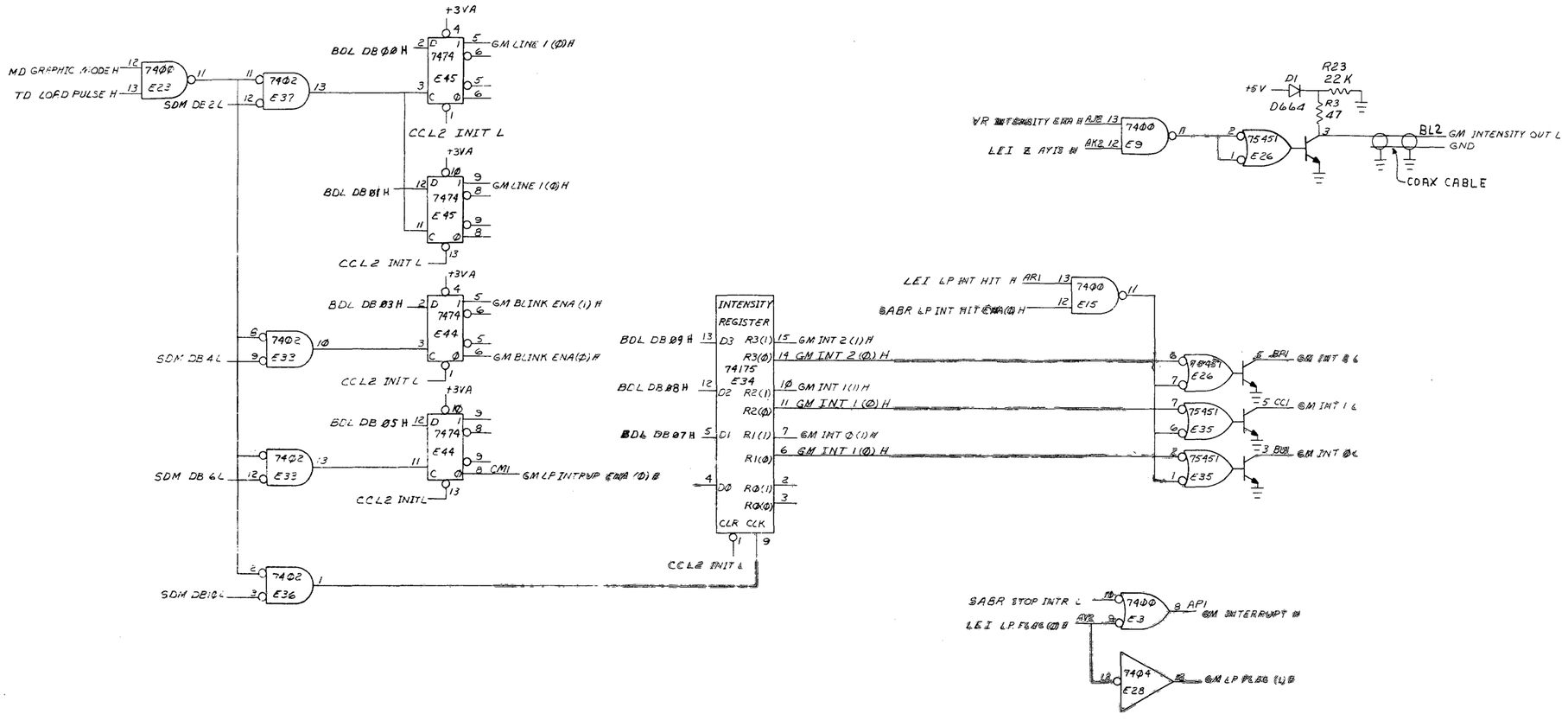

GRAPHIC MODE (GM)

FIRST USED ON OPTION/MODEL	QTY.	DESCRIPTION	PART NO.	ITEM NO.
		PARTS LIST		

UNLESS OTHERWISE SPECIFIED DIMENSION IN INCHES TOLERANCES

DECIMALS: .XXX = .005, .XX = .02, .X = 1

ANGLES

REMOVE BURRS AND BREAK SHARP CORNERS SURFACE QUALITY ✓

MATERIAL

FINISH

DRN. [signature] DATE 9-2-72

CHK'D. NANCY MOORE DATE 10-30-72

ENG. [signature] DATE

PROJ. ENG. [signature] DATE 10/30/72

PROD. [signature] DATE 11/1/72

NEXT HIGHER ASSY.

SCALE

SHEET 6 OF

digital EQUIPMENT CORPORATION MAYNARD MASSACHUSETTS

TITLE: V140 DISPLAY CONTROL (GM)

SIZE D CODE CS NUMBER M7013-0-1 REV

DIST.

DRAWING 40 522 15640

REVISION | CHANGE NO. | REV | CHK

DEC FORM NO ORD 102-B

This drawing and specifications, herein, are the property of Digital Equipment Corporation and shall not be reproduced or copied or used in whole or in part as the basis for the manufacture or sale of items without written permission.

COPYRIGHT © 1972 DIGITAL EQUIPMENT CORPORATION

PVCS LC1 H, PVCS LC2 H, PVCS LC3 L — 7410 E19 — PVCS LC4 L

LINE DECODER TABLE

S1	S0	F0
L	L	A0
L	H	B0
H	L	C0
H	H	D0

7400 E11 — PVCS LC3 H, PVCS LC4 H, +3VB — 74153 E19 LINE DECODER (D0, C0, B0, A0; S1, S0, STB0; F0)

GM LINE 1 (1) H, GM LINE 0 (1) H, PVCS VEC INT (0) H

7404 E21 — PVCS PNTS VEC INT (0) H

BS1, MD GRAPH X H — 7402 E40 — BR2, MD GRAPH Y H

AS1, CSC CR·ST L, MD CHARACTER H — 7400 E11

7420 E13 — CM BLINK ENA (0) H, GM BLINK ENA (1) H — 7400 E12, 7410 E30 — PVCS BLINK (1) H — BA1 — PVCS GRAPHICS L

7400 E12 — 8 AV1 — PVCS INTENSITY LEVEL H

MD VECTOR L, PVCS WORD 1 H — 7402 E41 — PVCS VEC WORD 0 H, TD LOAD PULSE L — 7402 E42 — 4 CE2 — PVCS LD △ X H

MD SV+REL PT H — 7402 E41

MD POINT L, PVCS WORD 1 H — 7402 E41 — PVCS POINT WORD 0 H

BS2 — 7402 E41 — BS1, MD GRAPH X H — 7402 E42 — TD LOAD PULSE L — 7404 E21 — 2 AD1 — PVCS LOAD X L

7404 E63 — CSC CHAR GO L — 7400 E11 — 8 AT2 — PVCS VEC + CHAR GO H

TD TP 2 H — 7400 E12

MD CHARACTER H, TD TP 2 H — 7400 E107 — PVCS CHAR GEN GO L — 7404 E71 — 10 — PVCS CHAR GEN GO H

MD VECTOR L, PVCS WORD 0 H — 7402 E53 — PVCS VEC WORD 1 H, MD SV+REL PT H — 7402 E53 — TD LOAD PULSE L — 7402 E53 — 13 AB1 — PVCS LD △ Y H

PVCS VEC WORD 1 H, BDL DB13 H — 7400 E9 (CK1) — MD SV+REL PT H, BDL DB06 H — 7400 E9 (BV2) — PVCS LD △ Y H

+3VB — 7474 E8 — 5 AC1 — PVCS △ Y L; ABI — 5 AM1 — PVCS △ Y H

PVCS INIT OP DONE L

+5V — R7 4.7K

PWR SUPPLY L, CLK INT H — AA1 — R21 560Ω, R22 560Ω, C125 .22 μF — 7413 E10

C120 100PF — 74123 E59 70NS — PVCS G0 HZ PULSE H — PVCS G0 HZ PULSE L

+3VB — CJ1, BDL DB13 H — 7474 E72 — CSC BS H — 7402 E113 — 13 FV2 — PVCS X UP ENA H

CC2, PVCS LD △ X H — DM2 — PVCS △ X H

PVCS INIT OP DONE L

PVCS BLINK (0) H — +3VB — 7474 E52 — PVCS BLINK (1) H — PVCS BLINK (0) H

7493 E20 DIVIDE BY FOUR REG (R3(1), R2(1), R1(1), R0(1), CLR, CLKBC, CLK0) — PVCS STROBE BELL L

CCL2 INIT L

+3VB — 7474 E8 — BDL DB14 H — PVCS VEC INT (1) H; PVCS LD △ X H — PVCS VEC INT (0) H

PVCS INIT OP DONE L

+3VB — CJ1, BDL DB14 H — 7474 E7 — PVCS PNTS VEC INT (1) H; PVCS PNTS VEC INT (0) H

MD REL PT H, PVCS POINT WORD 0 H — 7402 E6 — TD LOAD PULSE L

BCL INIT H, VC2 VEC GEN OP DONE H — CR1, AF1 — 7402 E6 — PVCS INIT OP DONE L

AF1, MD CHARACTER H, VC2 VEC GEN OP DONE H — 7400 E15 — PVCS WORD 1 H

MD VECTOR L, MD JUMP L, MD POINT L — 7410 E19 (AS2) — TD TP 2 H — 7400 E15 — 7400 E15 — PVCS WORD 0 H

+3VB — 7473 E16 — MD CLR WORD L

CRY BRW — 74193 E17 LINE COUNT REGISTER (D3, D2, D1, D0; R3(1), R2(1), R1(1), R0(1); CLR LD CUP CDN) — +3VB

7404 E21 — PVCS LC4 H — PVCS LC 4 L

7404 E21 — PVCS LC3 H — PVCS LC3 L

7404 E21 — PVCS LC2 H — PVCS LC2 L

7404 E21 — PVCS LC1 H — PVCS LC1 L

ANI — LEI INTENSITY MOVE H

+3VB — CF2 — 7473 E16 — PCC DIS. CLOCK H

PR Y8 H, EV2 11 — 7410 E30 — EP2 9, PR Y9 H — 7404 E71 — 12 DC1 — PVCS Y8·Y9 H

MD POINT H, PVCS WORD 1 H — 7400 E31 — MD GRAPH Y L, MD GRAPH X L — 7410 E30 — TD TP 2 H — 7400 E31 — 7404 E21 — 12 AM2 — PVCS POINT + GRAPH GO H

MD GRAPH Y L — 7400 E31 — TD LOAD PULSE H, AN2 — 7400 E31 — 8 BP2 — PVCS LOAD Y L

POINT, VECTOR, CHARACTER, START (PVCS)

FIRST USED ON OPTION/MODEL	QTY.	DESCRIPTION	PART NO.	ITEM NO.
		PARTS LIST		

UNLESS OTHERWISE SPECIFIED DIMENSION IN INCHES. TOLERANCES

DECIMALS	ANGLES
.XXX = .005	±0° 30'
.XX = .02	
.X = .1	

REMOVE BURRS AND BREAK SHARP CORNERS SURFACE QUALITY ✓

MATERIAL

FINISH

	NAME	DATE
DRN	G. Hamilton	9-8-72
CHK'D.	NANCY MORE	10-30-72
ENG.	J. Murray	10-30-72
PROJ. ENG.	Alice Eviacee	10/24/72
PROD.	Paul Gately	11/1/72

NEXT HIGHER ASSY.

SCALE

SHEET 7 OF

digital EQUIPMENT CORPORATION MAYNARD MASSACHUSETTS

TITLE: VT40 DISPLAY CONTROL (PVCS)

SIZE	CODE	NUMBER	REV.
D	CS	M7013-0-1	A

DIST.

REV	REVISIONS	CHK
A	CHANGE NO.	

BRUNING 40-522 15940

DEC FORM NO DRD 102-B

This drawing and specifications, herein, are the property of Digital Equipment Corporation and shall not be reproduced or copied or used in whole or in part as the basis for the manufacture or sale of items without written permission.

NOTES:

1. UNLESS OTHERWISE SPECIFIED
   RESISTANCE IS IN OHMS
   CAPACITANCE IS IN PICOFARADS

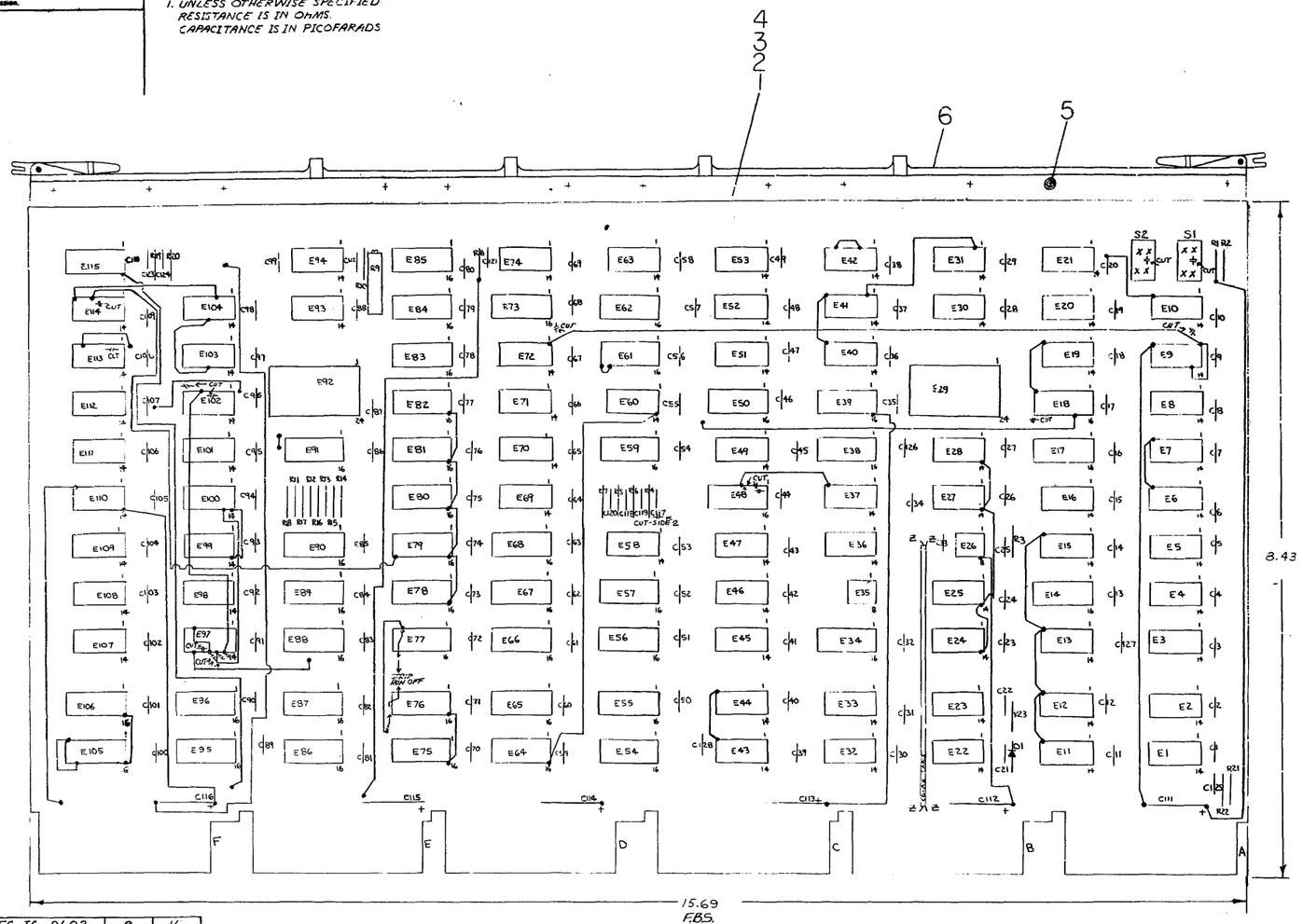

DEC IC 9602	8	16
IM 5603	8	16
DEC IC 74155	8	16
DEC IC 74174	8	16
DEC IC 75451	4	8
DEC IC 7493	10	5
DEC IC 7476	13	5
DEC IC 7473	11	4
DEC IC 7442	8	16
DEC IC 74194	8	16
DEC IC 74193	8	16
DEC IC 74175	8	16
DEC IC 74157	8	16
DEC IC 7445	12	24
DEC IC 74153	8	16
DEC IC 74123	8	16
IC TYPE	GND	+ 5V

GND AND 5V ARE USUALLY PIN 7 AND 14
RESPECTIVELY EXCEPTIONS ARE STATED ABOVE

IC PIN LOCATIONS

AA2, BA2, CA2, DA2, EA2, FA2
AC2, AT1, BC2, BT1, CC2, CT1, DC2, DT1, EC2, ET1, FC2, FT1

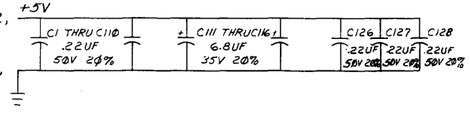

QTY	REF DESIGNATION	DESCRIPTION	PART NO.	ITEM NO.
1		ETCHED CIRCUIT BOARD	50:0146	1
REF		X/Y COORDINATE HOLE LOCATION	K-GO-M7013-0-4	2
REF		ASSY/DRILLING HOLE LAYOUT	D-AH-M7013-0-5	3
REF		MODULE ECO HISTORY	B-MH-M7013-0-6	4
12		EYELET	9006732	5
1		HANDLE	1210711-2	6
3	C118, C120, C124	CAP 10PF 100V 5%	10 00006	7
2	C121, C123	CAP 100PF 100V 5%	10 00016	8
1	C119	CAP 330PF 100V 5%	10 00023	9
1	C122	CAP 470PF 100V 5%	10 00024	10
5	C111 THRU C116	CAP 6.8 MFD 35V 20% TANT	10 00067	11
115	C1 THRU C110, C125, C126, C127, C128, C117	CAP .22UF 50V 20%	10 00274	12
1	D1	DIODE D664	11 00114	13
10	E7, E8, E25, E44, E45, E46, E47, E52, E58, E72	I.C. DEC 7474	19 05547	14
14	E3, E5, E9, E11, E12, E15, E23, E31 E80, E99, E93, E107, E114, E109,	I.C. DEC 7400	19 05575	15
4	E2, E19, E30, E102	I.C. DEC 7410	19 05576	16
2	E13, E22	I.C. DEC 7420	19 05577	17
3	E1, E4, E70	I.C. DEC 7430	19 05578	18
2	E14, E73	I.C. DEC 7476	19 05585	19
6	E16, E51, E103, E104, E111 E112	I.C. DEC 7473	19 05587	20
14	E6, E33, E36, E37, E40, E41, E42, E49, E53, E100, E97, E101, E98, E113	I.C. DEC 7402	19 09004	21
1	E20	I.C. DEC 7493	19 09054	22
10	E21, E24, E27, E28, E32, E43, E63, E69, E71 E110	I.C. DEC 7404	19 09686	23
2	E29, E92	I.C. DEC 74154	19 09701	24
9	E18, E75, E76, E86, E87, E95, E96, E105, E106	I.C. DEC 74153	19 09937	25
1	E10	I.C. DEC 7413	19 09989	26
4	E17, E61, E83, E89	I.C. DEC 74193	19 10018	27
3	E84, E85, E88	I.C. DEC 7442	19 10046	28
1	E108	I.C. DEC 7437	19 10091	29
2	E74, E94	I.C. DEC 74121	19 10230	20
2	E59, E115	I.C. DEC 74123	19 10436	31
2	E90 E91	I.C. DEC 74194	19 10623	32
3	E34, E38, E50	I.C. DEC 74175	19 10651	33
3	E56, E57, E66	I.C. DEC 74174	19 10652	34
7	E39, E54, E55, E64, E65, E67, E68	I.C. DEC 74157	19 10655	35
1	E62	I.C. DEC 74155	19 10656	36
2	E26, E35	I.C. DEC 75451	19 11036	37
1	E48	I.C. 9602	19 10951	38
1	E77	I.C. IM 5603 OR 74187	23009A2	39
1	E78	I.C. IM 5603 OR 74187	23009A2	40
1	E79	I.C. IM 5603 OR 74187	23010A2	41
1	E80	I.C. IM 5603 OR 74187	23012A2	42
1	E81	I.C. IM 5603 OR 74187	23011A2	43
1	E82	I.C. IM 5603 OR 74187	23007A2	44
1	R3	RES 47 ¼W 5%	13 00202	45
10	R1, R2, R11 THRU R18	RES 1K ¼W 5%	13 00365	46
3	R5, R6, R7	RES 4.7K ¼W 5%	13 00447	47
2	R4, R23	RES 22K ¼W 5%	13 01808	48
2	R19, R20	RES 5.6K ¼W 5%	13 01874	49
2	R21, R22	RES 560 ¼W 5%	1301890	50
2	R8, R10	RES 3K 1/8 W 1%	13 02676	51
1	R9	RES POT 2K ¾W 10% 76PR	13 09143-08	52
2	S1, S2	SWITCH	12 09698	53
1		COAX CABLE RG174U 4" LG	9107530	54

PARTS LIST

FIRST USED ON OPTION MODEL	ETCH BOARD REV
GT40	

REV	CHANGE NO	CHK	DEC NO.	EIA NO.	DEC NO.	EIA NO.
			D664	1N3606		

SEMICONDUCTOR CONVERSION CHART

DRN		DATE 9-16-72
CHK'D.	HARRY HOOKE	DATE 10-30-72
ENG.		DATE 10/31/72
PROJ. ENG.	25W H.E. LAVOIE	DATE 11/3/72
PROD.		DATE 11/3/72
NEXT HIGHER ASSY		
SCALE		
SHEET 2 OF		

digital EQUIPMENT CORPORATION MAYNARD MASSACHUSETTS

TITLE: VT40 DISPLAY CONTROL

SIZE	CODE	NUMBER	REV.
D	CS	M7013-0-1	

DIST.

BRUNING 40-522 16699
DEC FORM NO

This drawing and specifications, herein, are the property of Digital Equipment Corporation and shall not be reproduced or copied or used in whole or in part as the basis for the manufacture or sale of items without written permission.

COPYRIGHT © 1972 DIGITAL EQUIPMENT CORPORATION

MD STATUS A H
SABR STOP (Ø) H
SABR SYNC (Ø) H
SABR CHANGE (Ø) H
7420 E13

PVCS POINT WORD Ø H
PVCS VEC WORD Ø H
7402 E33

MD JUMP L
+3V A
MD GRAPHIC MODE L
MD DNOP L
MD STATUS B L
+3V A
7430 E1

TD TP 2 H
TD MAINT 2 L
7410 E2

7430 E4
TD NPR REQ (1) H

MD CHAR WORD 1 L
MD CHARACTER H
7400 E3

VC2 VEC GEN OP DONE H AF2
TD MAINT 2 L
7410 E2

+5V
R1 1K
S1 N.O.

ASL START H AH1
7400 E3

SABR STOP (1) H
ASL RESUME H AL2
7400 E5

+5V
R2 1K
S2 N.O.
TD MAINT 2 L
7404 E24

PVCS 60 HZ PULSE H
SABR SYNC (1) H
7400 E5

MD STATUS A H
SABR COLOR PULSE H
7400 E5

BCL REQ CLR L AJ1
7400 E3
AE1 TD NPR REQ (Φ) H

VC2 VEC GEN OP DONE H
MD CHARACTER H
PVCS WORD Ø H
7410 E2
7404 E71
TD RESTART H
TD RESTART L

CRY BRW
D3 D2 D1 D0
74193 E61 TIME CNT UP
R3(1) R2(1) R1(1) R0(1)
+3V A
C R LD CUP CDN

TD RESTART L
SDM DATA READY L
VC1 RESET L
7400 E60
+3V A

PCC DIS CLOCK H CF2
7400 E60
TD SYNC UP H
+3V A
7474 E52
7473 E51
TD TIME ON H

BCL DATA READY H BR1
TD RESTART H
7402 E40

SABR RESET H
TD TP 2 H
7402 E40

VC1 RESET L

7404 E63
STBB STBA
74155 E62
DB DA S1 SØ
FB3 FB2 FB1 FBØ
FA3 FA2 FA1 FAØ

TD TP2 L → TD TP2 H
TD TP1 L → TD TP1 H
TD LOAD PULSE L → AN2 TD LOAD PULSE H
TD LOAD MODE L → TD LOAD MODE H

MODE TIME TABLE

INPUTS S1	INPUTS SØ	DA	OUTPUTS (L)
L	L	H	FAØ
L	H	H	FA1
H	L	H	FA2
H	H	H	FA3

TIMING DECODER (TD)

FIRST USED ON OPTION/MODEL	QTY.	DESCRIPTION	PART NO.	ITEM NO.
		PARTS LIST		

UNLESS OTHERWISE SPECIFIED DIMENSION IN INCHES. TOLERANCES
DECIMALS .XXX = .005 .XX = .02 .X = .1
ANGLES ±0° 30'
REMOVE BURRS AND BREAK SHARP CORNERS SURFACE QUALITY ✓
MATERIAL
FINISH

DRN. [illegible] DATE 9/5/72
CHK'D. KENNY MOORE DATE 10-30-72
ENG. [illegible] DATE 10-30-72
PROJ. ENG. H. S. Lawson DATE 10/30/72
PROD. [illegible] DATE 11/3/72
NEXT HIGHER ASSY.
SCALE
SHEET 3 OF

digital EQUIPMENT CORPORATION MAYNARD MASSACHUSETTS

TITLE
VT40 DISPLAY CONTROL (TD)

SIZE D | CODE CS | NUMBER M7013-0-1 | REV
DIST

REVISIONS
REV | CHANGE NO | CHK

BRUNING 40-522 15840
DEC FORM NO DRD 102-B

This drawing and specifications, herein, are the property of Digital Equipment Corporation and shall not be reproduced or copied or used in whole or in part as the basis for the manufacture or sale of items without written permission.

COPYRIGHT © 1972 DIGITAL EQUIPMENT CORPORATION

BCL DATA READY H — 74Ø4 E24 — SDM DATA READY L

BDL DBØ1 H — 74Ø4 E32 — SDM DB1 L

BDL DBØ2 H — 74Ø4 E32 — SDM DB2 L

BDL DBØ4 H — 74Ø4 E32 — SDM DB4 L

BDL DBØ5 H — 74Ø4 E32 — SDM DB5 L

BDL DBØ6 H — 74Ø4 E32 — SDM DB6 L

BDL DBØ7 H — 74Ø4 E32 — SDM DB7L

BDL DB05 H — 74Ø4 E93 — SDM DB9L

BDL DB10 H — 74Ø4 E93 — SDM DB10L

BDL DB11 H — 7404 E93 — SDM DB11L

BDL DB12 H — 7404 E93 — SDM DB12L

BDL DB13 H — 7404 E93 — SDM DB13L

BDL DB14 H — 7404 E93 — SDM DB14L

BDL DBØ8 H — 7404 E25 — SDM DB8L

CCLI B5 H, SABR INC 4 H, MD MODE 3 H, PCC PC14 H, CCLI BG H, SABR INC 5 H, SABR STOP(1) H, PCC PC15 H — 74153 E87 — 9 EH2 SDM STATUS 14 H; 7 EGL SDM STATUS 15 H

CCLI B1 H, SABR INCØ H, GM INT2(1) H, PCC PC1Ø H, CCLI B2 H, SABR INC 1 H, MD MODEØ H, PCC PC11 H — 74153 E75 — 9 GV2 SDM STATUS 1Ø H; 7 DT2 SDM STATUS 11 H

PR Y6 H, PR X6 H, CSC SHIFT H, PCC PC6 H, PR Y7 H, PR X7 H, LEI CP FLAG(1) H, PCC PC 7 H — 74153 E95 — 9 FEI SDM STATUS Ø6 H; 7 FHI SDM STATUS Ø7 H

PR Y2 H, PR X2 H, SABR COLOR(1) H, PCC PC 2 H, PR Y3 H, PR X3 H, GM BLINK ENA(1) H, PCC PC 3 H — 74153 E1Ø6 — 9 FR2 SDM STATUS Ø2 H; 7 FS1 SDM STATUS Ø3 H

CCLI B3 H, SABR INC 2 H, MD MODE1 H, PCC PC 12 H, CCLI B4 H, SABR INC 3 H, MD MODE2 H, PCC PC13 H — 74153 E76 — 9 DVI SDM STATUS 12 H; 7 DS2 SDM STATUS 13 H

PR Y8 H, PR X8 H, GM INTØ(1) H, PCC PC8 H, PR Y9 H, PR X9 H, GM INT1(1) H, PCC PC 9 H — 74153 E36 — 9 FE2 SDM STATUS ØB H; 7 FC1 SDM STATUS Ø9 H

PR Y4 H, PR X4 H, SABR ITALICS(1) H, PCC PC 4 H, PR Y5 H, PR X5 H, LEI EDGE H, PCC PC 5 H — 74153 E86 — 9 EL2 SDM STATUS Ø4 H; 7 EMI SDM STATUS Ø5 H

PR YØ H, PR XØ H, GM LINEØ(1) H, PR Y1 H, PR X1 H, GM LINE 1(1) H, PCC PC 1 H — 74153 E1Ø5 — 9 FN1 SDM STATUS ØØ H; 7 FP2 SDM STATUS Ø1 H

BDL DE Ø6 H, BDL DE Ø7 H, BDL DE Ø8 H, BDL DE Ø9 H — 74157 E64 — 9 DK2 SDM △ X6 H; 12 DJ1 SDM △ X7 H; 7 DL1 SDM △ X8 H; 4 DH1 SDM △ X9 H

BDL DB Ø9 H, BDL DB Ø2 H, BDL DB 1Ø H, BDL DB Ø3 H, BDL DB 11 H, BDL DB Ø4 H, BDL DB 12 H, BDL DB Ø5 H — 74157 E54 — 9 CV2 SDM △ X2 H; 12 CS2 SDM △ X3 H; 7 CV1 SDM △ X4 H; 4 CU1 SDM △ X5 H

BDL DB ØØ H, BDL DB Ø1 H, BDL DB Ø9 H, BDL DB Ø7 H, BDL DB Ø5 H, BDL DB Ø1 H — 74157 E65 — 9 DM1 SDM △ Y8 H; 12 DJ2 SDM △ Y9 H; 7 DK2 SDM △ XØ H; 4 DH2 SDM △ X1 H

BDL DB Ø4 H, BDL DB Ø4 H, BDL DB Ø5 H, BDL DB Ø5 H, BDL DB Ø6 H, BDL DB Ø7 H — 74157 E55 — 9 CU2 SDM △ Y4 H; 12 CR2 SDM △ Y5 H; 7 CT2 SDM △ Y6 H; 4 CP2 SDM △ Y7 H

MD SV + RELPT H, MD VECTOR H — 7402 E40 — SDM S VEC + VEC L

SDM S VEC + VEC L, MD SV + REL PT H

ASL AØ2 H, ASL AØ1 H

STATUS REG. TABLE (74153)

S1	SØ	SELECT
L	L	A
L	H	B
H	L	C
H	H	D

STATUS & DELTA MUX (SDM)

FIRST USED ON OPTION/MODEL	QTY.	DESCRIPTION	PART NO.	ITEM NO.
		PARTS LIST		

UNLESS OTHERWISE SPECIFIED DIMENSION IN INCHES. TOLERANCES — DECIMALS .XXX = .ØØØ, .XX = .Ø2, X = .1 — ANGLES ±Ø° Ø' Ø"

REMOVE BURRS AND BREAK SHARP CORNERS SURFACE QUALITY ✓

MATERIAL —

FINISH —

	NAME	DATE
DRN	B Manchester	9-7-72
CHK'D	MARCY MOORE	10-30-72
ENG	[illegible]	DATE
PROJ. ENG.	H C Savoie	11/30/72
PROD	A MacCenty	DATE 11/7/72

NEXT HIGHER ASSY. —

SCALE —

SHEET ● OF

digital EQUIPMENT CORPORATION MAYNARD MASSACHUSETTS

TITLE: V14Ø DISPLAY CONTROL (SDM)

SIZE D | CODE CS | NUMBER M7013-Ø-1 | REV

DIST

REV	REVISION / CHANGE No.	CHK
	ECO # 3844 NO 3RD RELEASE	

This drawing and specifications herein, are the property of Digital Equipment Corporation and shall not be reproduced or copied or used in whole or in part as the basis for the manufacture or sale of items without written permission.
COPYRIGHT © 1972 DIGITAL EQUIPMENT CORPORATION

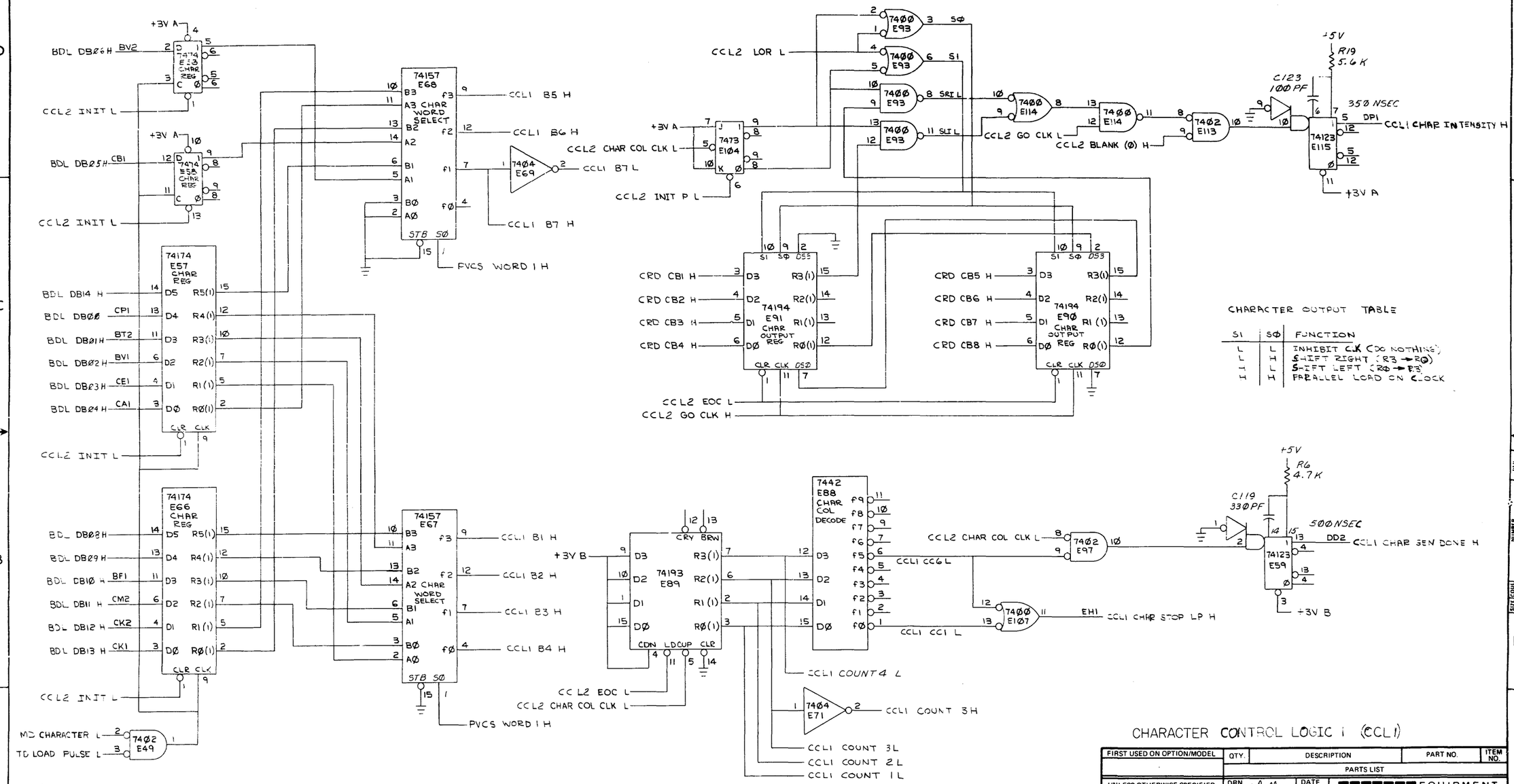

CHARACTER OUTPUT TABLE

S1	SØ	FUNCTION
L	L	INHIBIT CLK (DO NOTHING)
L	H	SHIFT RIGHT (R3 → RØ)
H	L	SHIFT LEFT (RØ → R3)
H	H	PARALLEL LOAD ON CLOCK

CHARACTER CONTROL LOGIC 1 (CCL1)

FIRST USED ON OPTION/MODEL	QTY.	DESCRIPTION	PART NO.	ITEM NO.
		PARTS LIST		

UNLESS OTHERWISE SPECIFIED DIMENSION IN INCHES. TOLERANCES
DECIMALS .XXX ± .005 .XX ± .02 .X ± .1
ANGLES ± 0° 30'
REMOVE BURRS AND BREAK SHARP CORNERS SURFACE QUALITY ✓
MATERIAL
FINISH

DRN. R E Thellen DATE 9/14/72
CHK'D. NANCY MOORE DATE 10-30-72
ENG. J Tunney DATE 10-30-72
PROJ. ENG. H E Lawrence DATE 10/30/72
PROD. P McCarthy DATE 11/3/72
NEXT HIGHER ASSY.
SCALE
SHEET 9 OF

digital EQUIPMENT CORPORATION MAYNARD MASSACHUSETTS

TITLE VT4Ø DISPLAY CONTROL (CCL1)

SIZE D CODE CS NUMBER M7Ø13-Ø-1 REV
DIST.

REVISIONS CHANGE NO REV CHK

BRUNING 40-522 15840
DEC FORM NO DRD 102-B

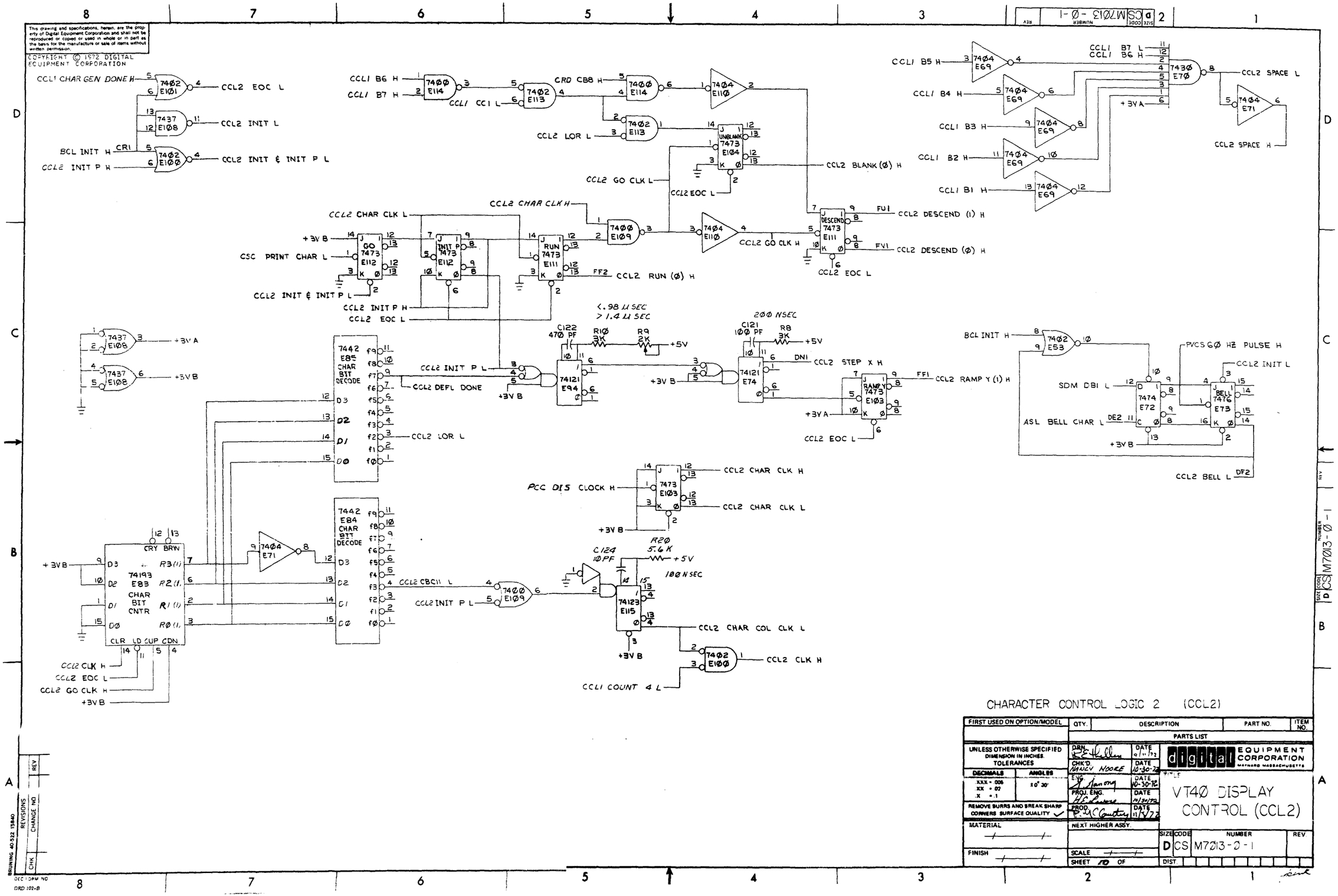

CHARACTER CONTROL LOGIC 2 (CCL2)

FIRST USED ON OPTION/MODEL	QTY.	DESCRIPTION	PART NO.	ITEM NO.
		PARTS LIST		

UNLESS OTHERWISE SPECIFIED DIMENSION IN INCHES. TOLERANCES

DECIMALS	ANGLES
.XXX = .005	±0° 30'
.XX = .02	
.X = .1	

REMOVE BURRS AND BREAK SHARP CORNERS SURFACE QUALITY ✓

MATERIAL

FINISH

DRN. R.E. Hallen DATE 9/11/72
CHK'D. NANCY MOORE DATE 10-30-72
ENG. G. Sanong DATE 10-30-72
PROJ. ENG. H.E. Lawrence DATE 10/30/72
PROD. P.M. Courtney DATE 11/8/72

NEXT HIGHER ASSY.

SCALE

SHEET 10 OF

digital EQUIPMENT CORPORATION MAYNARD MASSACHUSETTS

TITLE VT40 DISPLAY CONTROL (CCL2)

SIZE D CODE CS NUMBER M7013-0-1 REV

DIST.

REVISIONS CHANGE NO. REV CHK

BRUNING 40-522 15840

DEC FORM NO DRD 102-B

This drawing and specifications, herein, are the property of Digital Equipment Corporation and shall not be reproduced or copied or used in whole or in part as the basis for the manufacture or sale of items without written permission.

COPYRIGHT © 1972 DIGITAL EQUIPMENT CORPORATION

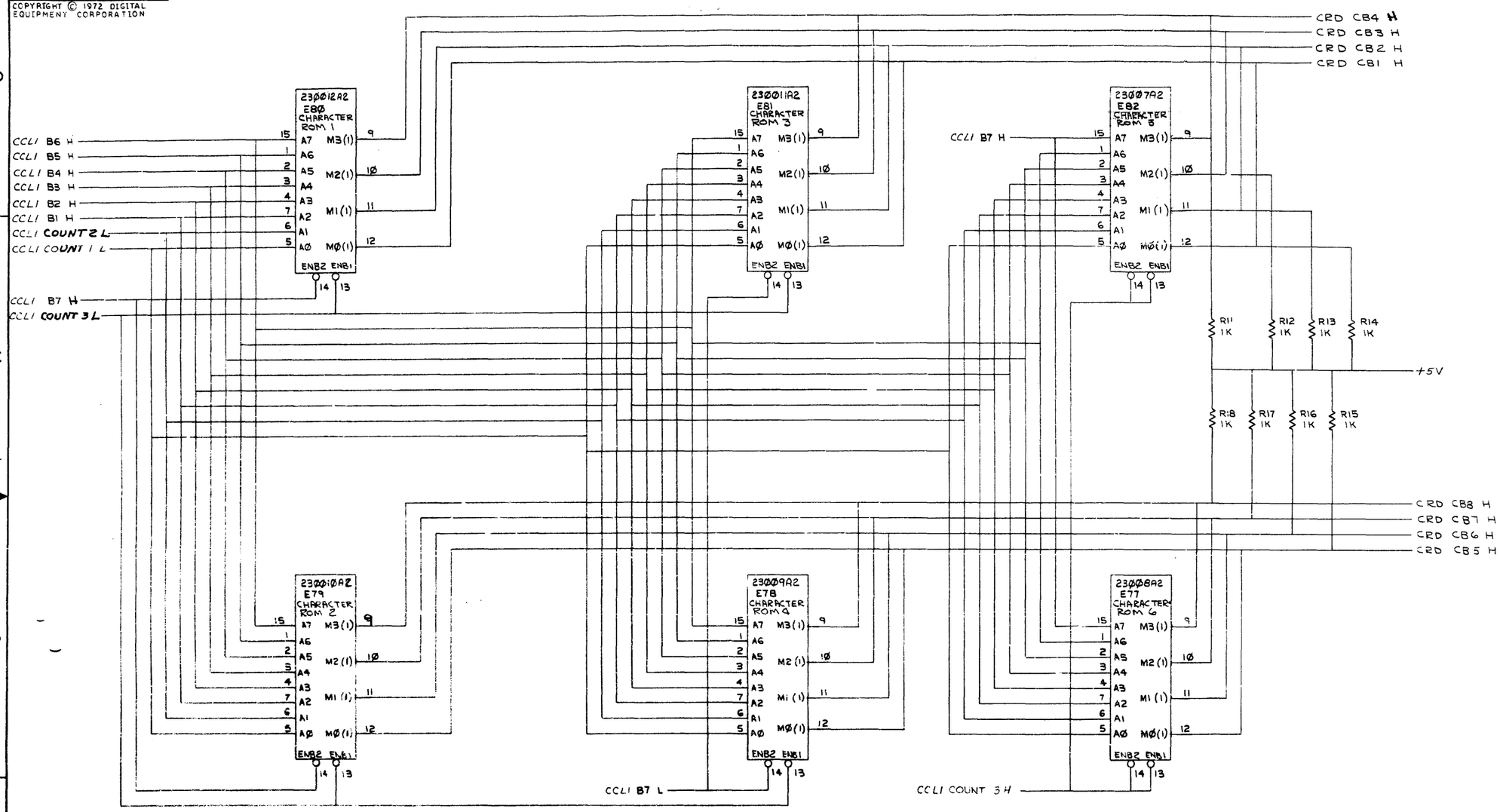

CHARACTER ROMS DECODE (CRD)

FIRST USED ON OPTION/MODEL	QTY.	DESCRIPTION	PART NO.	ITEM NO.
		PARTS LIST		

UNLESS OTHERWISE SPECIFIED DIMENSION IN INCHES. TOLERANCES

DECIMALS	ANGLES
.XXX = .005	±0° 30'
.XX = .02	
.X = .1	

REMOVE BURRS AND BREAK SHARP CORNERS SURFACE QUALITY ✓

MATERIAL

FINISH

DRN. R E Hellen	DATE 9/14/72	digital EQUIPMENT CORPORATION MAYNARD MASSACHUSETTS
CHK'D. NANCY MOORE	DATE 10-30-72	
ENG. [signature]	DATE 10-30-72	TITLE VT4Ø DISPLAY CONTROL (CRD)
PROJ. ENG. [signature]	DATE 10/30/72	
PROD. [signature]	DATE 11/3/72	

NEXT HIGHER ASSY.

SCALE

SHEET 11 OF

SIZE	CODE	NUMBER	REV.
D	CS	M7Ø13-Ø-1	

DIST.

REVISIONS: CHK | CHANGE NO | REV

DRAWING 40-522 15840

DEC FORM NO DRD 100-8

This drawing and specifications, herein, are the property of Digital Equipment Corporation and shall not be reproduced or copied or used in whole or in part as the basis for the manufacture or sale of items without written permission.

COPYRIGHT © 1972 DIGITAL EQUIPMENT CORPORATION

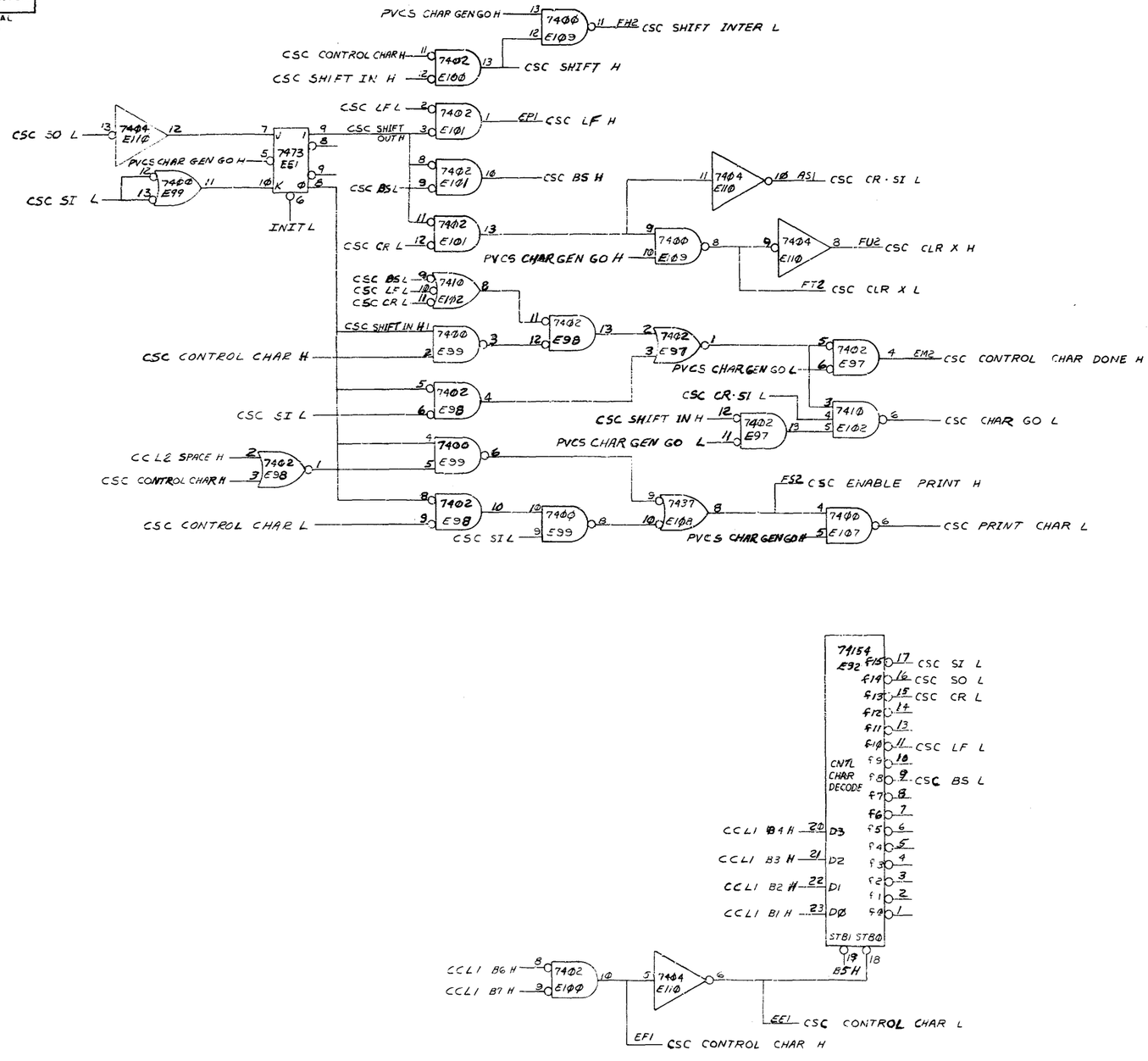

CONTROL & SPECIAL CHARACTERS (CSC)

FIRST USED ON OPTION/MODEL	QTY.	DESCRIPTION	PART NO.	ITEM NO.
		PARTS LIST		

UNLESS OTHERWISE SPECIFIED DIMENSION IN INCHES TOLERANCES
DECIMALS: XXX ± .005, .XX ± .02, .X ± .1
ANGLES: ± 1°
REMOVE BURRS AND BREAK SHARP CORNERS SURFACE QUALITY ✓
MATERIAL
FINISH

DRN. G.J. Manchester	DATE 7-1-72	digital EQUIPMENT CORPORATION MAYNARD MASSACHUSETTS
CHK'D. NANCY MOORE	DATE 10-30-72	
ENG.	DATE	TITLE VT40 DISPLAY CONTROL (CSC)
PROJ. ENG. H.C. Lawrence	DATE 10/30/72	
PROD. F. McGinty	DATE 11/3/72	
NEXT HIGHER ASSY.		
SCALE		SIZE D CODE CS NUMBER M7013-0-1 REV
SHEET 12 OF		DIST.

REVISION / CHANGE NO. / CHK

DRAWING 41322 15840

M7013-0-1 SH 12 SIZE D CODE CS

This drawing and specifications, herein, are the property of Digital Equipment Corporation and shall not be reproduced or copied or used in whole or in part as the basis for the manufacture or sale of items without written permission.

THIS FACE SHEET CONTAINS THE FOLLOWING CHIP PART NUMBERS:

PART NUMBER

23-007A2
23-008A2
23-009A2
23-010A2
23-011 A2
23-012 A2

FIRST USED ON OPTION/MODEL	QTY.	DESCRIPTION	PART NO.	ITEM NO.
GT4Ø		PARTS LIST		

UNLESS OTHERWISE SPECIFIED

UNLESS OTHERWISE SPECIFIED
DIMENSION IN INCHES
TOLERANCES
DECIMALS ± .005 FRACTIONS ± 1/64 ANGLES ± 0°30'
FINAL SURFACE QUALITY
REMOVE BURRS AND BREAK SHARP CORNERS

MATERIAL —//—

FINISH —//—

		DATE
DRN.	C B McCoy	10-2-72
CHK'D.	D K Gelle	10-11-72
ENG.	[illegible]	10-30-72
PROJ. ENG.	H E Lavoie	10/30/72
PROD.	P. McCarthy	11/8/72

NEXT HIGHER ASS'Y
B-DD-GT4Ø-Ø

SCALE —//—

SHEET 1 OF

digital EQUIPMENT CORPORATION
MAYNARD, MASSACHUSETTS

TITLE
CHARACTER GENERATOR ROM PATTERNS

SIZE	CODE	NUMBER	REV.
K	RL	M7Ø13-Ø-8	

DIST.

REVISIONS: REV. | CHANGE NO. | CHK

DEC FORM NO. DRB 100

DEC PART NUMBI 23-007A2
ORIGINATORI JOHN BENTON
DATE OF ORIGINI 8-3-72

DECIMAL LOC	OCTAL LOC	BINARY DATA	OCTAL DATA
0	000	0001	01
1	001	1110	16
2	002	0011	03
3	003	1100	14
4	004	0010	02
5	005	0001	01
6	006	1000	10
7	007	1100	14
8	010	1001	11
9	011	0110	06
10	012	1000	10
11	013	1111	17
12	014	1000	10
13	015	1000	10
14	016	0000	00
15	017	0000	00
16	020	0000	00
17	021	1111	17
18	022	0010	02
19	023	0001	01
20	024	0000	00
21	025	0000	00
22	026	0000	00
23	027	0000	00
24	030	0000	00
25	031	1000	10
26	032	0100	04
27	033	0011	03
28	034	1000	10
29	035	1100	14
30	036	0000	00
31	037	0000	00
32	040	1111	17
33	041	0000	00
34	042	1111	17
35	043	0000	00

DEC PART NUMBI 23-007A2
ORIGINATORI JOHN BENTON
DATE OF ORIGINI 8-3-72

DECIMAL LOC	OCTAL LOC	BINARY DATA	OCTAL DATA
36	044	1010	12
37	045	1001	11
38	046	0111	07
39	047	0000	00
40	050	0000	00
41	051	0000	00
42	052	1001	11
43	053	0000	00
44	054	0000	00
45	055	0000	00
46	056	0001	01
47	057	0000	00
48	060	0000	00
49	061	0000	00
50	062	0100	04
51	063	0010	02
52	064	0000	00
53	065	0000	00
54	066	1000	10
55	067	1000	10
56	070	0001	01
57	071	0001	01
58	072	0010	02
59	073	0001	01
60	074	0000	00
61	075	0000	00
62	076	1000	10
63	077	1111	17
64	100	0000	00
65	101	0000	00
66	102	0000	00
67	103	0000	00
68	104	0000	00
69	105	0000	00
70	106	0111	07
71	107	0001	01

DEC PART NUMB: 23-007A2
ORIGINATOR: JOHN BENTON
DATE OF ORIGIN: 8-3-72

DECIMAL LOC	OCTAL LOC	BINARY DATA	OCTAL DATA
72	110	0011	03
73	111	0000	00
74	112	1010	12
75	113	0100	04
76	114	0101	05
77	115	1000	10
78	116	0000	00
79	117	0000	00
80	120	1000	10
81	121	0000	00
82	122	0000	00
83	123	0000	00
84	124	0001	01
85	125	0010	02
86	126	0000	00
87	127	0000	00
88	130	0000	00
89	131	0000	00
90	132	0000	00
91	133	0000	00
92	134	0000	00
93	135	0000	00
94	136	0000	00
95	137	0000	00
96	140	1000	10
97	141	0111	07
98	142	0000	00
99	143	0000	00
100	144	1000	10
101	145	1000	10
102	146	1000	10
103	147	0111	07
104	150	1111	17
105	151	0010	02
106	152	1000	10
107	153	0111	07

DEC PART NUMB: 23-007A2
ORIGINATOR: JOHN BENTON
DATE OF ORIGIN: 8-3-72

DECIMAL LOC	OCTAL LOC	BINARY DATA	OCTAL DATA
108	154	1001	11
109	155	0110	06
110	156	0000	00
111	157	0000	00
112	160	1000	10
113	161	0111	07
114	162	0100	04
115	163	0011	03
116	164	0000	00
117	165	0000	00
118	166	0000	00
119	167	0000	00
120	170	0100	04
121	171	0000	00
122	172	0001	01
123	173	0001	01
124	174	0000	00
125	175	0000	00
126	176	0000	00
127	177	0000	00
128	200	1001	11
129	201	0100	04
130	202	0001	01
131	203	1111	17
132	204	1000	10
133	205	0111	07
134	206	1000	10
135	207	0100	04
136	210	0100	04
137	211	0011	03
138	212	1000	10
139	213	1100	14
140	214	0000	00
141	215	0000	00
142	216	1001	11
143	217	1111	17

DEC PART NUMBI 23-007A2
ORIGINATORI JOHN BENTON
DATE OF ORIGINI 8-3-72

DECIMAL LOC	OCTAL LOC	BINARY DATA	OCTAL DATA
144	220	0000	00
145	221	1111	17
146	222	0000	00
147	223	0000	00
148	224	0111	07
149	225	0000	00
150	226	0010	02
151	227	1100	14
152	230	1000	10
153	231	1100	14
154	232	0000	00
155	233	1111	17
156	234	0010	02
157	235	1111	17
158	236	0100	04
159	237	0011	03
160	240	0000	00
161	241	0000	00
162	242	0100	04
163	243	1011	13
164	244	0010	02
165	245	1100	14
166	246	1001	11
167	247	0110	06
168	250	1000	10
169	251	0000	00
170	252	1000	10
171	253	0111	07
172	254	0000	00
173	255	0000	00
174	256	0100	04
175	257	1111	17
176	260	0010	02
177	261	1100	14
178	262	0000	00
179	263	0000	00

DEC PART NUMBI 23-007A2
ORIGINATORI JOHN BENTON
DATE OF ORIGINI 8-3-72

DECIMAL LOC	OCTAL LOC	BINARY DATA	OCTAL DATA
180	264	1000	10
181	265	1000	10
182	266	1000	10
183	267	0000	00
184	270	0010	02
185	271	0100	04
186	272	1111	17
187	273	0000	00
188	274	0000	00
189	275	0000	00
190	276	1000	10
191	277	1000	10
192	300	0000	00
193	301	0000	00
194	302	0101	05
195	303	1111	17
196	304	1000	10
197	305	0111	07
198	306	1000	10
199	307	0100	04
200	310	0100	04
201	311	1111	17
202	312	1001	11
203	313	1001	11
204	314	0000	00
205	315	0000	00
206	316	1001	11
207	317	0111	07
208	320	0000	00
209	321	1111	17
210	322	1000	10
211	323	0000	00
212	324	0111	07
213	325	0000	00
214	326	0100	04
215	327	1000	10

DEC PART NUMBI 23-007A2
ORIGINATORI JOHN BENTON
DATE OF ORIGINI 8-3-72

DECIMAL LOC	OCTAL LOC	BINARY DATA	OCTAL DATA
216	330	1000	10
217	331	0000	00
218	332	0000	00
219	333	1111	17
220	334	0000	00
221	335	1111	17
222	336	1000	10
223	337	0111	07
224	340	0010	02
225	341	0001	01
226	342	0001	01
227	343	1111	17
228	344	0000	00
229	345	0000	00
230	346	1001	11
231	347	0110	06
232	350	1000	10
233	351	0000	00
234	352	0100	04
235	353	1111	17
236	354	0100	04
237	355	0011	03
238	356	1000	10
239	357	0111	07
240	360	0010	02
241	361	1100	14
242	362	1001	11
243	363	0111	07
244	364	1000	10
245	365	1000	10
246	366	1000	10
247	367	1000	10
248	370	0000	00
249	371	0000	00
250	372	0110	06
251	373	0001	01

DEC PART NUMBI 23-007A2
ORIGINATORI JOHN BENTON
DATE OF ORIGINI 8-3-72

DECIMAL LOC	OCTAL LOC	BINARY DATA	OCTAL DATA
252	374	0001	01
253	375	0000	00
254	376	1111	17
255	377	1111	17

DEC PART NUMBI 23-008A2
ORIGINATORI JOHN BENTON
DATE OF ORIGINI 8-4-72

DECIMAL LOC	OCTAL LOC	BINARY DATA	OCTAL DATA
0	000	0001	01
1	001	1010	12
2	002	0100	04
3	003	1000	10
4	004	1000	10
5	005	0100	04
6	006	0100	04
7	007	1000	10
8	010	0000	00
9	011	1000	10
10	012	0100	04
11	013	1111	17
12	014	0001	01
13	015	0011	03
14	016	0101	05
15	017	1001	11
16	020	0000	00
17	021	0010	02
18	022	0101	05
19	023	1001	11
20	024	0000	00
21	025	0000	00
22	026	0000	00
23	027	1000	10
24	030	0000	00
25	031	0100	04
26	032	0100	04
27	033	1100	14
28	034	0010	02
29	035	0100	04
30	036	1000	10
31	037	0100	04
32	040	1110	16
33	041	0001	01
34	042	0001	01
35	043	0001	01

DEC PART NUMBI 23-008A2
ORIGINATORI JOHN BENTON
DATE OF ORIGINI 8-4-72

DECIMAL LOC	OCTAL LOC	BINARY DATA	OCTAL DATA
36	044	0010	02
37	045	1110	16
38	046	0000	00
39	047	1111	17
40	050	0000	00
41	051	1000	10
42	052	1000	10
43	053	1010	12
44	054	0000	00
45	055	0110	06
46	056	1001	11
47	057	1001	11
48	060	0000	00
49	061	0000	00
50	062	0000	00
51	063	1000	10
52	064	0000	00
53	065	0000	00
54	066	1100	14
55	067	0000	00
56	070	1000	10
57	071	1110	16
58	072	1001	11
59	073	1001	11
60	074	0000	00
61	075	0000	00
62	076	0000	00
63	077	0000	00
64	100	0100	04
65	101	0010	02
66	102	1110	16
67	103	0010	02
68	104	0000	00
69	105	1111	17
70	106	0000	00
71	107	0000	00

DEC PART NUMBI 23-008A2
ORIGINATORI JOHN BENTON
DATE OF ORIGINI 8-4-72

DECIMAL LOC	OCTAL LOC	BINARY DATA	OCTAL DATA
72	110	1000	10
73	111	0100	04
74	112	0010	02
75	113	0010	02
76	114	1000	10
77	115	0100	04
78	116	0110	06
79	117	1010	12
80	120	0100	04
81	121	0010	02
82	122	0010	02
83	123	1110	16
84	124	0000	00
85	125	1000	10
86	126	0100	04
87	127	0010	02
88	130	1000	10
89	131	1100	14
90	132	1010	12
91	133	1000	10
92	134	1000	10
93	135	1000	10
94	136	1000	10
95	137	1010	12
96	140	0000	00
97	141	0100	04
98	142	0010	02
99	143	1111	17
100	144	0000	00
101	145	0000	00
102	146	0000	00
103	147	1110	16
104	150	0000	00
105	151	1111	17
106	152	0001	01
107	153	0001	01

DEC PART NUMBI 23-008A2
ORIGINATORI JOHN BENTON
DATE OF ORIGINI 8-4-72

DECIMAL LOC	OCTAL LOC	BINARY DATA	OCTAL DATA
108	154	0000	00
109	155	0000	00
110	156	0000	00
111	157	1111	17
112	160	0100	04
113	161	0100	04
114	162	0100	04
115	163	1100	14
116	164	0100	04
117	165	0010	02
118	166	0010	02
119	167	0100	04
120	170	0000	00
121	171	0100	04
122	172	1000	10
123	173	0000	00
124	174	1111	17
125	175	0001	01
126	176	0001	01
127	177	0001	01
128	200	0000	00
129	201	0000	00
130	202	0000	00
131	203	0000	00
132	204	0000	00
133	205	0000	00
134	206	1111	17
135	207	0000	00
136	210	0000	00
137	211	0111	07
138	212	0000	00
139	213	0000	00
140	214	0000	00
141	215	0100	04
142	216	1111	17
143	217	0100	04

DEC PART NUMBER 23-008A2
ORIGINATOR: JOHN BENTON
DATE OF ORIGIN: 8-4-72

DECIMAL LOC	OCTAL LOC	BINARY DATA	OCTAL DATA
144	220	1100	14
145	221	1010	12
146	222	1111	17
147	223	1010	12
148	224	0010	02
149	225	0101	05
150	226	0010	02
151	227	1000	10
152	230	0110	06
153	231	1001	11
154	232	1001	11
155	233	0110	06
156	234	0000	00
157	235	0000	00
158	236	0100	04
159	237	0010	02
160	240	0000	00
161	241	0000	00
162	242	1100	14
163	243	0010	02
164	244	0000	00
165	245	0001	01
166	246	0010	02
167	247	1100	14
168	250	0000	00
169	251	0010	02
170	252	0100	04
171	253	1111	17
172	254	0000	00
173	255	1000	10
174	256	1000	10
175	257	1110	16
176	260	0000	00
177	261	0000	00
178	262	0000	00
179	263	0000	00

DEC PART NUMBER 23-008A2
ORIGINATOR: JOHN BENTON
DATE OF ORIGIN: 8-4-72

DECIMAL LOC	OCTAL LOC	BINARY DATA	OCTAL DATA
180	264	0000	00
181	265	1000	10
182	266	1000	10
183	267	1000	10
184	270	0000	00
185	271	0000	00
186	272	0000	00
187	273	0000	00
188	274	0000	00
189	275	0000	00
190	276	0000	00
191	277	1000	10
192	300	1110	16
193	301	0001	01
194	302	0001	01
195	303	1001	11
196	304	0000	00
197	305	0010	02
198	306	1111	17
199	307	0000	00
200	310	0010	02
201	311	0001	01
202	312	1001	11
203	313	1001	11
204	314	0011	03
205	315	0001	01
206	316	1001	11
207	317	1101	15
208	320	0000	00
209	321	1000	10
210	322	0100	04
211	323	0010	02
212	324	1111	17
213	325	1001	11
214	326	1001	11
215	327	1001	11

DEC PART NUMB: 23-008A2
ORIGINATOR: JOHN BENTON
DATE OF ORIGIN: 8-4-72

DECIMAL LOC	OCTAL LOC	BINARY DATA	OCTAL DATA
216	330	1100	14
217	331	0010	02
218	332	0001	01
219	333	0001	01
220	334	0011	03
221	335	0001	01
222	336	0001	01
223	337	1001	11
224	340	0110	06
225	341	1001	11
226	342	1001	11
227	343	1001	11
228	344	0110	06
229	345	1001	11
230	346	1001	11
231	347	1001	11
232	350	0000	00
233	351	0000	00
234	352	0110	06
235	353	0110	06
236	354	0000	00
237	355	0000	00
238	356	0110	06
239	357	0110	06
240	360	0000	00
241	361	1000	10
242	362	0100	04
243	363	0010	02
244	364	0000	00
245	365	0100	04
246	366	0100	04
247	367	0100	04
248	370	0000	00
249	371	0001	01
250	372	0010	02
251	373	0100	04

DEC PART NUMB: 23-008A2
ORIGINATOR: JOHN BENTON
DATE OF ORIGIN: 8-4-72

DECIMAL LOC	OCTAL LOC	BINARY DATA	OCTAL DATA
252	374	0010	02
253	375	0001	01
254	376	1001	11
255	377	1001	11

DEC PART NUMBR 23-009A2
ORIG NATOR: JOHN BENTON
DATE OF ORIGIN: 8-4-72

DECIMAL LOC	OCTAL LOC	BINARY DATA	OCTAL DATA
0	000	1111	17
1	001	0000	00
2	002	0000	00
3	003	0000	00
4	004	0111	07
5	005	1000	10
6	006	0100	04
7	007	0010	02
8	010	0000	00
9	011	0001	01
10	012	0010	02
11	013	1111	17
12	014	1100	14
13	015	1010	12
14	016	1001	11
15	017	1000	10
16	020	0000	00
17	021	0110	06
18	022	1001	11
19	023	1000	10
20	024	1100	14
21	025	1010	12
22	026	1001	11
23	027	1000	10
24	030	0000	00
25	031	0000	00
26	032	0000	00
27	033	1111	17
28	034	0110	06
29	035	1001	11
30	036	1000	10
31	037	0111	07
32	040	1111	17
33	041	0000	00
34	042	0000	00
35	043	0000	00

DEC PART NUMBR 23-009A2
ORIGINATOR: JOHN BENTON
DATE OF ORIGIN: 8-4-72

DECIMAL LOC	OCTAL LOC	BINARY DATA	OCTAL DATA
36	044	0000	00
37	045	0001	01
38	046	0010	02
39	047	1111	17
40	050	0000	00
41	051	0000	00
42	052	0000	00
43	053	0010	02
44	054	0000	00
45	055	0000	00
46	056	0000	00
47	057	0000	00
48	060	0000	00
49	061	1000	10
50	062	0000	00
51	063	0000	00
52	064	1000	10
53	065	0100	04
54	066	0011	03
55	067	0100	04
56	070	1000	10
57	071	1111	17
58	072	1000	10
59	073	1000	10
60	074	0000	00
61	075	0000	00
62	076	0000	00
63	077	0000	00
64	100	0000	00
65	101	0000	00
66	102	1111	17
67	103	0000	00
68	104	0000	00
69	105	1111	17
70	106	0000	00
71	107	0000	00

DEC PART NUMBI 23-009A2
ORIGINATORI JOHN BENTON
DATE OF ORIGINI 8-4-72

DECIMAL LOC	OCTAL LOC	BINARY DATA	OCTAL DATA
72	110	1011	13
73	111	1100	14
74	112	0000	00
75	113	0100	04
76	114	0011	03
77	115	0100	04
78	116	1000	10
79	117	1000	10
80	120	0000	00
81	121	0000	00
82	122	0000	00
83	123	1111	17
84	124	0000	00
85	125	0011	03
86	126	0101	05
87	127	1001	11
88	130	0000	00
89	131	0001	01
90	132	0010	02
91	133	0000	00
92	134	0000	00
93	135	0000	00
94	136	0000	00
95	137	0010	02
96	140	0000	00
97	141	0000	00
98	142	0000	00
99	143	0111	07
100	144	0000	00
101	145	0010	02
102	146	0100	04
103	147	1111	17
104	150	0000	00
105	151	1111	17
106	152	0000	00
107	153	0000	00

DEC PART NUMBI 23-009A2
ORIGINATORI JOHN BENTON
DATE OF ORIGINI 8-4-72

DECIMAL LOC	OCTAL LOC	BINARY DATA	OCTAL DATA
108	154	0000	00
109	155	1000	10
110	156	1000	10
111	157	1111	17
112	160	0001	01
113	161	0101	05
114	162	0011	03
115	163	0001	01
116	164	0010	02
117	165	0001	01
118	166	0001	01
119	167	0010	02
120	170	0000	00
121	171	0000	00
122	172	0000	00
123	173	0001	01
124	174	1111	17
125	175	1000	10
126	176	1000	10
127	179	1000	10
128	200	0000	00
129	201	0000	00
130	202	0000	00
131	203	0000	00
132	204	0000	00
133	205	0000	00
134	206	1011	13
135	207	0000	00
136	210	0000	00
137	211	0000	00
138	212	0000	00
139	213	0000	00
140	214	0000	00
141	215	0001	01
142	216	0111	07
143	217	0001	01

DEC PART NUMBER 23-009A2
ORIGINATOR: JOHN BENTON
DATE OF ORIGIN: 8-4-72

DECIMAL LOC	OCTAL LOC	BINARY DATA	OCTAL DATA
144	220	0100	04
145	221	0100	04
146	222	1111	17
147	223	0100	04
148	224	0100	04
149	225	0010	02
150	226	0001	01
151	227	0100	04
152	230	0110	06
153	231	1001	11
154	232	1001	11
155	233	0110	06
156	234	0000	00
157	235	0000	00
158	236	0000	00
159	237	0000	00
160	240	0000	00
161	241	0000	00
162	242	0011	03
163	243	0100	04
164	244	0000	00
165	245	1000	10
166	246	0100	04
167	247	0011	03
168	250	0000	00
169	251	0010	02
170	252	0001	01
171	253	0000	00
172	254	0000	00
173	255	0000	00
174	256	0000	00
175	257	0011	03
176	260	0000	00
177	261	1000	10
178	262	0110	06
179	263	0000	00

DEC PART NUMBER 23-009A2
ORIGINATOR: JOHN BENTON
DATE OF ORIGIN: 8-4-72

DECIMAL LOC	OCTAL LOC	BINARY DATA	OCTAL DATA
180	264	0000	00
181	265	0000	00
182	266	0000	00
183	267	0000	00
184	270	0000	00
185	271	0000	00
186	272	1100	14
187	273	1100	14
188	274	0100	04
189	275	0010	02
190	276	0001	01
191	277	0000	00
192	300	0111	07
193	301	1010	12
194	302	1001	11
195	303	1000	10
196	304	0000	00
197	305	1000	10
198	306	1111	17
199	307	1000	10
200	310	1110	16
201	311	1001	11
202	312	1000	10
203	313	1000	10
204	314	0100	04
205	315	1000	10
206	316	1000	10
207	317	1000	10
208	320	0011	03
209	321	0010	02
210	322	0010	02
211	323	0010	02
212	324	0100	04
213	325	1000	10
214	326	1000	10
215	327	1000	10

DEC PART NUMBI 23-009A2
ORIGINATORI JOHN BENTON
DATE OF ORIGINI 8-4-72

DECIMAL LOC	OCTAL LOC	BINARY DATA	OCTAL DATA
216	330	0011	03
217	331	0110	06
218	332	1001	11
219	333	1001	11
220	334	0000	00
221	335	1110	16
222	336	0001	01
223	337	0000	00
224	340	0111	07
225	341	1000	10
226	342	1000	10
227	343	1000	10
228	344	0100	04
229	345	1000	10
230	346	1000	10
231	347	1000	10
232	350	0000	00
233	351	0000	00
234	352	0110	06
235	353	0110	06
236	354	0000	00
237	355	0000	00
238	356	1000	10
239	357	0110	06
240	360	0000	00
241	361	0000	00
242	362	0001	01
243	363	0010	02
244	364	0000	00
245	365	0001	01
246	366	0001	01
247	367	0001	01
248	370	0000	00
249	371	0100	04
250	372	0010	02
251	373	0001	01

DEC PART NUMBI 23-009A2
ORIGINATORI JOHN BENTON
DATE OF ORIGINI 8-4-72

DECIMAL LOC	OCTAL LOC	BINARY DATA	OCTAL DATA
252	374	0000	00
253	375	0000	00
254	376	1011	13
255	377	0000	00

DEC PART NUMBI 23-010A2
ORIGINATORI JOHN BENTON
DATE OF ORIGINI 8-15-72

DECIMAL LOC	OCTAL LOC	BINARY DATA	OCTAL DATA
0	000	1100	14
1	001	0010	02
2	002	1001	11
3	003	0101	05
4	004	1100	14
5	005	0010	02
6	006	0001	01
7	007	0001	01
8	010	0001	01
9	011	1111	17
10	012	1001	11
11	013	1001	11
12	014	1100	14
13	015	0010	02
14	016	0001	01
15	017	0001	01
16	020	0001	01
17	021	1111	17
18	022	0001	01
19	023	0001	01
20	024	0001	01
21	025	1111	17
22	026	1001	11
23	027	1001	11
24	030	0001	01
25	031	1111	17
26	032	1001	11
27	033	1001	11
28	034	1100	14
29	035	0010	02
30	036	0001	01
31	037	0001	01
32	040	1111	17
33	041	1000	10
34	042	1000	10
35	043	1000	10

DEC PART NUMBI 23-010A2
ORIGINATORI JOHN BENTON
DATE OF ORIGINI 8-15-72

DECIMAL LOC	OCTAL LOC	BINARY DATA	OCTAL DATA
36	044	0000	00
37	045	0001	01
38	046	1111	17
39	047	0001	01
40	050	0000	00
41	051	0000	00
42	052	0001	01
43	053	0001	01
44	054	1111	17
45	055	0000	00
46	056	1000	10
47	057	0100	04
48	060	0001	01
49	061	1111	17
50	062	0001	01
51	063	0000	00
52	064	1111	17
53	065	0010	02
54	066	1100	14
55	067	1100	14
56	070	1111	17
57	071	0100	04
58	072	1000	10
59	073	0000	00
60	074	1100	14
61	075	0010	02
62	076	0001	01
63	077	0001	01
64	100	0001	01
65	101	1111	17
66	102	1001	11
67	103	1001	11
68	104	1100	14
69	105	0010	02
70	106	0001	01
71	107	0001	01

DEC PART NUMBI 23-010A2
ORIGINATOR: JOHN BENTON
DATE OF ORIGIN: 8-15-72

DECIMAL LOC	OCTAL LOC	BINARY DATA	OCTAL DATA
72	110	0001	01
73	111	1111	17
74	112	1001	11
75	113	1001	11
76	114	0100	04
77	115	1010	12
78	116	1001	11
79	117	1001	11
80	120	0011	03
81	121	0001	01
82	122	0001	01
83	123	1111	17
84	124	1111	17
85	125	0000	00
86	126	0000	00
87	127	0000	00
88	130	1111	17
89	131	0000	00
90	132	0000	00
91	133	0000	00
92	134	1111	17
93	135	0000	00
94	136	0000	00
95	137	0000	00
96	140	0011	03
97	141	0100	04
98	142	1000	10
99	143	1000	10
100	144	0000	00
101	145	0111	07
102	146	1000	10
103	147	0000	00
104	150	0001	01
105	151	0001	01
106	152	0001	01
107	153	1001	11

DEC PART NUMBI 23-010A2
ORIGINATOR: JOHN BENTON
DATE OF ORIGIN: 8-15-72

DECIMAL LOC	OCTAL LOC	BINARY DATA	OCTAL DATA
108	154	0000	00
109	155	1111	17
110	156	0001	01
111	157	0001	01
112	160	0010	02
113	161	0100	04
114	162	1000	10
115	163	0000	00
116	164	0000	00
117	165	0001	01
118	166	0001	01
119	167	0001	01
120	170	0000	00
121	171	1000	10
122	172	0100	04
123	173	0010	02
124	174	0000	00
125	175	0000	00
126	176	0000	00
127	177	0000	00
128	200	0000	00
129	201	0000	00
130	202	0001	01
131	203	0010	02
132	204	0000	00
133	205	0100	04
134	206	0100	04
135	207	0100	04
136	210	0000	00
137	211	1111	17
138	212	1000	10
139	213	0100	04
140	214	0000	00
141	215	1000	10
142	216	0100	04
143	217	0100	04

DEC PART NUMBI 23-010A2
ORIGINATORI JOHN BENTON
DATE OF ORIGINI 8-15-72

DECIMAL LOC	OCTAL LOC	BINARY DATA	OCTAL DATA
144	220	0000	00
145	221	1000	10
146	222	0100	04
147	223	0100	04
148	224	0000	00
149	225	1000	10
150	226	0100	04
151	227	0100	04
152	230	0000	00
153	231	0100	04
154	232	1110	16
155	233	0101	05
156	234	0000	00
157	235	1110	16
158	236	0001	01
159	237	0001	01
160	240	0000	00
161	241	1111	17
162	242	1000	10
163	243	0100	04
164	244	0000	00
165	245	0000	00
166	246	0100	04
167	247	1101	15
168	250	0000	00
169	251	0000	00
170	252	0000	00
171	253	0001	01
172	254	0000	00
173	255	1111	17
174	256	0000	00
175	257	1000	10
176	260	0000	00
177	261	0000	00
178	262	1111	17
179	263	0000	00

DEC PART NUMBI 23-010A2
ORIGINATORI JOHN BENTON
DATE OF ORIGINI 8-15-72

DECIMAL LOC	OCTAL LOC	BINARY DATA	OCTAL DATA
180	264	0000	00
181	265	1100	14
182	266	0100	04
183	267	1000	10
184	270	0000	00
185	271	1100	14
186	272	1000	10
187	273	0100	04
188	274	0000	00
189	275	1000	10
190	276	0100	04
191	277	0100	04
192	300	0000	00
193	301	1111	17
194	302	0010	02
195	303	0001	01
196	304	0000	00
197	305	1110	16
198	306	0001	01
199	307	0001	01
200	310	0000	00
201	311	1100	14
202	312	0000	00
203	313	1000	10
204	314	0000	00
205	315	1000	10
206	316	0100	04
207	317	0100	04
208	320	0000	00
209	321	0100	04
210	322	1111	17
211	323	0100	04
212	324	0000	00
213	325	1100	14
214	326	0000	00
215	327	0000	00

DEC PART NUMBI 23-010A2
ORIGINATORI JOHN BENTON
DATE OF ORIGINI 8-15-72

DECIMAL LOC	OCTAL LOC	BINARY DATA	OCTAL DATA
216	330	0000	00
217	331	1100	14
218	332	0000	00
219	333	0000	00
220	334	0000	00
221	335	1100	14
222	336	0000	00
223	337	1000	10
224	340	0000	00
225	341	0100	04
226	342	1000	10
227	343	0000	00
228	344	0000	00
229	345	1111	17
230	346	0000	00
231	347	0000	00
232	350	0000	00
233	351	0100	04
234	352	0100	04
235	353	0100	04
236	354	0000	00
237	355	1000	10
238	356	0110	06
239	357	0001	01
240	360	0000	00
241	361	0000	00
242	362	0111	07
243	363	0000	00
244	364	0000	00
245	365	0001	01
246	366	0001	01
247	367	0001	01
248	370	0000	00
249	371	1000	10
250	372	0100	04
251	373	1000	10

DEC PART NUMBI 23-010A2
ORIGINATOR: JOHN BENTON
DATE OF ORIGIN: 8-15-72

DECIMAL LOC	OCTAL LOC	BINARY DATA	OCTAL DATA
252	374	0000	00
253	375	1111	17
254	376	1111	17
255	377	1111	17

DECIMAL LOC	OCTAL LOC	BINARY DATA	OCTAL DATA
144	220	1000	10
145	221	1111	17
146	222	0000	00
147	223	0000	00
148	224	1111	17
149	225	0001	01
150	226	0010	02
151	227	0001	01
152	230	0000	00
153	231	0000	00
154	232	0010	02
155	233	1111	17
156	234	0000	00
157	235	1111	17
158	236	0010	02
159	237	1100	14
160	240	1001	11
161	241	0110	06
162	242	0010	02
163	243	1100	14
164	244	1001	11
165	245	0110	06
166	246	0001	01
167	247	0010	02
168	250	0001	01
169	251	0011	03
170	252	0000	00
171	253	1111	17
172	254	1000	10
173	255	0111	07
174	256	0000	00
175	257	1111	17
176	260	0100	04
177	261	0011	03
178	262	1000	10
179	263	0111	07

DECIMAL LOC	OCTAL LOC	BINARY DATA	OCTAL DATA
180	264	0101	05
181	265	0011	03
182	266	0001	01
183	267	0000	00
184	270	0000	00
185	271	0000	00
186	272	1111	17
187	273	0000	00
188	274	0100	04
189	275	1000	10
190	276	0000	00
191	277	0000	00
192	300	0100	04
193	301	0000	00
194	302	0100	04
195	303	1000	10
196	304	0100	04
197	305	1000	10
198	306	0100	04
199	307	1000	10
200	310	1000	10
201	311	1111	17
202	312	0100	04
203	313	1000	10
204	314	0101	05
205	315	0001	01
206	316	0010	02
207	317	1111	17
208	320	0100	04
209	321	1000	10
210	322	0000	00
211	323	0000	00
212	324	1111	17
213	325	0000	00
214	326	0100	04
215	327	0100	04

DEC PART NUMBI 23-011A2
ORIGINATORI JOHN BENTON
DATE OF ORIGINI 8-15-72

DECIMAL LOC	OCTAL LOC	BINARY DATA	OCTAL DATA
216	330	0000	00
217	331	0000	00
218	332	0100	04
219	333	1000	10
220	334	0100	04
221	335	1000	10
222	336	0100	04
223	337	1000	10
224	340	0001	01
225	341	1110	16
226	342	0010	02
227	343	1111	17
228	344	0100	04
229	345	0100	04
230	346	0100	04
231	347	0100	04
232	350	0100	04
233	351	0000	00
234	352	0000	00
235	353	1100	14
236	354	0000	00
237	355	1100	14
238	356	0000	00
239	357	1100	14
240	360	1000	10
241	361	0100	04
242	362	0000	00
243	363	1111	17
244	364	1100	14
245	365	0100	04
246	366	0001	01
247	367	0001	01
248	370	0000	00
249	371	0000	00
250	372	0110	06
251	373	1000	10

DEC PART NUMBI 23-011A2
ORIGINATORI JOHN BENTON
DATE OF ORIGINI 8-15-72

DECIMAL LOC	OCTAL LOC	BINARY DATA	OCTAL DATA
252	374	0000	00
253	375	1100	14
254	376	1111	17
255	377	1111	17

DECIMAL LOC	OCTAL LOC	BINARY DATA	OCTAL DATA
144	220	1000	10
145	221	1111	17
146	222	0000	00
147	223	0000	00
148	224	1111	17
149	225	0001	01
150	226	0010	02
151	227	0001	01
152	230	0000	00
153	231	0000	00
154	232	0010	02
155	233	1111	17
156	234	0000	00
157	235	1111	17
158	236	0010	02
159	237	1100	14
160	240	1001	11
161	241	0110	06
162	242	0010	02
163	243	1100	14
164	244	1001	11
165	245	0110	06
166	246	0001	01
167	247	0010	02
168	250	0001	01
169	251	0011	03
170	252	0000	00
171	253	1111	17
172	254	1000	10
173	255	0111	07
174	256	0000	00
175	257	1111	17
176	260	0100	04
177	261	0011	03
178	262	1000	10
179	263	0111	07

DECIMAL LOC	OCTAL LOC	BINARY DATA	OCTAL DATA
180	264	0101	05
181	265	0011	03
182	266	0001	01
183	267	0000	00
184	270	0000	00
185	271	0000	00
186	272	1111	17
187	273	0000	00
188	274	0100	04
189	275	1000	10
190	276	0000	00
191	277	0000	00
192	300	0100	04
193	301	0000	00
194	302	0100	04
195	303	1000	10
196	304	0100	04
197	305	1000	10
198	306	0100	04
199	307	1000	10
200	310	1000	10
201	311	1111	17
202	312	0100	04
203	313	1000	10
204	314	0101	05
205	315	0001	01
206	316	0010	02
207	317	1111	17
208	320	0100	04
209	321	1000	10
210	322	0000	00
211	323	0000	00
212	324	1111	17
213	325	0000	00
214	326	0100	04
215	327	0100	04

DEC PART NUMB: 23-011A2
ORIGINATOR: JOHN BENTON
DATE OF ORIGIN: 8-15-72

DECIMAL LOC	OCTAL LOC	BINARY DATA	OCTAL DATA
216	330	0000	00
217	331	0000	00
218	332	0100	04
219	333	1000	10
220	334	0100	04
221	335	1000	10
222	336	0100	04
223	337	1000	10
224	340	0001	01
225	341	1110	16
226	342	0010	02
227	343	1111	17
228	344	0100	04
229	345	0100	04
230	346	0100	04
231	347	0100	04
232	350	0100	04
233	351	0000	00
234	352	0000	00
235	353	1100	14
236	354	0000	00
237	355	1100	14
238	356	0000	00
239	357	1100	14
240	360	1000	10
241	361	0100	04
242	362	0000	00
243	363	1111	17
244	364	1100	14
245	365	0100	04
246	366	0001	01
247	367	0001	01
248	370	0000	00
249	371	0000	00
250	372	0110	06
251	373	1000	10

DEC PART NUMB: 23-011A2
ORIGINATOR: JOHN BENTON
DATE OF ORIGIN: 8-15-72

DECIMAL LOC	OCTAL LOC	BINARY DATA	OCTAL DATA
252	374	0000	00
253	375	1100	14
254	376	1111	17
255	377	1111	17

ROM PATTERN SPEC PAGE 1 OF 8

DEC PART NUMBI 23-012A2
ORIGINATOR: JOHN BENTON
DATE OF ORIGIN: 8-4-72

DECIMAL LOC	OCTAL LOC	BINARY DATA	OCTAL DATA
0	000	0011	03
1	001	0100	04
2	002	1000	10
3	003	0001	11
4	004	1111	17
5	005	0001	01
6	006	0001	01
7	007	0001	01
8	010	1000	10
9	011	1111	17
10	012	1000	10
11	013	1000	10
12	014	0011	03
13	015	0100	04
14	016	1000	10
15	017	1000	10
16	020	1000	10
17	021	1111	17
18	022	1000	10
19	023	1000	10
20	024	1000	10
21	025	1111	17
22	026	1000	10
23	027	1000	10
24	030	1000	10
25	031	1111	17
26	032	1000	10
27	033	0000	00
28	034	0011	03
29	035	0100	04
30	036	1000	10
31	037	1001	11
32	040	1111	17
33	041	0000	00
34	042	0000	00
35	043	0000	00

ROM PATTERN SPEC PAGE 2 OF 8

DEC PART NUMBI 23-012A2
ORIGINATOR: JOHN BENTON
DATE OF ORIGIN: 8-4-72

DECIMAL LOC	OCTAL LOC	BINARY DATA	OCTAL DATA
36	044	0000	00
37	045	1000	10
38	046	1111	17
39	047	1000	10
40	050	0111	07
41	051	1000	10
42	052	1000	10
43	053	1000	10
44	054	1111	17
45	055	0001	01
46	056	0000	00
47	057	0001	01
48	060	1000	10
49	061	1111	17
50	062	1000	10
51	063	1000	10
52	064	1111	17
53	065	0000	00
54	066	0000	00
55	067	0000	00
56	070	1111	17
57	071	0000	00
58	072	0000	00
59	073	0001	01
60	074	0011	03
61	075	0100	04
62	076	1000	10
63	077	1000	10
64	100	1000	10
65	101	1111	17
66	102	1000	10
67	103	0000	00
68	104	0011	03
69	105	0100	04
70	106	1000	10
71	107	1011	13

DEC PART NUMBI 23-012A2
ORIGINATOR: JOHN BENTON
DATE OF ORIGIN: 8-4-72

ROM PATTERN SPEC PAGE 3 OF 8

DECIMAL LOC	OCTAL LOC	BINARY DATA	OCTAL DATA
72	110	1000	10
73	111	1111	17
74	112	1000	10
75	113	0001	01
76	114	0100	04
77	115	1000	10
78	116	1000	10
79	117	1000	10
80	120	0000	00
81	121	0000	00
82	122	1000	10
83	123	1111	17
84	124	0111	07
85	125	1000	10
86	126	1000	10
87	127	1000	10
88	130	1111	17
89	131	0100	04
90	132	0010	02
91	133	0001	01
92	134	1111	17
93	135	0100	04
94	136	0011	03
95	137	0011	03
96	140	1100	14
97	141	0010	02
98	142	0001	01
99	143	0001	01
100	144	0000	00
101	145	0000	00
102	146	0000	00
103	147	1111	17
104	150	1100	14
105	151	1010	12
106	152	1001	11
107	153	1000	10

DEC PART NUMBI 23-012A2
ORIGINATOR: JOHN BENTON
DATE OF ORIGIN: 8-4-72

ROM PATTERN SPEC PAGE 4 OF 8

DECIMAL LOC	OCTAL LOC	BINARY DATA	OCTAL DATA
108	154	0000	00
109	155	1111	17
110	156	1000	10
111	157	1000	10
112	160	0000	00
113	161	0000	00
114	162	0000	00
115	163	0001	01
116	164	0000	00
117	165	1000	10
118	166	1000	10
119	167	1000	10
120	170	0000	00
121	171	0000	00
122	172	0000	00
123	173	0000	00
124	174	1000	10
125	175	1000	10
126	176	1000	10
127	177	1000	10
128	200	0000	00
129	201	0000	00
130	202	0000	00
131	203	0000	00
132	204	0000	00
133	205	0110	06
134	206	1001	11
135	207	1001	11
136	210	0000	00
137	211	1111	17
138	212	0100	04
139	213	1000	10
140	214	0000	00
141	215	0111	07
142	216	1000	10
143	217	1000	10

DEC PART NUMBI 23-012A2
ORIGINATORI JOHN BENTON
DATE OF ORIGINI 8-4-72

DECIMAL LOC	OCTAL LOC	BINARY DATA	OCTAL DATA
144	220	0000	00
145	221	0111	07
146	222	1000	10
147	223	1000	10
148	224	0000	00
149	225	0111	07
150	226	1001	11
151	227	1001	11
152	230	0000	00
153	231	0000	00
154	232	1111	17
155	233	0000	00
156	234	1000	10
157	235	0001	01
158	236	1010	12
159	237	1010	12
160	240	0000	00
161	241	1111	17
162	242	0000	00
163	243	0000	00
164	244	0000	00
165	245	0000	00
166	246	1000	10
167	247	1111	17
168	250	1000	10
169	251	0100	04
170	252	1000	10
171	253	1000	10
172	254	0000	00
173	255	1111	17
174	256	0001	01
175	257	0010	02
176	260	0000	00
177	261	0000	00
178	262	0111	07
179	263	1000	10

DEC PART NUMBI 23-012A2
ORIGINATORI JOHN BENTON
DATE OF ORIGINI 8-4-72

DECIMAL LOC	OCTAL LOC	BINARY DATA	OCTAL DATA
180	264	0000	00
181	265	1111	17
182	266	0000	00
183	267	1111	17
184	270	0000	00
185	271	1111	17
186	272	0000	00
187	273	0000	00
188	274	0000	00
189	275	0111	07
190	276	1000	10
191	277	1000	10
192	300	1000	10
193	301	1111	17
194	302	0001	01
195	303	0010	02
196	304	1000	10
197	305	0001	01
198	306	0010	02
199	307	0010	02
200	310	0000	00
201	311	1111	17
202	312	0001	01
203	313	0000	00
204	314	0000	00
205	315	0100	04
206	316	1001	11
207	317	1001	11
208	320	0000	00
209	321	0000	00
210	322	0111	07
211	323	1000	10
212	324	0000	00
213	325	0111	07
214	326	1000	10
215	327	1000	10

DEC PART NUMBI 23-012A2
ORIGINATORI JOHN BENTON
DATE OF ORIGINI 8-4-72

DECIMAL LOC	OCTAL LOC	BINARY DATA	OCTAL DATA
216	330	0000	00
217	331	0011	03
218	332	0100	04
219	333	1000	10
220	334	0000	00
221	335	0111	07
222	336	1000	10
223	337	0111	07
224	340	0000	00
225	341	1100	14
226	342	0010	02
227	343	0001	01
228	344	1000	10
229	345	0001	01
230	346	1010	12
231	347	1010	12
232	350	0000	00
233	351	1100	14
234	352	1010	12
235	353	1001	11
236	354	0000	00
237	355	0001	01
238	356	0110	06
239	357	1000	10
240	360	0000	00
241	361	0000	00
242	362	1110	16
243	363	0000	00
244	364	0000	00
245	365	1000	10
246	366	1000	10
247	367	1000	10
248	370	0000	00
249	371	0001	01
250	372	0000	00
251	373	0000	00

DEC PART NUMBI 23-012A2
ORIGINATORI JOHN BENTON
DATE OF ORIGINI 8-4-72

DECIMAL LOC	OCTAL LOC	BINARY DATA	OCTAL DATA
252	374	0000	00
253	375	1111	17
254	376	1111	17
255	377	1111	17

PAGE REVISION CONTROL SHEET

NO.	PAGE REVISIONS	REMARKS
1	*	
2	*	
3	*	
4	*	(ASL)
5	*	(BCL)
6	*	(PCC)
7	*	(VC1)
8	*	(VC2)
9	*	(LEI)
10	*	(BRL)
11	*	(BDL)

ECO NO.	—
PTCH REV.	A
ENG.	—
DATE	—

FIRST USED ON OPTION/MODEL

DRN. D. Caunter	DATE 11-6-72	digital EQUIPMENT CORPORATION MAYNARD MASSACHUSETTS
CHK'D. Phil Read	DATE 11/9/72	
ENG. B Quinn	DATE 11/9/72	TITLE: BUS CONTROL & BOOTSTRAP
PROJ. ENG. H E Lowell	DATE 11/9/72	
PROD. P T McCarthy	DATE 11/9/72	
NEXT HIGHER ASSY. B-DD-GT40-0		SIZE B · CODE CS · NUMBER M7014-0-1 · REV. *
SCALE —		
SHEET 1 OF 11		DIST.

"THIS DRAWING AND SPECIFICATIONS, HEREIN, ARE THE PROPERTY OF DIGITAL EQUIPMENT CORPORATION AND SHALL NOT BE REPRODUCED OR COPIED OR USED IN WHOLE OR IN PART AS THE BASIS FOR THE MANUFACTURE OR SALE OF ITEMS WITHOUT WRITTEN PERMISSION.
COPYRIGHT © DIGITAL EQUIPMENT CORPORATION"

This drawing and specifications, herein, are the property of Digital Equipment Corporation and shall not be reproduced or copied or used in whole or in part as the basis for the manufacture or sale of items without written permission. 10-2-72

THIS DOCUMENT CONTAINS CONFIDENTIAL PROPRIETARY INFORMATION OF DEC. THIS INFORMATION SHALL NOT BE DISCLOSED TO PERSONS OUTSIDE THE EMPLOY OF DEC, EXCEPT BY DEC PERSONNEL SO AUTHORIZED BY DEC, AND ONLY FOR USE BY SUCH OTHER PERSONS IN THE DESIGN, PRODUCTION AND MANUFACTURE OF PRODUCTS FOR DEC.

NOTES:

JUMPERS ☐ INSERT

EDGE CUTOFF	BOOTSTRAP ROM SELECT 162	VECTOR INTERRUPT	INTENSITY DELAY	CHARACTER SPACING	INT CLOCK	ADDRESS SELECT	
W1 = 1024 UNITS	W26 = DIS. 1	W8 = D08	W21 = 550 NS	W4 = 72 CHAR 29 LINES	W24 = INT.	W11 = A12	W18 = A05
W2 = 768 UNITS	W27 = ENA. 1	W7 = D07	W20 = 600 NS	W3 = 86 CHAR 32 LINES	W25 = EXT.	W13 = A09	W14 = A04
	W28 = ENA 2	W10 = D06	W23 = 700 NS	W5 = 72 CHAR 32 LINES		W16 = A08	W12 = A03
	W29 = DIS. 2	W15 = D05	W22 = 1000 NS	W6 = 86 CHAR 29 LINES		W19 = A07	
		W9 = D04				W17 = A06	

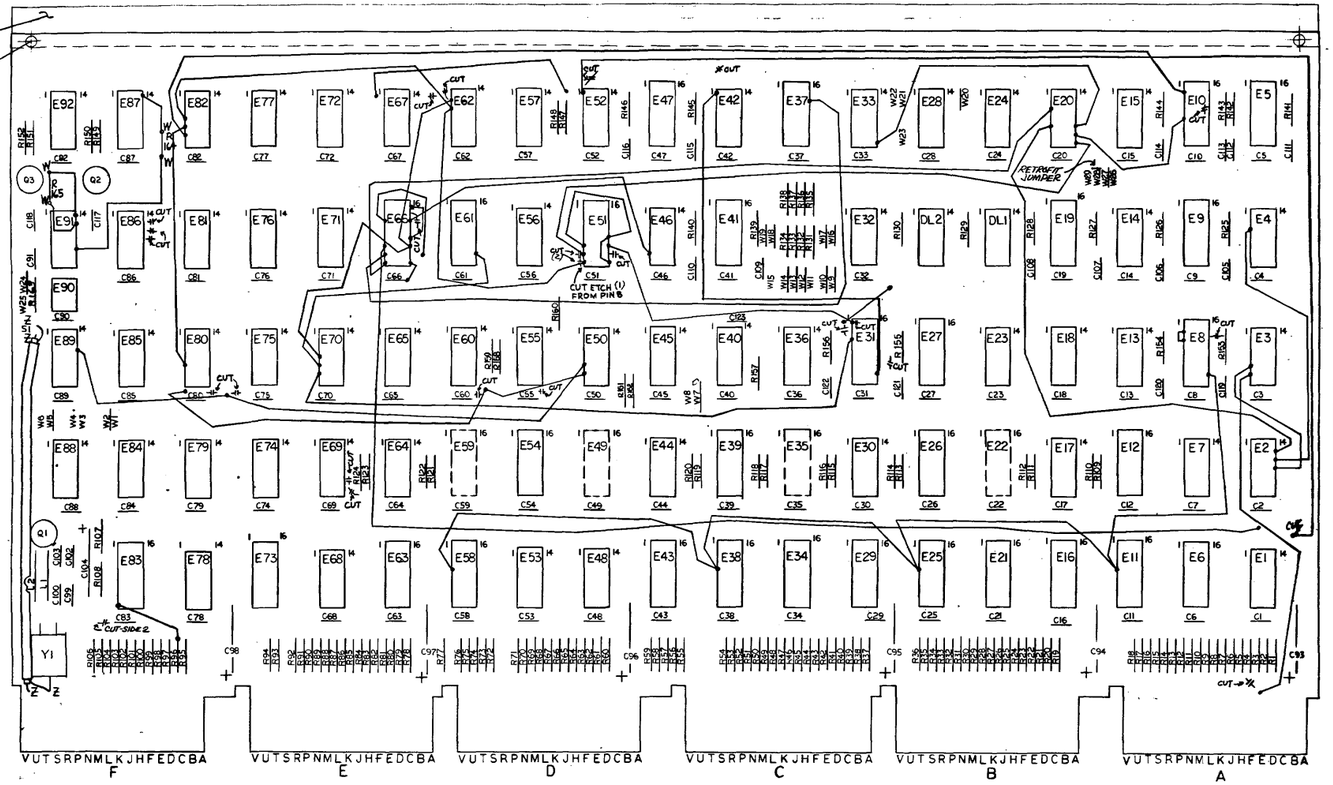

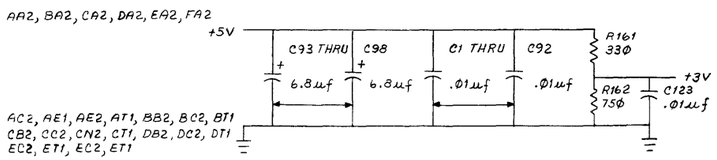

8838	8	16
75451	4	8
74193	8	16
74157	8	16
7496	12	5
7476	13	5
5603	8	16
2602	8	16
380	1	8
314	1	8
IC TYPE	GND	+ 5V
GND AND 5V ARE USUALLY PIN 7 AND 14 RESPECTIVELY EXCEPTIONS ARE STATED ABOVE		
IC PIN LOCATIONS		

BRUNING 40-522 1669P

DEC FORM NO. DRD-135A

REF			
REF		X-Y COORDINATE HOLE LOCATION	K-CO-M7014-B-4	1
REF		ASSY/DRILLING HOLE LAYOUT	A-AH-M7014-B-5	2
REF		MODULE ECO HISTORY	B-MH-M7014-B-6	3
1		ETCHED CIRCUIT BOARD	5010129	4
10	C100,C103,C106,C107,C109, ,C112, ,C115,C119, C121,C122	CAP 10PF 5% 100V DM	1000006	5
2	C102,C110	CAP 100PF 5% 100V DM	1000016	6
4	C105,C108,C120,C111	CAP 330PF 5% 100V DM	1000023	7
2	C117,C118	CAP 560PF 5% 100V DM	1000025	8
6	C93 THRU C98	CAP 6.8UF 20% 35V TANT	1000067	9
4	C99,C114,C116,C123	CAP .01UF 20% 100V	1001610-01	10
1	C104	CAP 1 5UF 10% 20V	1004812	11
91	C1 THRU C72,C74 THRU C92	CAP .22UF 80% 20V	1010274	12
1	R161	RES 330 5% 1/4W	1300295	13
56	R1,R3,R5,R7,R9,R12,R13, R16,R17,R19,R22,R23,R25, R28,R30,R32,R34,R36,R37, R40,R41,R44,R45,R48,R50, R52,R54,R55,R57,R59,R62, R63,R65,R67,R69,R72,R74 R75,R77,R80,R81,R83,R86, R87,R89,R92,R93,R96,R99, R101,R103,,R105,R147,R150, R151,R158	RES 390 5% 1/4W	1300309	14
27	R109,THRU R124,R131 THRU R138,R157,R164,R165	RES 1K 5% 1/4W	1300365	15
8	R126,R127,R139,R142, R145,R153,R155,R156	RES 4.7K 5% 1/4W	1300447	16
61	R2,R4,R6,R8,R10,R11,R14, R15,R18,R20,R21,R24,R26, R27,R29,R31,R33,R35,R38, R39,R42,R43,R46,R47,R49, R51,R53,R56,R58,R60,R61, R64,R66,R68,R70,R71,R73, R76,R78,R79,R82,R84,R85, R88,R90,R91,R94,R95,R97, R98,R100,R102,R104,R106, R129,R130,R148,R149,R152, R159,R160,	RES 180 5% 1/4W	1301322	17
1	R162	RES 750 5% 1/4W	1301401	18
5	R128,R140,R141,R143, R154	RES 22K 5% 1/4W	1301808	19
1	R107	RES 270 5% 1/4W	1301972	20
1	R108	RES 100K 5% 1/4W	1302486	21
2	Q2,Q3	TRANS. DEC 3009B	1503100	22
1	Q1	TRANS. 2N5245	1509681	23
1	L2	COIL 2.2MH	1602912	24
1	L1	COIL 2.2UH	1609620	25
2	DL1,DL2	DELAY LINE L1842	1611197	26
1	Y1	CRYSTAL 20.0 MC	1809880-0	27
3	E28,E42,E77	IC DEC 7474	1905547	28
11	E2,E14,E15,E57,E70,E71,E72, E75,E80,E82,E89	IC DEC 7400	1905575	29
1	E13	IC DEC 7410	1905576	30
1	E68	IC DEC 7453	1905582	31
4	E37,E51,E61,E66	IC DEC 7476	1905585	32
13	E4,E7,E32,E33,E46,E62,E67, E74,E78,E79,E85,E86,E88	IC DEC 7402	1909004	33
2	E40,E56	IC DEC 74H21	1909058	34
2	E1,E55	IC DEC 380	1909485	35
7	E3,E18,E50,E60,E69,E76,E84	IC DEC 7404	1909686	36
1	E48	IC DEC 314	1909704	37
11	E17,E30,E44,E45,E52,E53, E64, E65,E87,E91,E92	IC DEC 8881	1909705	38
2	R144,R146	RES 6.8K 5% 1/4W	1301423	39
QTY	REF DESIGNATION	DESCRIPTION	PART NO.	ITEM NO.

PARTS LIST

FIRST USED ON OPTION MODEL: GT40

ETCH BOARD REV: B

REV	CHANGE NO.			
			2N5245	SAME
			DEC. 3009B	2N3646
CHK	DEC NO.	EIA NO.	DEC NO.	EIA NO.

SEMICONDUCTOR CONVERSION CHART

DRN. G. Wrinn 10-2-72
CHK'D. Lin Wood 10/2/72
ENG. R. Gumm 10/2/72
MGR ENG. 11/2/72
PROD. 11/2/72

NEXT HIGHER ASSY: B-DD-GT40-0

SCALE: —

SHEET 2 OF

digital EQUIPMENT CORPORATION MAYNARD, MASSACHUSETTS

TITLE: BUS CONTROL & BOOTSTRAP

SIZE D | CODE DCS | NUMBER M7014-0-1 | REV. A

DIST.

This drawing and specifications, herein, are the property of Digital Equipment Corporation and shall not be reproduced or copied or used in whole or in part as the basis for the manufacture or sale of items without written permission.

NOTES:

QTY	REF DESIGNATION	DESCRIPTION	PART NO.	ITEM NO.
2	E23,E36	IC DEC 8242	1909712	39
4	E11,E25,E38,E58	IC DEC 74193	1910018	40
1	E20	IC DEC 7437	1910091	41
1	E19	IC DEC 2602	1910257	42
1	E27	IC DEC 7496	1910363	43
1	E90	IC DEC 75451	1910406	44
7	E5,E8,E9,E10,E31,E41,E47	IC DEC 74123	1910436	45
1	E83	IC DEC 74157	1910655	46
1	E24	IC DEC 7427	1910878	47
7	E6,E16,E21,E29,E34,E43, E63	IC DEC 8838 OR LM331	1911117	48
1	E12	IC DEC IM5603 OR 74187	23016A2	49
1	E54	IC DEC IM5603 OR 74187	23017A2	50
1	E39	IC DEC IM5603 OR 74187	23018A2	51
1	E26	IC DEC IM5603 OR 74187	23019A2	52
4	E22,E35,E49,E59	IC DEC IM5603 OR 74187 (OPTIONAL)		53
1	E81	IC DEC 74H74	1909667	54
1	E73	PRIORITY JUMPER (LEVEL) PLUG	5408776	55
12		EYELET GS-4-7	9006732	56
A/R		INSULATED JUMPER L-2007-1	9009185	57
1		COAX CABLE RG174U 6 IN. LG	9107530	58
1		HANDLE ASSY MODULE	1210711-2	59
REF		BOOT STRAP ROM PATTERNS	K-RL-M7Ø14-Ø-8	60
1	C113	CAP 120 PF 5% 100V	1000018	61
1	R163	RES 47 OHM 5% 1/4 W	1300202	62
1	R125	RES 68 K OHM 5% 1/4 W	1301327	63

PARTS LIST

FIRST USED ON OPTION MODEL: GT4Ø

ETCH BOARD REV: B

IC TYPE	GND	+ 5V

GND AND 5V ARE USUALLY PIN 7 AND 14 RESPECTIVELY EXCEPTIONS ARE STATED ABOVE

IC PIN LOCATIONS

REV	CHANGE NO.	REVISIONS	DEC NO.	EIA NO.	DEC NO.	EIA NO.
CHK						

SEMICONDUCTOR CONVERSION CHART

DRN. DATE 11-6-72
CHK'D. DATE 11/3
ENG. DATE
PROJ. ENG. DATE 11/9/72
PROD. DATE

NEXT HIGHER ASSY: B-DD-GT4Ø-Ø

SCALE

SHEET 3 OF

digital EQUIPMENT CORPORATION MAYNARD MASSACHUSETTS

TITLE: BUS CONTROL & BOOTSTRAP

SIZE D CODE CS NUMBER M7Ø14-Ø-1 REV. A

DIST.

SIZE D CODE CS NUMBER M7Ø14-Ø-1 REV A

DRAWING 40-522 16699

This drawing and specifications, herein, are the property of Digital Equipment Corporation and shall not be reproduced or copied or used in whole or in part as the basis for the manufacture or sale of items without written permission. NOV 1972

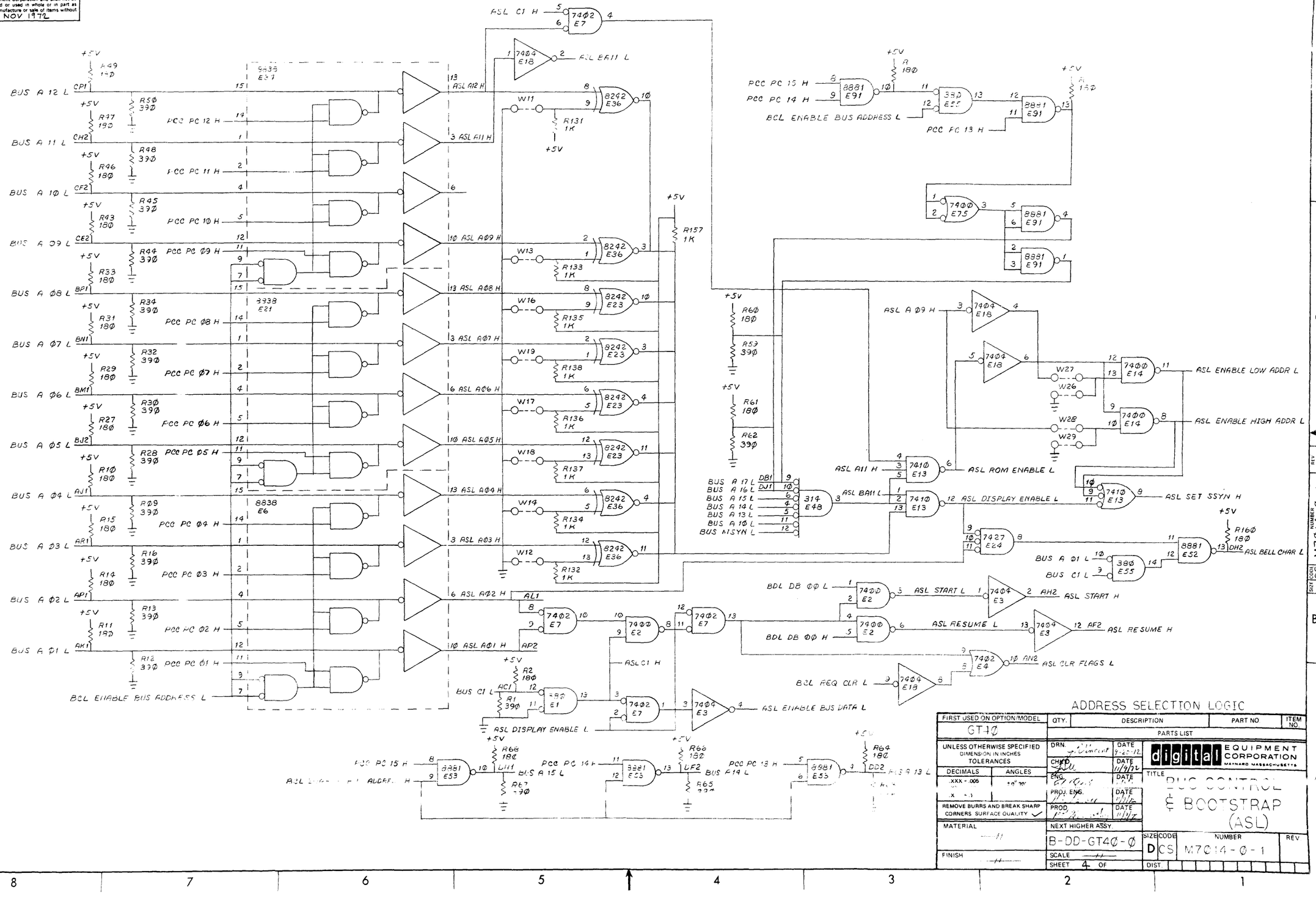

ADDRESS SELECTION LOGIC

FIRST USED ON OPTION/MODEL	QTY.	DESCRIPTION	PART NO	ITEM NO
GT40		PARTS LIST		

UNLESS OTHERWISE SPECIFIED DIMENSION IN INCHES TOLERANCES
DECIMALS .XXX ± .005 .X ± .1 ANGLES ±0° 30'
REMOVE BURRS AND BREAK SHARP CORNERS SURFACE QUALITY ✓
MATERIAL —
FINISH —

DRN. J. Vincent DATE 9-25-72
CHKD. DATE 11/9/72
ENG. DATE
PROJ. ENG. DATE 11/16
PROD. DATE 11/17

digital EQUIPMENT CORPORATION MAYNARD MASSACHUSETTS

TITLE: BUS CONTROL & BOOTSTRAP (ASL)

NEXT HIGHER ASSY: B-DD-GT40-0
SIZE D CODE CS NUMBER M7014-0-1 REV
SCALE —
SHEET 4 OF
DIST

REVISIONS	REV	CHANGE NO	CHK

BRUNING 40-522 1584
DEC-DRW NO ORD 102-B

This drawing and specifications, herein, are the property of Digital Equipment Corporation and shall not be reproduced or copied or used in whole or in part as the basis for the manufacture or sale of items without written permission. NOV 1972

BCL BR REQ (Ø) H
BCL INTERRUPT L
BCL SET TIME OUT L
BCL BR REQ (1) H
BCL BR L
BCL NPR REQ (1) H
BUS NPR L
BUS SACK L
BUS BBSY L
BCL MINE L
TD NPR REQ (Ø) H
BCL BR REQ (Ø) H
BCL NPR REQ (1) H
BUS NPG OUT H
BCL BR REQ (1) H
BUS NPG IN H
BCL BG IN H
Q2 DEC 3ØØ9B
Q3 DEC 3ØØ9B
BCL BG OUT H
BUS SSYN L
BCL SSYN H
BUS BBSY L
BCL BUSY H
BUS INIT L
BCL INIT H
BCL TIME OUT (1) L
BCL INIT L
AE1 BCL TIME OUT + INIT L

TD NPR REQ (Ø) H
BCL NPR REQ (Ø) L
BCL ENABLE BUS ADDRESS H
BCL ENABLE BUS ADDRESS L
BCL MINE L
TD NPR REQ (Ø) H
BCL MSYN (1) H
BUS MSYN L
BUS COL
GM INTERRUPT H
BCL INTERRUPT L
BUS DCLO
BCL INTR DONE H
BCL TIME OUT 1 H
BCL DATA CLR H
BCL REQ CLR L
CSC SHIFT INTR L
BCL TIME OUT (1) H
TD NPR REQ (Ø) H
BCL SET TIME OUT L
BUS ACLO
BCL MSYN (1) H
BCL TIME OUT (1) L
BCL DATA CLR L
BUS A ØØ L
TD LOAD PULSE H
BCL CLR TIME OUT H
BCL INIT H
BCL DATA CLR H
BUS BR 4 L
BUS BR 5 L
BUS BR 6 L
BUS BR 7 L
PRIORITY JUMPER E73
BCL BR L
BCL BG OUT H
BCL BG IN H
BUS BG 4 OUT H
BUS BG 5 OUT H
BUS BG 6 OUT H
BUS BG 7 OUT H
BUS BG 4 IN H
BUS BG 5 IN H
BUS BG 6 IN H
BUS BG 7 IN H
BCL INTR DONE H
BCL TIME OUT (1) L
BCL CLR TIME OUT H
BRL INTR H
BCL SSYN H
BCL DATA RDY H
BCL 1SYN (1) H
ASL SET SSYN H
BUS SSYN L

BUS CONTROL LOGIC

FIRST USED ON OPTION/MODEL	QTY.	DESCRIPTION	PART NO.	ITEM NO.
GT4Ø		PARTS LIST		

UNLESS OTHERWISE SPECIFIED DIMENSION IN INCHES. TOLERANCES
DECIMALS .XXX = .005 .XX = .02 .X = .1 ANGLES ±0° 30'
REMOVE BURRS AND BREAK SHARP CORNERS SURFACE QUALITY ✓
MATERIAL —
FINISH —

DRN. J. Vincent	DATE 9-25-72	digital EQUIPMENT CORPORATION MAYNARD MASSACHUSETTS
CHK.	DATE 11/9/72	
ENG.	DATE	TITLE: BUS CONTROL & BOOTSTRAP (BCL)
PROJ. ENG.	DATE	
PROD.	DATE 11/6/72	
NEXT HIGHER ASSY. B-DD-GT4Ø-Ø		SIZE D CODE CS NUMBER M7Ø14-Ø-1 REV. A
SCALE —		
SHEET 5 OF		DIST.

REVISIONS | REV | CHANGE NO | CHK
BRUNING 40-522 15840
DEC FORM NO DRD 102-B

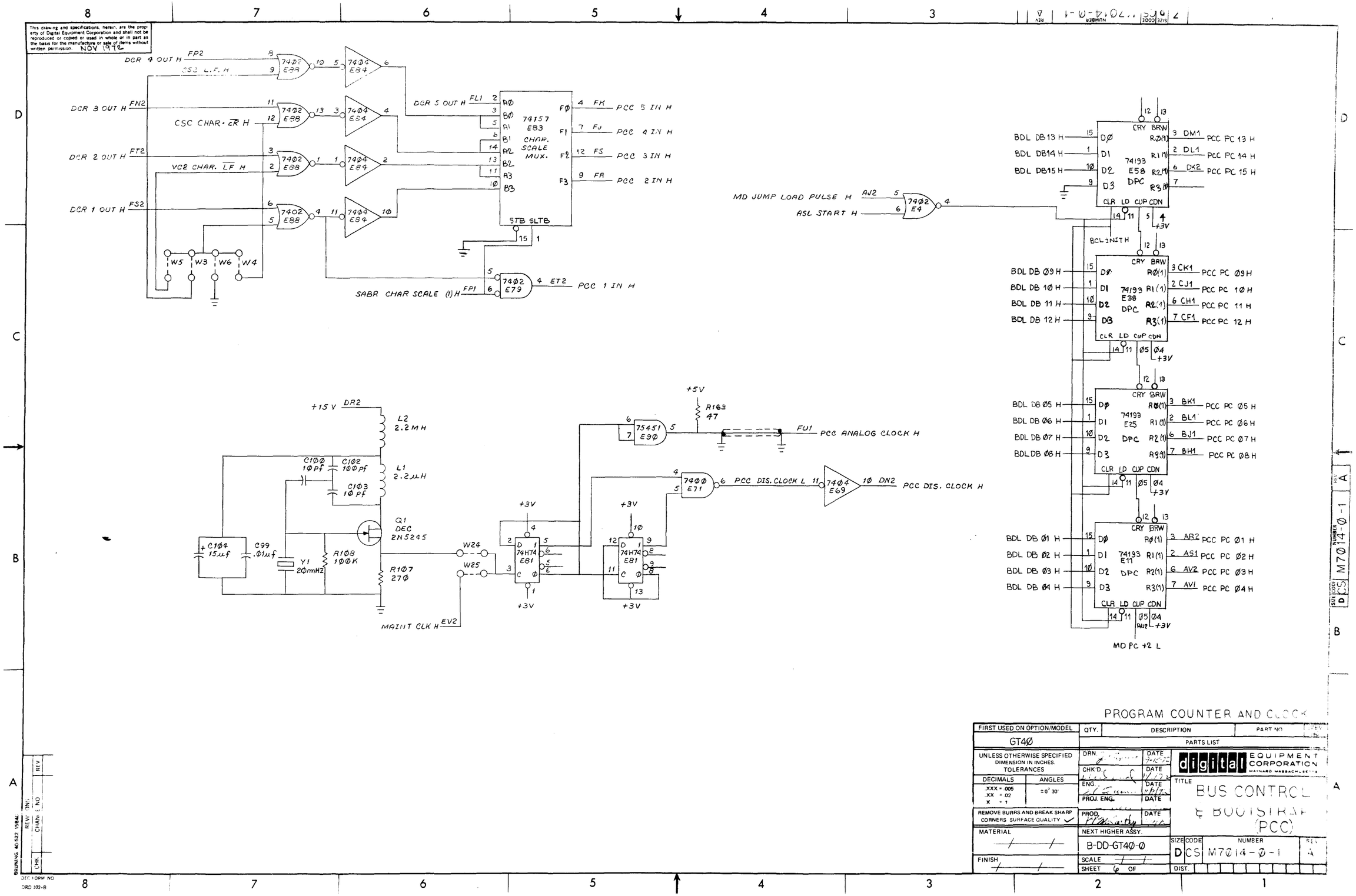

This drawing and specifications, herein, are the property of Digital Equipment Corporation and shall not be reproduced or copied or used in whole or in part as the basis for the manufacture or sale of items without written permission. NOV 1972
DCR 4 OUT H FP2
CSC L.F. H
DCR 3 OUT H FN2
CSC CHAR. CR H
DCR 2 OUT H FT2
VC2 CHAR. LF H
DCR 1 OUT H FS2
W5 W3 W6 W4
DCR 5 OUT H FL1
74157 E83 CHAR. SCALE MUX.
STB SLTB
PCC 5 IN H
PCC 4 IN H
PCC 3 IN H
PCC 2 IN H
SABR CHAR SCALE (1) H FP1
PCC 1 IN H
MD JUMP LOAD PULSE H AJ2
ASL START H
74193 E58 DPC
74193 E38 DPC
74193 E25 DPC
74193 E11 DPC
BCL INIT H
BDL DB 13 H
BDL DB 14 H
BDL DB 15 H
BDL DB Ø9 H
BDL DB 1Ø H
BDL DB 11 H
BDL DB 12 H
BDL DB Ø5 H
BDL DB Ø6 H
BDL DB Ø7 H
BDL DB Ø8 H
BDL DB Ø1 H
BDL DB Ø2 H
BDL DB Ø3 H
BDL DB Ø4 H
PCC PC 13 H
PCC PC 14 H
PCC PC 15 H
PCC PC Ø9 H
PCC PC 1Ø H
PCC PC 11 H
PCC PC 12 H
PCC PC Ø5 H
PCC PC Ø6 H
PCC PC Ø7 H
PCC PC Ø8 H
PCC PC Ø1 H
PCC PC Ø2 H
PCC PC Ø3 H
PCC PC Ø4 H
MD PC +2 L
+15 V DR2
L2 2.2 MH
L1 2.2 µH
C1ØØ 1Ø pf
C1Ø2 1ØØ pf
C1Ø3 1Ø pf
Q1 DEC 2N5245
C1Ø4 15 µf
C99 .Ø1 µf
Y1 2Ø mHz
R1Ø8 1ØØK
R1Ø7 27Ø
W24
W25
MAINT CLK H EV2
74H74 E81
+3V
+5V
R163 47
75451 E9Ø
FU1 PCC ANALOG CLOCK H
74ØØ E71
PCC DIS. CLOCK L
74Ø4 E69
DN2 PCC DIS. CLOCK H
PROGRAM COUNTER AND CLOCK
FIRST USED ON OPTION/MODEL
GT4Ø
QTY. DESCRIPTION PART NO
PARTS LIST
UNLESS OTHERWISE SPECIFIED DIMENSION IN INCHES. TOLERANCES
DECIMALS .XXX ± .005 .XX ± .02 X ± .1
ANGLES ±0° 30'
REMOVE BURRS AND BREAK SHARP CORNERS SURFACE QUALITY
MATERIAL
FINISH
DRN. DATE
CHK'D. DATE
ENG. DATE
PROJ. ENG. DATE
PROD. DATE
NEXT HIGHER ASSY. B-DD-GT4Ø-Ø
SCALE
SHEET 6 OF
digital EQUIPMENT CORPORATION MAYNARD MASSACHUSETTS
TITLE BUS CONTROL & BOOTSTRAP (PCC)
SIZE D CODE CS NUMBER M7Ø14-Ø-1 REV A
DIST.
BRUNING 40-522 15840
DEC FORM NO DRD 102-B

This drawing and specifications, herein, are the property of Digital Equipment Corporation and shall not be reproduced or copied or used in whole or in part as the basis for the manufacture or sale of items without written permission. NOV 1972

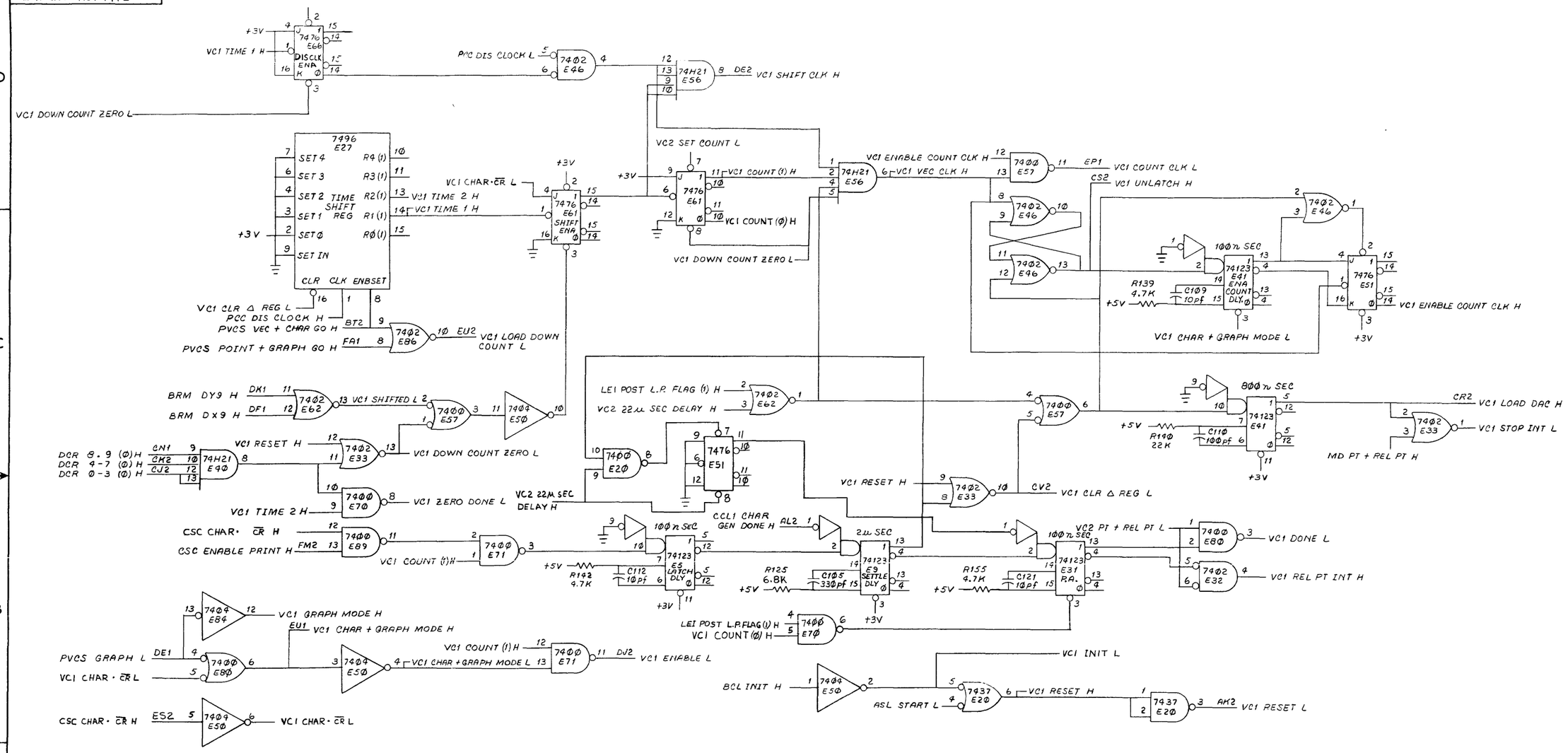

VECTOR CONTROL 1

FIRST USED ON OPTION/MODEL	QTY.	DESCRIPTION	PART NO.	ITEM NO.
GT4Ø		PARTS LIST		

UNLESS OTHERWISE SPECIFIED DIMENSION IN INCHES. TOLERANCES

DECIMALS	ANGLES
.XXX = .005	±0° 30'
.XX = .02	
.X = .1	

REMOVE BURRS AND BREAK SHARP CORNERS SURFACE QUALITY ✓

MATERIAL —//—

FINISH —//—

DRN. DATE 9-12-72
CHK'D DATE 11/4/72
ENG. DATE 11/4/72
PROJ. ENG. DATE
PROD. DATE

NEXT HIGHER ASSY. B-DD-GT4Ø-Ø

SCALE —//—

SHEET 7 OF

digital EQUIPMENT CORPORATION MAYNARD MASSACHUSETTS

TITLE BUS CONTROL & BOOTSTRAP (VC1)

SIZE	CODE	NUMBER	REV.
D	CS	M7Ø14-Ø-1	A

DIST.

REVISIONS | CHANGE NO. | REV | CHK

BRUNING 40-522 15840

DEC FORM NO DRD 102-B

This drawing and specifications, herein, are the property of Digital Equipment Corporation and shall not be reproduced or copied or used in whole or in part as the basis for the manufacture or sale of items without written permission. NOV 1972

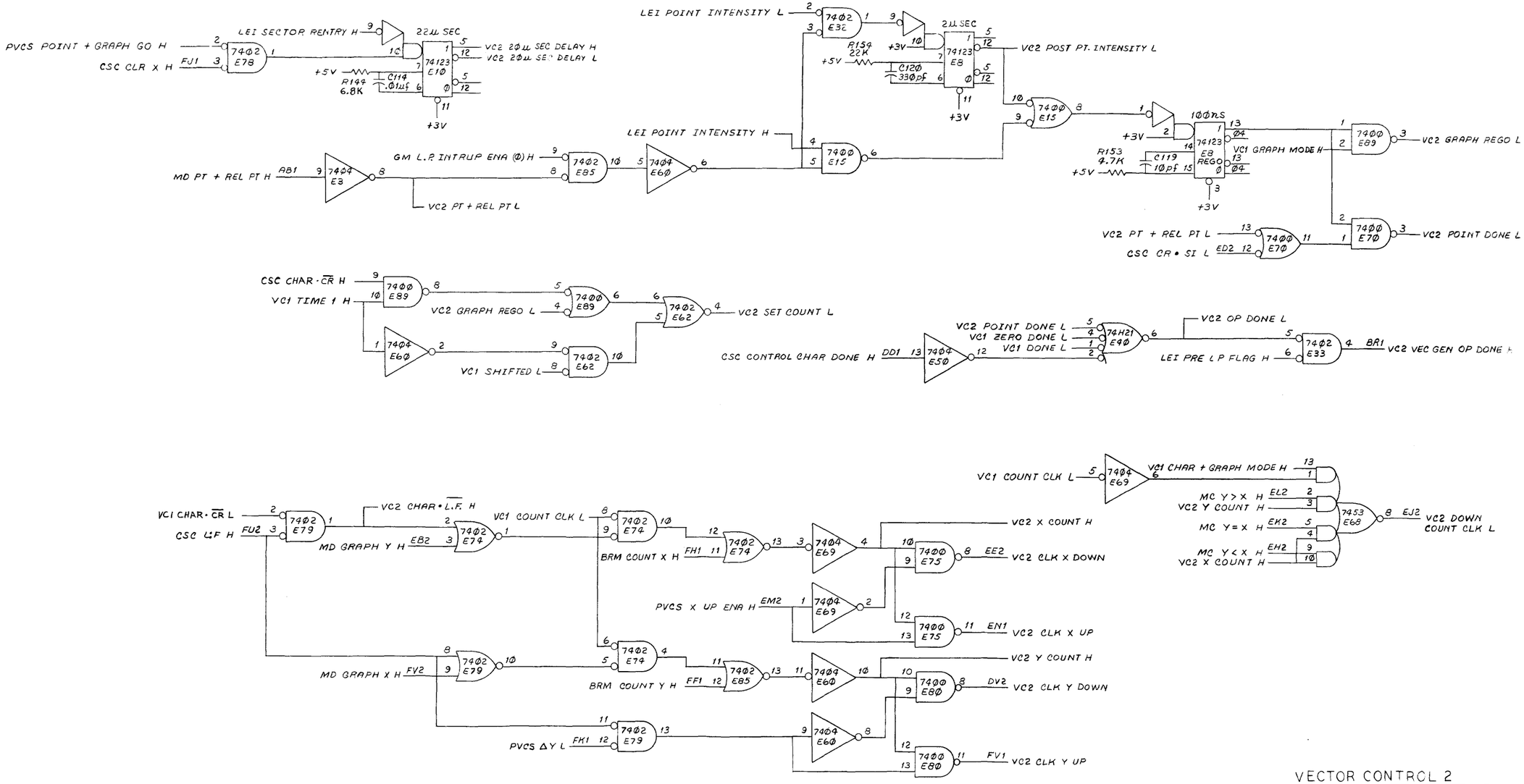

VECTOR CONTROL 2

FIRST USED ON OPTION/MODEL	QTY.	DESCRIPTION	PART NO
GT40		PARTS LIST	

UNLESS OTHERWISE SPECIFIED DIMENSION IN INCHES. TOLERANCES
DECIMALS: .XXX = .005, .XX = .02, X = 1 — ANGLES: ±0° 30'
REMOVE BURRS AND BREAK SHARP CORNERS SURFACE QUALITY ✓
MATERIAL —
FINISH —

DRN. J. Vincent DATE 9-11-72
CHK'D Dave Rand DATE 11/17/72
ENG. Al Cini DATE 11/17/72
PROJ. ENG. DATE
PROD. T. McCarthy DATE 11/9/72

digital EQUIPMENT CORPORATION MAYNARD, MASSACHUSETTS

TITLE: BUS CONTROL & BOOTSTRAP (VC2)

NEXT HIGHER ASSY: B-DD-GT40-0
SCALE —
SHEET 8 OF

SIZE D | CODE DCS | NUMBER M7014-0-1 | REV A
DIST

REVISIONS: REV | CHANGE NO | CHK | DATE | BY
BRUNNING 40-522 (1984)
DEC FORM NO 12RD 102-B

REV A | NUMBER M7014-0-1 | SIZE D | CODE DCS

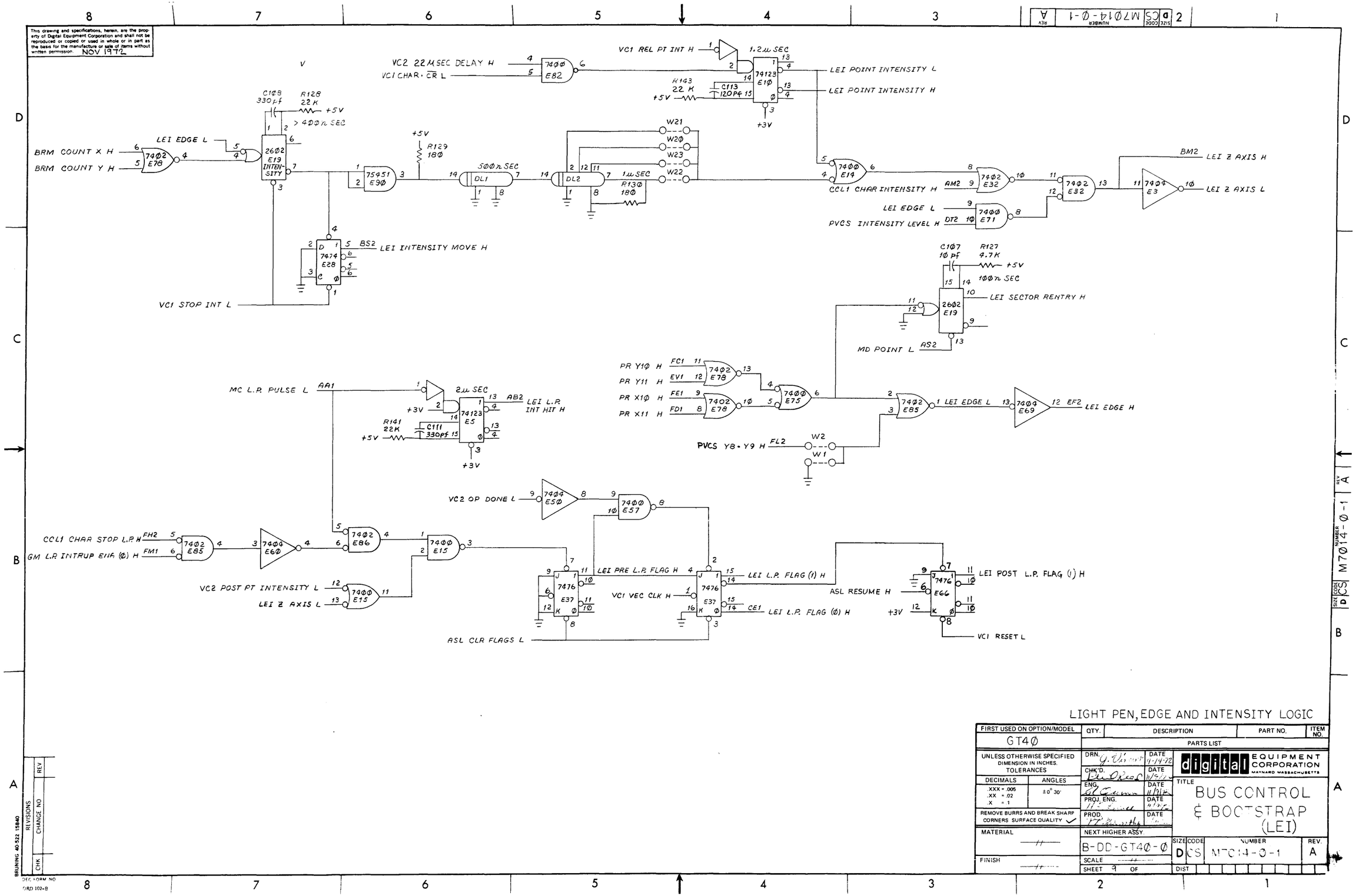

LIGHT PEN, EDGE AND INTENSITY LOGIC

FIRST USED ON OPTION/MODEL	QTY.	DESCRIPTION	PART NO.	ITEM NO.
GT40		PARTS LIST		

UNLESS OTHERWISE SPECIFIED DIMENSION IN INCHES. TOLERANCES

DECIMALS	ANGLES
.XXX = .005	±0° 30'
.XX = .02	
.X = .1	

REMOVE BURRS AND BREAK SHARP CORNERS SURFACE QUALITY ✓

MATERIAL —//—

FINISH —//—

DRN. G. Vincent DATE 9-14-72
CHK'D. [signature] DATE 11/9/72
ENG. [signature] DATE 11/9/72
PROJ. ENG. [signature] DATE 11/9/72
PROD. [signature] DATE

digital EQUIPMENT CORPORATION MAYNARD MASSACHUSETTS

TITLE BUS CONTROL & BOOTSTRAP (LEI)

NEXT HIGHER ASSY. B-DD-GT40-0

SCALE —//—

SHEET 9 OF

SIZE	CODE	NUMBER	REV.
D	CS	M7014-0-1	A

DIST

REVISIONS: REV | CHANGE NO | CHK

BRUNING 40-522 15840

DEC FORM NO ORD 102-B

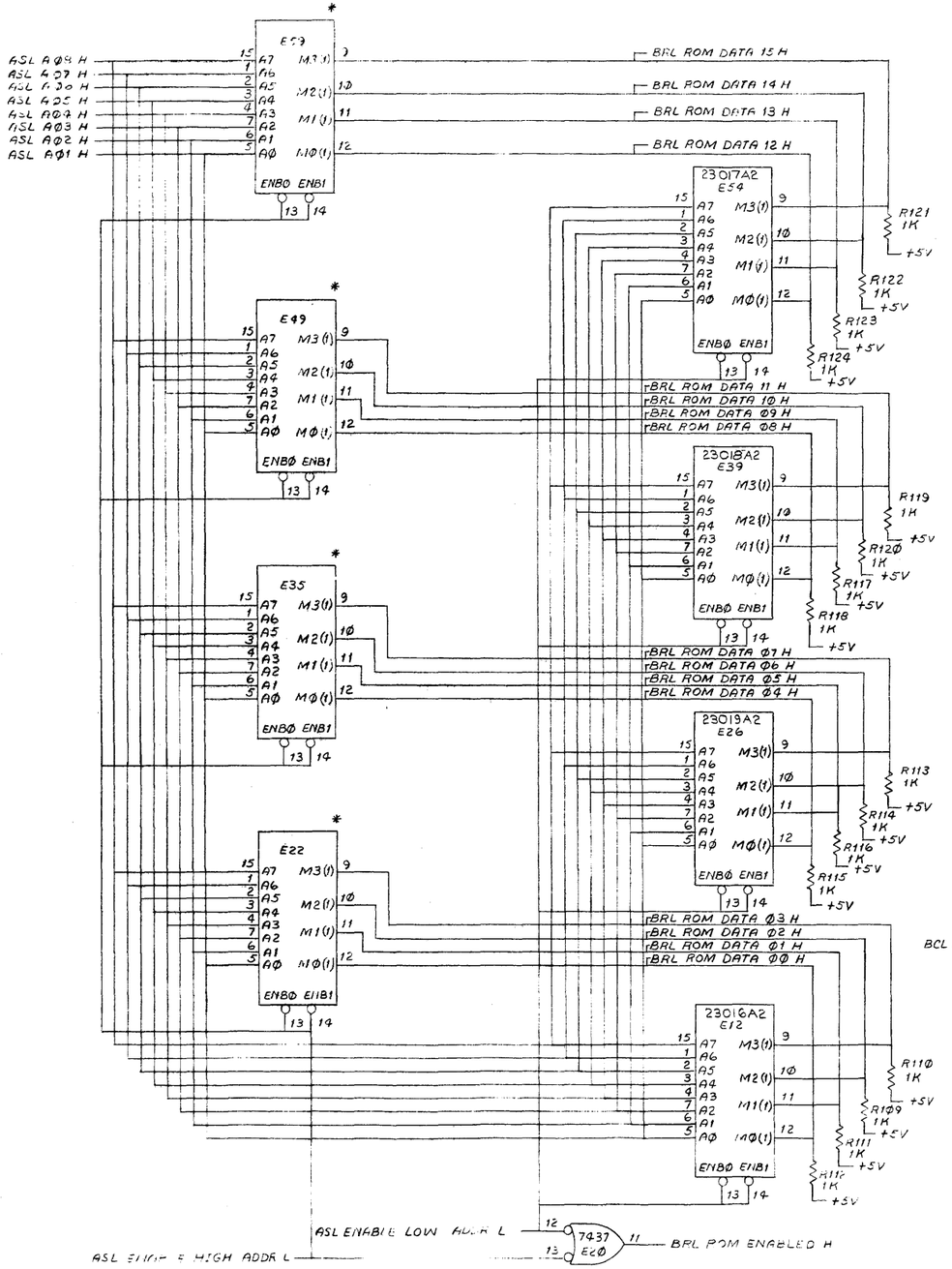

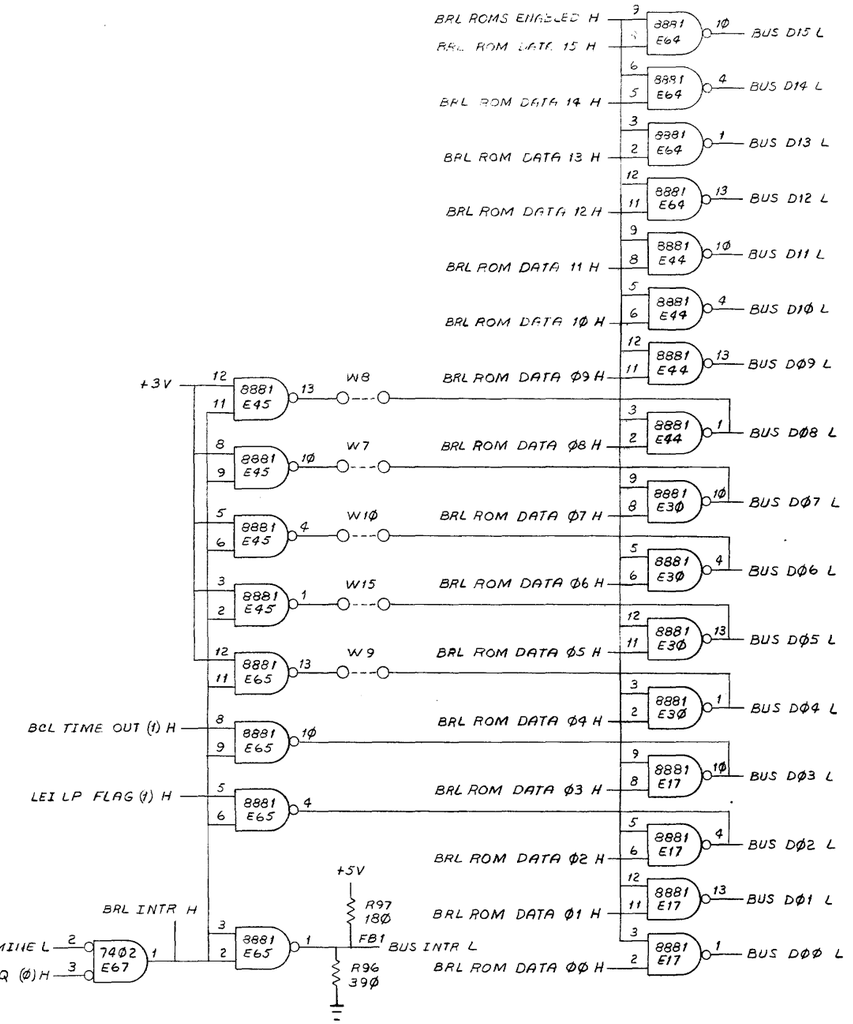

BOOTSTRAP ROM LOGIC

FIRST USED ON OPTION/MODEL	QTY.	DESCRIPTION	PART NO.	ITEM NO.
GT4Ø		PARTS LIST		

UNLESS OTHERWISE SPECIFIED DIMENSION IN INCHES. TOLERANCES
DECIMALS .XXX = .005 .XX = .02 ANGLES ±0° 30
REMOVE BURRS AND BREAK SHARP CORNERS SURFACE QUALITY ✓
MATERIAL
FINISH

DRN. DATE 9-7-72
CHK'D DATE
ENG. DATE
PROJ ENG. DATE
PROD. DATE
NEXT HIGHER ASSY B-DD-GT4Ø-Ø

digital EQUIPMENT CORPORATION MAYNARD MASSACHUSETTS

TITLE BUS CONTROL & BOOTSTRAP (BRL)

SIZE D CODE CS NUMBER M7Ø14-Ø-1 REV
SCALE
SHEET 1Ø OF
DIST

REVISIONS: REV / DESCRIPTION / CHK / DATE / APPROVED
REV. CHANGE NO.

BRUNING 40-522 15840
DEC 10-DRW-NO
ORD 102-B

This drawing and specifications, herein, are the property of Digital Equipment Corporation and shall not be reproduced or copied or used in whole or in part as the basis for the manufacture or sale of items without written permission. NOV. 1972

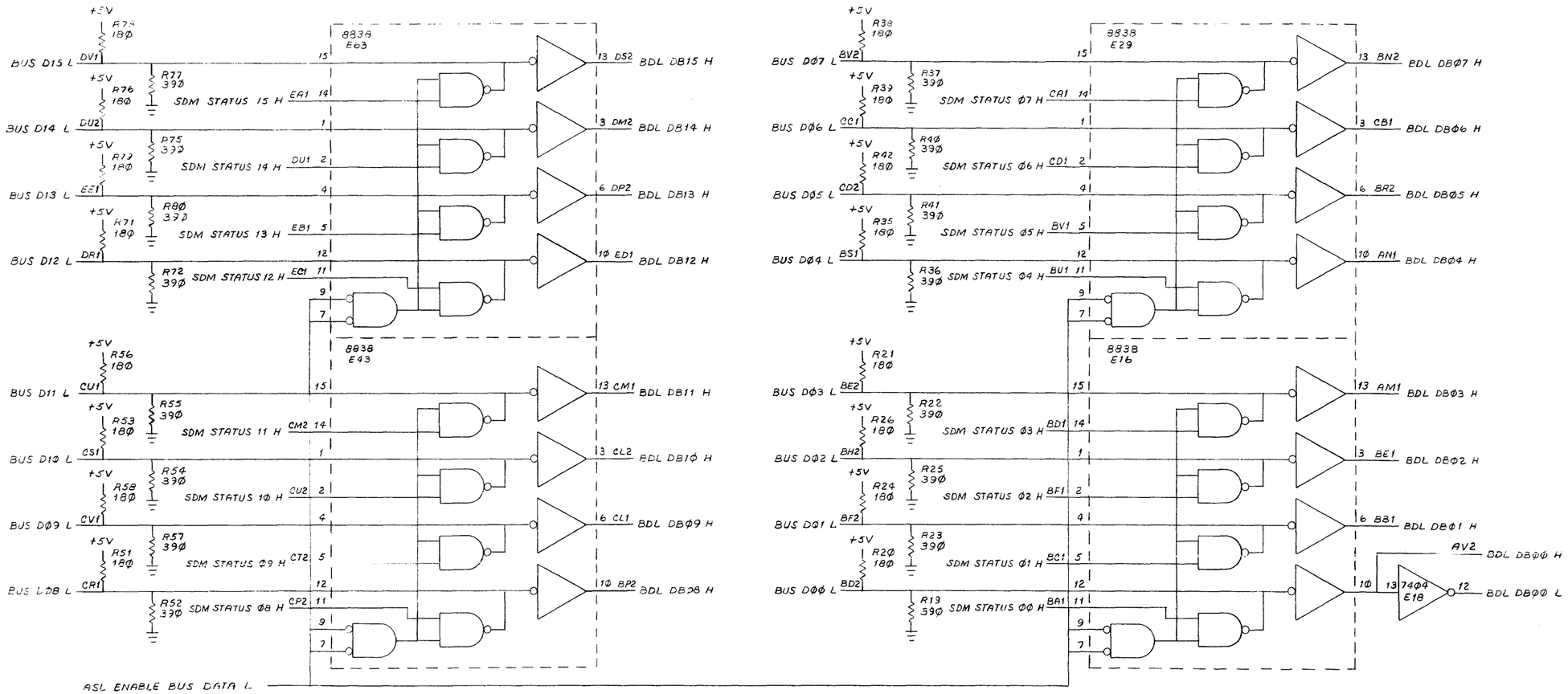

BUS DATA LINES

FIRST USED ON OPTION/MODEL	QTY.	DESCRIPTION	PART NO.	ITEM NO.
GT40		PARTS LIST		

UNLESS OTHERWISE SPECIFIED DIMENSION IN INCHES. TOLERANCES

DECIMALS	ANGLES
.XXX = .005	±0° 30'
.XX = .02	
.X = .1	

REMOVE BURRS AND BREAK SHARP CORNERS SURFACE QUALITY ✓

MATERIAL —//—

FINISH —//—

		DATE
DRN.	J. Vincent	9-26-72
CHK'D.	[illegible]	11/1/72
ENG.	[illegible]	11/1/72
PROJ. ENG.	H. S. [illegible]	11/1/72
PROD.	[illegible]	11/1/72

NEXT HIGHER ASSY. B-DD-GT40-0

SCALE —//—

SHEET 11 OF

digital EQUIPMENT CORPORATION MAYNARD MASSACHUSETTS

TITLE BUS CONTROL & BOOTSTRAP (BDL)

SIZE	CODE	NUMBER	REV.
D	CS	M7014-0-1	

DIST.

REVISIONS: CHK | CHANGE NO | REV

BRUNING 40-522 15840

This drawing and specifications, herein, are the property of Digital Equipment Corporation and shall not be reproduced or copied or used in whole or in part as the basis for the manufacture or sale of items without written permission.

THIS FACE SHEET CONTAINS THE FOLLOWING CHIP PART NUMBERS:

PART NUMBER

23-016A2
23-017A2
23-018A2
23-019A2

FIRST USED ON OPTION MODEL	QTY.	DESCRIPTION	PART NO.	ITEM NO.
GT4Ø		PARTS LIST		

DRN. CB McCoy	DATE 10-11-72	digital EQUIPMENT CORPORATION MAYNARD, MASSACHUSETTS
CHK'D. G. Nagchaug	DATE 10-11-72	TITLE
ENG. O K Gelle	DATE 10-11-72	BOOTSTRAP ROM PATTERNS
PROJ. ENG. H E Lavoie	DATE 11/9/72	
PROD. PT McCarthy	DATE 11/9/72	
NEXT HIGHER ASSEMBLY B-DD-GT4Ø-Ø		SIZE K · CODE RL · NUMBER M7Ø14-Ø-8 · REV.
SCALE — / —		
SHEET 1 OF 33		DIST.

REVISIONS: REV. · CHANGE NO. · CHK

DEC FORM NO. DRB 109

M701

DEC PART NUMB: 23-Ø16A2
ORIGINATOR: BRIAN O'DONNELL
DATE OF ORIGIN: 10-9-72

DECIMAL LOC	OCTAL LOC	BINARY DATA	OCTAL DATA
0	000	0101	05
1	001	0110	06
2	002	1101	15
3	003	0101	05
4	004	0101	05
5	005	0111	07
6	006	0111	07
7	007	1000	10
8	010	0111	07
9	011	0001	01
10	012	1010	12
11	013	0111	07
12	014	0001	01
13	015	0000	00
14	016	0110	06
15	017	1000	10
16	020	0001	01
17	021	0010	02
18	022	0000	00
19	023	0001	01
20	024	1001	11
21	025	1110	16
22	026	0001	01
23	027	1000	10
24	030	0000	00
25	031	0111	07
26	032	0010	02
27	033	0111	07
28	034	0110	06
29	035	0111	07
30	036	1000	10
31	037	0000	00
32	040	0000	00
33	041	0000	00
34	042	0110	06
35	043	1010	12

DEC PART NUMB: 23-Ø16A2
ORIGINATOR: BRIAN O'DONNELL
DATE OF ORIGIN: 10-9-72

DECIMAL LOC	OCTAL LOC	BINARY DATA	OCTAL DATA
36	044	0101	05
37	045	0101	05
38	046	0101	05
39	047	0101	05
40	050	1101	15
41	051	1001	11
42	052	0001	01
43	053	1001	11
44	054	0111	07
45	055	0111	07
46	056	0100	04
47	057	0110	06
48	060	0001	01
49	061	0010	02
50	062	0010	02
51	063	0111	07
52	064	1000	10
53	065	0111	07
54	066	0100	04
55	067	0100	04
56	070	0000	00
57	071	0000	00
58	072	0000	00
59	073	1110	16
60	074	0000	00
61	075	1110	16
62	076	0000	00
63	077	0111	07
64	100	0000	00
65	101	0000	00
66	102	0000	00
67	103	0100	04
68	104	0000	00
69	105	0100	04
70	106	0000	00
71	107	0100	04

DEC PART NUMB: 23-016A2
ORIGINATOR: BRIAN O'DONNELL
DATE OF ORIGIN: 10-9-72

DECIMAL LOC	OCTAL LOC	BINARY DATA	OCTAL DATA
72	110	0000	00
73	111	0100	04
74	112	0000	00
75	113	0100	04
76	114	0111	07
77	115	0000	00
78	116	0000	00
79	117	0100	04
80	120	0000	00
81	121	0100	04
82	122	0000	00
83	123	0110	06
84	124	0111	07
85	125	0000	00
86	126	0110	06
87	127	0000	00
88	130	1000	10
89	131	0111	07
90	132	0000	00
91	133	0111	07
92	134	0000	00
93	135	0110	06
94	136	0111	07
95	137	1111	17
96	140	0011	03
97	141	0111	07
98	142	0110	06
99	143	0000	00
100	144	1010	12
101	145	0111	07
102	146	0100	04
103	147	1000	10
104	150	1100	14
105	151	0110	06
106	152	0000	00
107	153	1110	16

DEC PART NUMB: 23-016A2
ORIGINATOR: BRIAN O'DONNELL
DATE OF ORIGIN: 10-9-72

DECIMAL LOC	OCTAL LOC	BINARY DATA	OCTAL DATA
108	154	0000	00
109	155	0100	04
110	156	1110	16
111	157	1111	17
112	160	0001	01
113	161	1000	10
114	162	1101	15
115	163	0111	07
116	164	1000	10
117	165	0111	07
118	166	0010	02
119	167	0110	06
120	170	0111	07
121	171	1100	14
122	172	1101	15
123	173	1000	10
124	174	0000	00
125	175	0111	07
126	176	1101	15
127	177	0011	03
128	200	0111	07
129	201	0111	07
130	202	1000	10
131	203	1000	10
132	204	0111	07
133	205	0000	00
134	206	0101	05
135	207	0111	07
136	210	1100	14
137	211	1010	12
138	212	0111	07
139	213	0110	06
140	214	0111	07
141	215	0100	04
142	216	1100	14
143	217	0110	06

DEC PART NUMB: 23-Ø16A2
ORIGINATOR: BRIAN O'DONNELL
DATE OF ORIGIN: 10-9-72

DECIMAL LOC	OCTAL LOC	BINARY DATA	OCTAL DATA
144	220	0000	00
145	221	0111	07
146	222	0001	01
147	223	1000	10
148	224	0111	07
149	225	0110	06
150	226	0111	07
151	227	1110	16
152	230	1011	13
153	231	0111	07
154	232	1000	10
155	233	0111	07
156	234	1110	16
157	235	1001	11
158	236	0111	07
159	237	1010	12
160	240	1000	10
161	241	0111	07
162	242	0000	00
163	243	0010	02
164	244	0111	07
165	245	0111	07
166	246	1010	12
167	247	0111	07
168	250	0010	02
169	251	1010	12
170	252	0000	00
171	253	0110	06
172	254	1000	10
173	255	0011	03
174	256	0111	07
175	257	1000	10
176	260	0000	00
177	261	1011	13
178	262	0111	07
179	263	0000	00

DEC PART NUMB: 23-Ø16A2
ORIGINATOR: BRIAN O'DONNELL
DATE OF ORIGIN: 10-9-72

DECIMAL LOC	OCTAL LOC	BINARY DATA	OCTAL DATA
180	264	0111	07
181	265	1010	12
182	266	0101	05
183	267	0101	05
184	270	0100	04
185	271	0101	05
186	272	0010	02
187	273	1111	17
188	274	0111	07
189	275	1010	12
190	276	0001	01
191	277	0111	07
192	300	0110	06
193	301	1000	10
194	302	0011	03
195	303	1001	11
196	304	0000	00
197	305	0010	02
198	306	0111	07
199	307	1000	10
200	310	0111	07
201	311	1000	10
202	312	0001	01
203	313	0011	03
204	314	0111	07
205	315	1110	16
206	316	0011	03
207	317	0000	00
208	320	0000	00
209	321	0101	05
210	322	0111	07
211	323	0111	07
212	324	1110	16
213	325	0110	06
214	326	0111	07
215	327	1000	10

DEC PART NUMB: 23-016A2
ORIGINATOR: BRIAN O'DONNELL
DATE OF ORIGIN: 10-9-72

DECIMAL LOC	OCTAL LOC	BINARY DATA	OCTAL DATA
216	330	0000	00
217	331	0000	00
218	332	0111	07
219	333	0111	07
220	334	1100	14
221	335	0110	06
222	336	0111	07
223	337	1000	10
224	340	0011	03
225	341	0010	02
226	342	1110	16
227	343	0001	01
228	344	0110	06
229	345	0000	00
230	346	0111	07
231	347	0111	07
232	350	0110	06
233	351	0000	00
234	352	1110	16
235	353	1110	16
236	354	0111	07
237	355	0110	06
238	356	0111	07
239	357	1110	16
240	360	1011	13
241	361	0111	07
242	362	1000	10
243	363	0000	00
244	364	0000	00
245	365	0110	06
246	366	0111	07
247	367	1110	16
248	370	0100	04
249	371	0000	00
250	372	0000	00
251	373	0000	00

DEC PART NUMB: 23-016A2
ORIGINATOR: BRIAN O'DONNELL
DATE OF ORIGIN: 10-9-72

DECIMAL LOC	OCTAL LOC	BINARY DATA	OCTAL DATA
252	374	0000	00
253	375	1000	10
254	376	0000	00
255	377	0000	00

DEC PART NUMB: 23-017A2
ORIGINATOR: BRIAN O'DONNELL
DATE OF ORIGIN: 10-10-72

DECIMAL LOC	OCTAL LOC	BINARY DATA	OCTAL DATA
0	000	0001	01
1	001	0000	00
2	002	0000	00
3	003	0001	01
4	004	0000	00
5	005	0001	01
6	006	0000	00
7	007	0000	00
8	010	0001	01
9	011	0000	00
10	012	0001	01
11	013	0001	01
12	014	0000	00
13	015	0000	00
14	016	0001	01
15	017	0001	01
16	020	0000	00
17	021	0001	01
18	022	1110	16
19	023	0001	01
20	024	0001	01
21	025	1110	16
22	026	0001	01
23	027	0000	00
24	030	0000	00
25	031	0000	00
26	032	0000	00
27	033	0000	00
28	034	0000	00
29	035	0000	00
30	036	0000	00
31	037	0000	00
32	040	0000	00
33	041	0000	00
34	042	0001	01
35	043	1110	16

DEC PART NUMB: 23-017A2
ORIGINATOR: BRIAN O'DONNELL
DATE OF ORIGIN: 10-10-72

DECIMAL LOC	OCTAL LOC	BINARY DATA	OCTAL DATA
36	044	0001	01
37	045	0010	02
38	046	0000	00
39	047	0001	01
40	050	0000	00
41	051	0000	00
42	052	0101	05
43	053	0001	01
44	054	0000	00
45	055	0000	00
46	056	0000	00
47	057	0001	01
48	060	0000	00
49	061	0000	00
50	062	0000	00
51	063	0110	06
52	064	1110	16
53	065	0000	00
54	066	0000	00
55	067	0001	01
56	070	0000	00
57	071	0000	00
58	072	1000	10
59	073	1000	10
60	074	1000	10
61	075	1000	10
62	076	0001	01
63	077	0000	00
64	100	0000	00
65	101	0000	00
66	102	1000	10
67	103	1000	10
68	104	1000	10
69	105	1000	10
70	106	1000	10
71	107	1000	10

DEC PART NUMBR 23-017A2
ORIGINATOR: BRIAN O'DONNELL
DATE OF ORIGIN: 10-10-72

DECIMAL LOC	OCTAL LOC	BINARY DATA	OCTAL DATA
72	110	1000	10
73	111	1000	10
74	112	0001	01
75	113	0001	01
76	114	0000	00
77	115	0000	00
78	116	0000	00
79	117	0000	00
80	120	1000	10
81	121	0000	00
82	122	1000	10
83	123	0000	00
84	124	0000	00
85	125	0000	00
86	126	0000	00
87	127	0000	00
88	130	1111	17
89	131	0000	00
90	132	0000	00
91	133	0010	02
92	134	0000	00
93	135	0000	00
94	136	0010	02
95	137	0000	00
96	140	0000	00
97	141	0000	00
98	142	0000	00
99	143	0001	01
100	144	0001	01
101	145	0000	00
102	146	0000	00
103	147	0000	00
104	150	0000	00
105	151	0001	01
106	152	0000	00
107	153	0100	04

DEC PART NUMBR 23-017A2
ORIGINATOR: BRIAN O'DONNELL
DATE OF ORIGIN: 10-10-72

DECIMAL LOC	OCTAL LOC	BINARY DATA	OCTAL DATA
108	154	1111	17
109	155	0000	00
110	156	0010	02
111	157	0000	00
112	160	0000	00
113	161	0010	02
114	162	0000	00
115	163	0000	00
116	164	0001	01
117	165	0010	02
118	166	0000	00
119	167	0000	00
120	170	0010	02
121	171	0000	00
122	172	0000	00
123	173	0001	01
124	174	0001	01
125	175	0010	02
126	176	0000	00
127	177	0000	00
128	200	0000	00
129	201	0000	00
130	202	0010	02
131	203	0000	00
132	204	1000	10
133	205	0000	00
134	206	1000	10
135	207	0001	01
136	210	0010	02
137	211	0000	00
138	212	0000	00
139	213	0010	02
140	214	1000	10
141	215	0001	01
142	216	1000	10
143	217	1001	11

DEC PART NUMB: 23-017A2
ORIGINATOR: BRIAN O'DONNELL
DATE OF ORIGIN: 10-14-72

DECIMAL LOC	OCTAL LOC	BINARY DATA	OCTAL DATA
144	220	0001	01
145	221	0001	01
146	222	0000	00
147	223	0001	01
148	224	0000	00
149	225	1111	17
150	226	0000	00
151	227	0010	02
152	230	0000	00
153	231	0001	01
154	232	0000	00
155	233	1000	10
156	234	0000	00
157	235	1000	10
158	236	1001	11
159	237	0000	00
160	240	0010	02
161	241	0101	05
162	242	1111	17
163	243	0010	02
164	244	0001	01
165	245	0000	00
166	246	0000	00
167	247	0000	00
168	250	0000	00
169	251	0001	01
170	252	1111	17
171	253	0001	01
172	254	0001	01
173	255	0000	00
174	256	0000	00
175	257	0000	00
176	260	1000	10
177	261	0000	00
178	262	0000	00
179	263	0000	00

DEC PART NUMB: 23-017A2
ORIGINATOR: BRIAN O'DONNELL
DATE OF ORIGIN: 10-14-72

DECIMAL LOC	OCTAL LOC	BINARY DATA	OCTAL DATA
180	264	0000	00
181	265	0000	00
182	266	0001	01
183	267	1110	16
184	270	0000	00
185	271	0010	02
186	272	0000	00
187	273	0000	00
188	274	0000	00
189	275	0000	00
190	276	0001	01
191	277	0000	00
192	300	0000	00
193	301	0000	00
194	302	1000	10
195	303	0000	00
196	304	0001	01
197	305	0111	07
198	306	0000	00
199	307	0000	00
200	310	0000	00
201	311	1111	17
202	312	1001	11
203	313	0000	00
204	314	0000	00
205	315	1111	17
206	316	0110	06
207	317	0100	04
208	320	1111	17
209	321	0000	00
210	322	0000	00
211	323	0000	00
212	324	1111	17
213	325	0001	01
214	326	0000	00
215	327	1111	17

DEC PART NUMBR: 23-017A2
ORIGINATOR: BRIAN O'DONNELL
DATE OF ORIGIN: 10-12-72

DECIMAL LOC	OCTAL LOC	BINARY DATA	OCTAL DATA
216	330	0000	00
217	331	0101	05
218	332	0000	00
219	333	0000	00
220	334	1111	17
221	335	0001	01
222	336	0000	00
223	337	1111	17
224	340	1000	10
225	341	0000	00
226	342	0011	03
227	343	0000	00
228	344	0000	00
229	345	0001	01
230	346	0111	07
231	347	0000	00
232	350	0000	00
233	351	0000	00
234	352	0000	00
235	353	0000	00
236	354	0000	00
237	355	1111	17
238	356	0000	00
239	357	0010	02
240	360	0000	00
241	361	0001	01
242	362	0000	00
243	363	1000	10
244	364	0000	00
245	365	0000	00
246	366	0000	00
247	367	1111	17
248	370	1001	11
249	371	0000	00
250	372	0000	00
251	373	1000	10

DEC PART NUMBR: 23-017A2
ORIGINATOR: BRIAN O'DONNELL
DATE OF ORIGIN: 10-12-72

DECIMAL LOC	OCTAL LOC	BINARY DATA	OCTAL DATA
252	374	1110	16
253	375	0000	00
254	376	0000	00
255	377	0000	00

DEC PART NUMB: 23-018A2
ORIGINATOR: BRIAN O'DONNELL
DATE OF ORIGIN: 10-11-72

DECIMAL LOC	OCTAL LOC	BINARY DATA	OCTAL DATA
0	000	0101	05
1	001	0000	00
2	002	1010	12
3	003	0001	01
4	004	0000	00
5	005	0101	05
6	006	0000	00
7	007	1111	17
8	010	0101	05
9	011	0000	00
10	012	0011	03
11	013	0101	05
12	014	0000	00
13	015	1111	17
14	016	0101	05
15	017	1011	13
16	020	1010	12
17	021	0101	05
18	022	0000	00
19	023	0000	00
20	024	0101	05
21	025	1101	15
22	026	0101	05
23	027	0000	00
24	030	1010	12
25	031	1001	11
26	032	0000	00
27	033	1010	12
28	034	0111	07
29	035	1001	11
30	036	0000	00
31	037	0000	00
32	040	0000	00
33	041	0000	00
34	042	0101	05
35	043	1100	14

DEC PART NUMB: 23-018A2
ORIGINATOR: BRIAN O'DONNELL
DATE OF ORIGIN: 10-11-72

DECIMAL LOC	OCTAL LOC	BINARY DATA	OCTAL DATA
36	044	0000	00
37	045	0101	05
38	046	1010	12
39	047	0000	00
40	050	1010	12
41	051	1010	12
42	052	0000	00
43	053	0000	00
44	054	0000	00
45	055	1001	11
46	056	0000	00
47	057	0000	00
48	060	0001	01
49	061	1010	12
50	062	1011	13
51	063	1100	14
52	064	1100	14
53	065	1001	11
54	066	0000	00
55	067	0000	00
56	070	1100	14
57	071	1100	14
58	072	1100	14
59	073	1100	14
60	074	1100	14
61	075	1100	14
62	076	0101	05
63	077	0000	00
64	100	1100	14
65	101	1100	14
66	102	1100	14
67	103	1100	14
68	104	1100	14
69	105	1100	14
70	106	1100	14
71	107	1100	14

DEC PART NUMB: 23-018A2
ORIGINATOR: BRIAN O'DONNELL
DATE OF ORIGIN: 10-11-72

DECIMAL LOC	OCTAL LOC	BINARY DATA	OCTAL DATA
72	110	1100	14
73	111	1100	14
74	112	0001	01
75	113	0101	05
76	114	0000	00
77	115	1100	14
78	116	1100	14
79	117	1100	14
80	120	1100	14
81	121	1100	14
82	122	1100	14
83	123	1011	13
84	124	0000	00
85	125	0000	00
86	126	0000	00
87	127	0000	00
88	130	1111	17
89	131	1001	11
90	132	0000	00
91	133	0000	00
92	134	0000	00
93	135	0101	05
94	136	0000	00
95	137	0000	00
96	140	0110	06
97	141	0000	00
98	142	1011	13
99	143	0101	05
100	144	1011	13
101	145	1001	11
102	146	0000	00
103	147	1011	13
104	150	0011	03
105	151	0010	02
106	152	1010	12
107	153	0101	05

DEC PART NUMB: 23-018A2
ORIGINATOR: BRIAN O'DONNELL
DATE OF ORIGIN: 10-11-72

DECIMAL LOC	OCTAL LOC	BINARY DATA	OCTAL DATA
108	154	1111	17
109	155	0011	03
110	156	0101	05
111	157	0000	00
112	160	0011	03
113	161	0101	05
114	162	0000	00
115	163	0010	02
116	164	0011	03
117	165	0010	02
118	166	0000	00
119	167	0011	03
120	170	0010	02
121	171	0000	00
122	172	0011	03
123	173	0011	03
124	174	0101	05
125	175	0000	00
126	176	0000	00
127	177	0011	03
128	200	0000	00
129	201	1011	13
130	202	1110	16
131	203	0011	03
132	204	1011	13
133	205	1110	16
134	206	0000	00
135	207	1101	15
136	210	1110	16
137	211	1110	16
138	212	1010	12
139	213	1110	16
140	214	1011	13
141	215	0010	02
142	216	0000	00
143	217	1101	15

DEC PART NUMBI 23-018A2
ORIGINATORI BRIAN O'DONNELL
DATE OF ORIGINI 10-11-72

DECIMAL LOC	OCTAL LOC	BINARY DATA	OCTAL DATA
144	220	0010	02
145	221	0101	05
146	222	0000	00
147	223	0010	02
148	224	1001	11
149	225	1111	17
150	226	1011	13
151	227	1110	16
152	230	0010	02
153	231	0101	05
154	232	1110	16
155	233	1011	13
156	234	1110	16
157	235	0000	00
158	236	1101	15
159	237	1110	16
160	240	1110	16
161	241	0101	05
162	242	1111	17
163	243	1110	16
164	244	0101	05
165	245	0000	00
166	246	1110	16
167	247	0000	00
168	250	1010	12
169	251	0101	05
170	252	0100	04
171	253	0101	05
172	254	1011	13
173	255	1010	12
174	256	1001	11
175	257	0000	00
176	260	1010	12
177	261	0010	02
178	262	1001	11
179	263	0000	00

DEC PART NUMBI 23-018A2
ORIGINATORI BRIAN O'DONNELL
DATE OF ORIGINI 10-11-72

DECIMAL LOC	OCTAL LOC	BINARY DATA	OCTAL DATA
180	264	1001	11
181	265	0000	00
182	266	0000	00
183	267	0101	05
184	270	0000	00
185	271	0101	05
186	272	0000	00
187	273	0011	03
188	274	1001	11
189	275	0000	00
190	276	0000	00
191	277	1001	11
192	300	0000	00
193	301	0100	04
194	302	1011	13
195	303	0011	03
196	304	0101	05
197	305	1101	15
198	306	1001	11
199	307	0000	00
200	310	0000	00
201	311	1110	16
202	312	0000	00
203	313	0001	01
204	314	1001	11
205	315	1110	16
206	316	0000	00
207	317	0101	05
208	320	1111	17
209	321	1010	12
210	322	0000	00
211	323	1001	11
212	324	1111	17
213	325	0000	00
214	326	1001	11
215	327	1111	17

DEC PART NUMB: 23-018A2
ORIGINATOR: BRIAN O'DONNELL
DATE OF ORIGIN: 10-11-72

DECIMAL LOC	OCTAL LOC	BINARY DATA	OCTAL DATA
216	330	0000	00
217	331	0101	05
218	332	0000	00
219	333	1001	11
220	334	1111	17
221	335	0000	00
222	336	1001	11
223	337	1111	17
224	340	1011	13
225	341	0010	02
226	342	0101	05
227	343	0000	00
228	344	0011	03
229	345	0101	05
230	346	1101	15
231	347	1001	11
232	350	0000	00
233	351	0000	00
234	352	0001	01
235	353	0000	00
236	354	1001	11
237	355	1111	17
238	356	1011	13
239	357	1110	16
240	360	0010	02
241	361	0000	00
242	362	1101	15
243	363	1010	12
244	364	0000	00
245	365	0010	02
246	366	0000	00
247	367	0000	00
248	370	1010	12
249	371	0000	00
250	372	0010	02
251	373	0000	00

DEC PART NUMB: 23-018A2
ORIGINATOR: BRIAN O'DONNELL
DATE OF ORIGIN: 10-11-72

DECIMAL LOC	OCTAL LOC	BINARY DATA	OCTAL DATA
252	374	0000	00
253	375	0000	00
254	376	0000	00
255	377	0000	00

DEC PART NUMB: 23-Ø19A2
ORIGINATOR: BRIAN O'DONNELL
DATE OF ORIGIN: 10-11-72

DECIMAL LOC	OCTAL LOC	BINARY DATA	OCTAL DATA
Ø	ØØØ	1100	14
1	ØØ1	ØØØ1	Ø1
2	ØØ2	ØØØØ	ØØ
3	ØØ3	1110	16
4	ØØ4	ØØØØ	ØØ
5	ØØ5	1111	17
6	ØØ6	ØØØØ	ØØ
7	ØØ7	Ø111	Ø7
8	Ø1Ø	1111	17
9	Ø11	ØØØØ	ØØ
1Ø	Ø12	Ø101	Ø5
11	Ø13	1111	17
12	Ø14	1ØØØ	1Ø
13	Ø15	Ø111	Ø7
14	Ø16	1100	14
15	Ø17	1111	17
16	Ø2Ø	ØØØØ	ØØ
17	Ø21	1100	14
18	Ø22	ØØØØ	ØØ
19	Ø23	1ØØ1	11
2Ø	Ø24	1100	14
21	Ø25	1110	16
22	Ø26	1100	14
23	Ø27	ØØØ1	Ø1
24	Ø3Ø	ØØØØ	ØØ
25	Ø31	1111	17
26	Ø32	ØØØ1	Ø1
27	Ø33	ØØ11	Ø3
28	Ø34	1100	14
29	Ø35	1111	17
3Ø	Ø36	1ØØØ	1Ø
31	Ø37	1Ø1Ø	12
32	Ø4Ø	1Ø1Ø	12
33	Ø41	1Ø1Ø	12
34	Ø42	1110	16
35	Ø43	ØØ11	Ø3

DEC PART NUMB: 23-Ø19A2
ORIGINATOR: BRIAN O'DONNELL
DATE OF ORIGIN: 10-11-72

DECIMAL LOC	OCTAL LOC	BINARY DATA	OCTAL DATA
36	Ø44	Ø1ØØ	Ø4
37	Ø45	Ø1Ø1	Ø5
38	Ø46	ØØØ1	Ø1
39	Ø47	1ØØ1	11
4Ø	Ø5Ø	ØØØØ	ØØ
41	Ø51	ØØØØ	ØØ
42	Ø52	ØØØ1	Ø1
43	Ø53	1ØØØ	1Ø
44	Ø54	1ØØØ	1Ø
45	Ø55	1111	17
46	Ø56	Ø1Ø1	Ø5
47	Ø57	ØØ1Ø	Ø2
48	Ø6Ø	ØØØØ	ØØ
49	Ø61	ØØØØ	ØØ
5Ø	Ø62	1101	15
51	Ø63	1ØØØ	1Ø
52	Ø64	1Ø1Ø	12
53	Ø65	1111	17
54	Ø66	Ø1ØØ	Ø4
55	Ø67	ØØØØ	ØØ
56	Ø7Ø	1100	14
57	Ø71	1100	14
58	Ø72	1100	14
59	Ø73	Ø1ØØ	Ø4
6Ø	Ø74	1100	14
61	Ø75	Ø1ØØ	Ø4
62	Ø76	1ØØØ	1Ø
63	Ø77	1ØØØ	1Ø
64	1ØØ	1100	14
65	1Ø1	1100	14
66	1Ø2	1100	14
67	1Ø3	Ø1ØØ	Ø4
68	1Ø4	1100	14
69	1Ø5	Ø1ØØ	Ø4
7Ø	1Ø6	1100	14
71	1Ø7	Ø1ØØ	Ø4

DEC PART NUMB: 23-Ø19A2
ORIGINATOR: BRIAN O'DONNELL
DATE OF ORIGIN: 10-11-72

DECIMAL LOC	OCTAL LOC	BINARY DATA	OCTAL DATA
72	110	1100	14
73	111	Ø100	Ø4
74	112	Ø000	ØØ
75	113	1000	10
76	114	1000	10
77	115	Ø100	Ø4
78	116	Ø100	Ø4
79	117	Ø000	ØØ
80	120	Ø000	ØØ
81	121	Ø000	ØØ
82	122	Ø000	ØØ
83	123	1101	15
84	124	1000	10
85	125	Ø000	ØØ
86	126	Ø001	Ø1
87	127	Ø011	Ø3
88	130	1111	17
89	131	1111	17
90	132	Ø001	Ø1
91	133	Ø001	Ø1
92	134	Ø010	Ø2
93	135	Ø110	Ø6
94	136	Ø001	Ø1
95	137	Ø101	Ø5
96	140	Ø110	Ø6
97	141	1000	10
98	142	1101	15
99	143	1100	14
100	144	1111	17
101	145	1111	17
102	146	Ø011	Ø3
103	147	1100	14
104	150	1111	17
105	151	Ø010	Ø2
106	152	Ø001	Ø1
107	153	1100	14

DEC PART NUMB: 23-Ø19A2
ORIGINATOR: BRIAN O'DONNELL
DATE OF ORIGIN: 10-11-72

DECIMAL LOC	OCTAL LOC	BINARY DATA	OCTAL DATA
108	154	1000	10
109	155	1111	17
110	156	1100	14
111	157	Ø111	Ø7
112	160	1111	17
113	161	1100	14
114	162	Ø111	Ø7
115	163	Ø000	ØØ
116	164	1000	10
117	165	Ø001	Ø1
118	166	Ø101	Ø5
119	167	1001	11
120	170	Ø001	Ø1
121	171	Ø100	Ø4
122	172	Ø010	Ø2
123	173	1000	10
124	174	1000	10
125	175	Ø001	Ø1
126	176	Ø111	Ø7
127	177	1110	16
128	200	1000	10
129	201	1111	17
130	202	1111	17
131	203	Ø000	ØØ
132	204	1111	17
133	205	1000	10
134	206	Ø000	ØØ
135	207	1111	17
136	210	1110	16
137	211	Ø111	Ø7
138	212	Ø011	Ø3
139	213	1110	16
140	214	1111	17
141	215	Ø101	Ø5
142	216	Ø000	ØØ
143	217	1110	16

DEC PART NUMBI 23-019A2
ORIGINATORI BRIAN O'DONNELL
DATE OF ORIGINI 10-11-72

DECIMAL LOC	OCTAL LOC	BINARY DATA	OCTAL DATA
144	220	0101	05
145	221	1111	17
146	222	0000	00
147	223	0100	04
148	224	1111	17
149	225	1101	15
150	226	1111	17
151	227	1100	14
152	230	1111	17
153	231	1011	13
154	232	0101	05
155	233	1111	17
156	234	0100	04
157	235	0000	00
158	236	1111	17
159	237	0100	04
160	240	1011	13
161	241	1111	17
162	242	0000	00
163	243	1011	13
164	244	1111	17
165	245	0000	00
166	246	0011	03
167	247	1000	10
168	250	0000	00
169	251	1100	14
170	252	0000	00
171	253	1100	14
172	254	1111	17
173	255	0000	00
174	256	1111	17
175	257	0011	03
176	260	1100	14
177	261	1111	17
178	262	1111	17
179	263	0011	03

DEC PART NUMBI 23-019A2
ORIGINATORI BRIAN O'DONNELL
DATE OF ORIGINI 10-11-72

DECIMAL LOC	OCTAL LOC	BINARY DATA	OCTAL DATA
180	264	1111	17
181	265	0011	03
182	266	0000	00
183	267	1100	14
184	270	0000	00
185	271	1100	14
186	272	0000	00
187	273	0001	01
188	274	1111	17
189	275	0010	02
190	276	0000	00
191	277	1111	17
192	300	0001	01
193	301	0000	00
194	302	1100	14
195	303	1110	16
196	304	1100	14
197	305	0100	04
198	306	1111	17
199	307	0100	04
200	310	0111	07
201	311	1000	10
202	312	0001	01
203	313	1111	17
204	314	1111	17
205	315	1011	13
206	316	0000	00
207	317	1100	14
208	320	0000	00
209	321	1100	14
210	322	1000	10
211	323	1111	17
212	324	1110	16
213	325	0010	02
214	326	1111	17
215	327	1110	16

DEC PART NUMB: 23-019A2
ORIGINATOR: BRIAN O'DONNELL
DATE OF ORIGIN: 10-11-72

DECIMAL LOC	OCTAL LOC	BINARY DATA	OCTAL DATA
216	330	1100	14
217	331	1000	10
218	332	1000	10
219	333	1111	17
220	334	1110	16
221	335	0010	02
222	336	1111	17
223	337	1101	15
224	340	1100	14
225	341	1110	16
226	342	1100	14
227	343	0000	00
228	344	0000	00
229	345	1100	14
230	346	0100	04
231	347	1111	17
232	350	0000	00
233	351	0000	00
234	352	1111	17
235	353	0101	05
236	354	1111	17
237	355	0010	02
238	356	1111	17
239	357	0001	01
240	360	1111	17
241	361	0011	03
242	362	1010	12
243	363	0000	00
244	364	1100	14
245	365	1111	17
246	366	1000	10
247	367	1010	12
248	370	0101	05
249	371	0000	00
250	372	1111	17
251	373	0000	00

DEC PART NUMB: 23-019A2
ORIGINATOR: BRIAN O'DONNELL
DATE OF ORIGIN: 10-11-72

DECIMAL LOC	OCTAL LOC	BINARY DATA	OCTAL DATA
252	374	0000	00
253	375	0001	01
254	376	0000	00
255	377	0000	00

PAGE REVISION CONTROL SHEET

SH NO.	PAGE REVISIONS	REMARKS
1	B	
2	B	
3	B	
4	B	(VG)
5	B	(CSG)
6	B	(VR)
7	B	(BRM)
8	B	(MC)
9	B	(DCR)
10	B	(PR)
11	B	(DAC)

DATE	ENG.	ETCH REV.	ECO NO.
—	—	C	—

FIRST USED ON OPTION/MODEL

VT4Ø

DRN. S. Roberts	DATE 10/11/72	digital EQUIPMENT CORPORATION MAYNARD MASSACHUSETTS
CHK'D	DATE 10/25/72	
ENG. R. T. Walsh	DATE 10/25/72	TITLE VT4Ø DISPLAY GENERATOR
PROJ. ENG. H. E. Lavoie	DATE 10/26/72	
PROD. T. M. Courtney	DATE 10/25/72	
NEXT HIGHER ASSY. B-DD-VT4Ø-Ø	SIZE B	CODE CS
SCALE —	NUMBER A32Ø-Ø-1	REV. B
SHEET 1 OF 11	DIST.	

"THIS DRAWING AND SPECIFICATIONS, HEREIN, ARE THE PROPERTY OF DIGITAL EQUIPMENT CORPORATION AND SHALL NOT BE REPRODUCED OR COPIED OR USED IN WHOLE OR IN PART AS THE BASIS FOR THE MANUFACTURE OR SALE OF ITEMS WITHOUT WRITTEN PERMISSION.
COPYRIGHT © DIGITAL EQUIPMENT CORPORATION"

This drawing and specifications, herein, are the property of Digital Equipment Corporation and shall not be reproduced or copied or used in whole or in part as the basis for the manufacture or sale of items without written permission. COPYRIGHT ©
DIGITAL EQUIPMENT CORP.

NOTES:

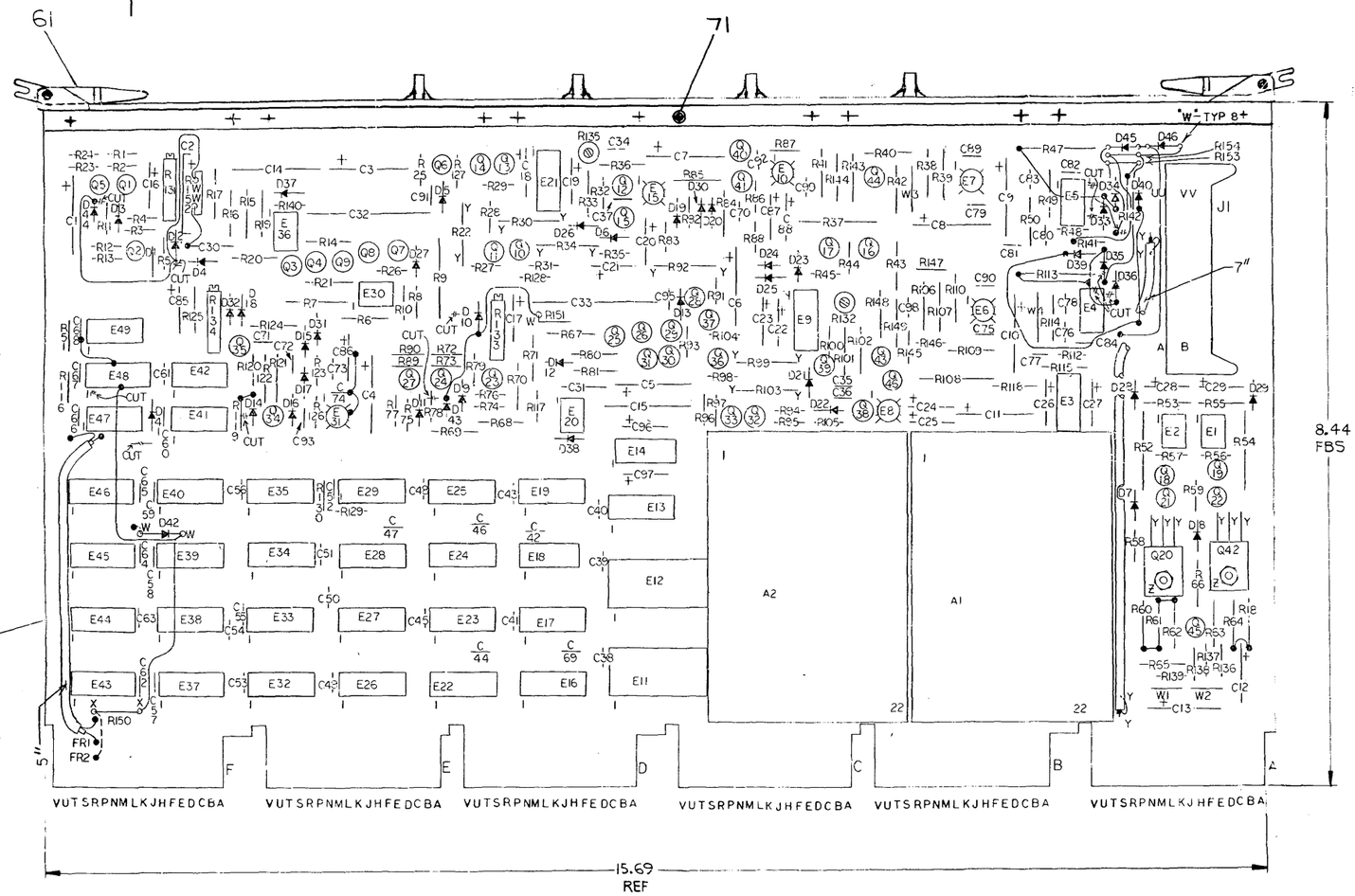

REF				
REF		X-Y COORDINATE HOLE LOCATION	K-CO-A320-B-4	1
REF		ASSY/DRILLING HOLE LAYOUT	D-AH-A320-B-5	2
REF		MODULE ECO HISTORY	B-MH-A320-B-6	3
1		ETCHED CKT BD	5010099	4
2	C34, C35	CAP 27PF 100V 5% DM	1001739	5
2	C36, C37	CAP 47PF 100V 5% DM	1000011	6
2	C91, C95	CAP 330PF 100V 5% DM	1000023	7
2	C14, C15	CAP .22UF 100V 10% MYLAR	1030037	8
2	C32, C33	CAP .02UF 50V 5% POLY	1011094	9
1	C98	CAP 10PF 100V 5% DM	1000006	10
32	C38 THRU C69	CAP 22UF 50V 8% CLR	1010274	11
1	C99	CAP 56PF 100V 5% DM	1000012	12
13	C1 THRU C13	CAP 100UF 20V 10% TANT	1004815	13
15	C70 THRU C84	CAP .01UF 100V 20% DISC	1001610	14
18	C16 THRU C29, E87, C88, C96, C97	CAP 1UF 35V 10% TANT	1001776	15
2	C89, C90	CAP 100PF 100V 5% DM	1000016	16
2	C85, C86	CAP 6.8UF 35V 10% TANT	1005306	17
2	C92, C93	CAP 100CPF 100V 5% DM	1000042	18
2	C30, C31	CAP 15UF 20V 10% TANT	1004812	19
2	D43, D44	DIODE IN753A	1102421	20
4	D39, D40, D45, D46	DIODE IN746A 3.3V ZENER	1104860	21
3	D41, D42, D30	DIODE ¼M5.1AZ1 5.1V 1%	1105871	22
3	D27, D28, D29	DIODE IN825	1101385	23
22	D5, D6, D13-D26, D33-D38	DIODE D664	1100114	24
8	D1-D4, D9-D12	DIODE DEC777	1103041	25
2	D7, D8	DIODE IN4001	1102942	26
2	D31, D32	DIODE IN752A	1102808	27
1	J1	CONNECTOR RT, ANG, HEADER	1205941	28
2	A1, A2	12 BIT DAC	A6000	29
2	R151, R152	RESISTOR 270 ½W 5%	1300285	30
1	R150	RESISTOR 180 1W 5%	1300262	31
1	R137	RESISTOR 1.5K ¼W 5%	1300391	32
10	R86, R33, R36, R83, R101, R102, R113, R114, R142, R149	RESISTOR 1K 1/8W .1% MF	1304865	33
1	R130	RESISTOR 330 ¼W 10%	1300293	34
1	R129	RESISTOR 750 ¼W 5%	1301401	35
1	R118	RESISTOR 464K1/8W 1% MF	1303043	36
1	R42	RESISTOR 4.64K 1/8W 1% MF	1301802	37
2	R3, R74	RESISTOR 2.7K ¼W 5%	1300426	38
2	R11, R78	RESISTOR 68 ¼W 5%	1300219	39
8	R57, R39, R41, R47, R108, R110, R106, R113	RESISTOR 2K 1/8W .1% MF	1305352	40
2	R38, R109	RESISTOR 422 ¼W 1% MF	1300314	41
14	R1, R2, R12, R24, R72, R73, R77, R90, R27, R31, R94, R96, R45, R148	RESISTOR 470 ¼W 5%	1300316	42
17	R13, R23, R25, R89, R91, R28, R128, R29, R127, R95, R97, R98, R104, R44, R147, R146, R75	RESISTOR 270 ¼W 5%	1301972	43
1	R43	RESISTOR 562 ¼W 1% MF	1304693	44
3	R84, R121, R124	RESISTOR 562 ½W 1% MF	1305769	45
2	R85, R122	RESISTOR 2.74K 1/8W 1% MF	1304868	46
1	R125	RESISTOR 4.64K 1/8W 1% MF	1304856	47
1	R123	RESISTOR 6.8K ¼W 5%	1301423	48
2	R65, R66	RESISTOR 1K ¼W 5%	1300364	49
2	R62, R63	RESISTOR 7K 1/8W .1% MF	1305355	50
8	R56-R59, R138, R139, R140, R117	RESISTOR 2.2K ¼W 5%	1300417	51
QTY	REF DESIGNATION	DESCRIPTION	PART NO.	ITEM NO.

PARTS LIST

ETCH BOARD REV C

7496	12	5	
7497	8	16	
74193	8	16	
7476	13	5	
74191	8	16	
7485	8	16	
IC TYPE	GND	+ 5V	

GND AND 5V ARE USUALLY PIN 7 AND 14 RESPECTIVELY EXCEPTIONS ARE STATED ABOVE

IC PIN LOCATIONS

IN4001	MR-2064		
FD777	SAME		
DC64	IN136-05		
IN825	SAME		
1/4M5.1AZ1	NA		
IN747A	NA		
IN753A	NA	IN752A	NA
DEC NO.	EIA NO.	DEC NO.	EIA NO.

SEMICONDUCTOR CONVERSION CHART

FIRST USED ON OPTION MODEL: VT40

ORIGINATED B
CHANGE NO
REVISIONS
CHK

DRN. S. Roberts DATE 3/25/72
CHKD. DATE 5/24/72
ENGR. DATE 5/24/72
PROJ. ENG. DATE 10/26/72
PROD. DATE 10/26/72
NEXT HIGHER ASSY B-DD-VT40-0
SCALE —
SHEET 2 OF

digital EQUIPMENT CORPORATION MAYNARD MASSACHUSETTS

TITLE
VT40
DISPLAY
GENERATOR

SIZE D | CODE CS | NUMBER A320-0 | REV

DIST.

BRUNING 40-522 16699
DEC FORM NO CPD-354

REV B
A320-0-1
SIZE D | CODE CS

This drawing and specifications, herein, are the property of Digital Equipment Corporation and shall not be reproduced or copied or used in whole or in part as the basis for the manufacture or sale of items without written permission. COPYRIGHT ©

DIGITAL EQUIPMENT CORP.

NOTES:

QTY.	REF DESIGNATION	DESCRIPTION	PART NO.	ITEM NO.
2		SCR BHM #4-40 X 5/16 LG	9006010-4	105
2		KEP NUT #4-40	9006557	106
1		COAX CABLE RG174U 7" LONG	9107530	107
1		COAX CABLE RG174U 5" LONG	9107530	108
2	R52, R54	RESISTOR 2K ½W 1% MF	1302329	52
2	R53, R55	RESISTOR 4K 1/8W 1% MF	1305554	53
2	R18, R60	RESISTOR 1.5 ½W 10%	1301641	54
6	R14,R20,R21,R67,R80,R81	RESISTOR 6.2K 1/20W .5% MF	1311093	55
2	R132, R135	RESISTOR 1K ½W 20% 62PR	1309150-03	56
2	R131, R133	RESISTOR 20K ¼W 10% 76PR	1309143-11	57
1	R134	RESISTOR 1K ¼W 10% 76PR	1309143-07	58
6	R92,R22,R30,R34,R99,R103	RESISTOR 1K 1W 5%	1300368	59
6	R93,R26,R35,R32,R100,R105	RESISTOR 10K ¼W 5%	1300479	60
1		HANDLE	7210711-2	61
2	R19, R71	RESISTOR 100 1/8W 1% MF	1302825	62
1	R7	RESISTOR 6.49K ¼W 1% MF	1309314-08	63
2	R15, R68	RESISTOR 5.11K 1/8W 1% MF	1304854	64
2	R17, R70	RESISTOR 19.6K 1/8W 1% MF	1309419	65
2	R4, R79	RESISTOR 680 ¼W 5%	1301424	66
1	R6	RESISTOR 3.83K 1/8W 1% MF	1309413	67
1	R8	RESISTOR 390 ¼W 5%	1300309	68
12	R136,R5,R76,R10,R119,R82, R51,R88,R142,R141,R153,R154	RESISTOR 1K ¼W 5%	1300365	69
1	R9	RESISTOR 422 ½W 1% MF	1300313	70
12		EYELET (GS-4-7)	9006732	71
4	R49,R50,R114,R115	RESISTOR 100 ½W 5%	1300228	72
2	R48, R112	RESISTOR 100 ¼W 5%	1300229	73
2	R61, R64	RESISTOR 10K 1/8W .1% MF	1305431	74
				75
1	R86	RESISTOR 820 ¼W 5%	1301775	76
3	R120,R116,R83	RESISTOR 560 ¼W 5%	1301890	77
2	R87,R126	RESISTOR 15K 1/4W 1% MF	1300496	78
2	R107, R40	RESISTOR 5[illegible]1/8W 1% MF	1305122	79
1	Q45	TRANSISTOR DEC 3009B	1503100	80
12	Q19,Q22,Q5,Q27,Q10,Q11,Q34, Q32,Q33,Q40,Q17,Q46	TRANSISTOR DEC 6534B	1503409-01	81
7	Q21,Q18,Q35,Q41,Q44,Q16,Q43	TRANSISTOR DEC 6531B	1509338	82
4	Q12,Q15,Q38,Q39	TRANSISTOR 2N5245	1509681	83
10	Q1,Q2,Q6,Q13,Q14,Q23,Q24, Q28,Q36,Q37	TRANSISTOR DEC 3646	1503014	84
4	Q3,Q4,Q25,Q26	TRANSISTOR 2N4250	1509142	85
1	Q20	TRANSISTOR MJE 3055	1510555	86
1	Q42	TRANSISTOR MJE 2955	1510556	87
6	Q7,Q8,Q9,Q29,Q30,Q31	TRANSISTOR 2N5638	1511095	88
3	E34,E39,E45	IC DEC 7485	1910224	89
5	E23,E28,E35,E40,E46	IC DEC 74157	1910655	90
3	E24,E25,E29	IC DEC 74191	1910096	91
4	E6,E7,E8,E15	IC LM 318	1910735	92
2	E4, E5	IC DEC 0002	1910446	93
5	E1,E2,E20,E30,E36	IC DEC 741	1910298	94
2	E10, E31	IC LM 302	1909343	95
4	E3,E9,E14,E21	IC LM 310	1910235	96
1	E47	IC DEC 7417	1909929	97
1	E49	IC DEC 7474	1905547	98
2	E41, E42	IC DEC 74S04	1910534	99
1	E48	IC DEC 7476	1905585	100
2	E11, E12	IC DEC 8202	1910275	101
6	E13,E16,E17,E18,E19,E22	IC DEC 74193	1910018	102
4	E27,E33,E38,E44	IC DEC 7497	1911195	103
4	E26,E32,E37,E43	IC DEC 7496	1910363	104

IC TYPE	GND	+ 5V

GND AND 5V ARE USUALLY PIN 7 AND 14 RESPECTIVELY EXCEPTIONS ARE STATED ABOVE

IC PIN LOCATIONS

DRAWING 40-522 14699

DEC FORM NO DPD 1254

DEC NO.	EIA NO.	DEC NO.	EIA NO.

SEMICONDUCTOR CONVERSION CHART

REV | CHANGE NO. | REVISIONS | CHK

FIRST USED ON OPTION MODEL: VT40

ETCH BOARD REV

PARTS LIST

DRN. [illegible] DATE 9/24/72
CHK'D. [illegible] DATE [illegible]
ENG. [illegible] DATE
PROJ. ENG. [illegible] DATE 10/27/72
PROD. [illegible] DATE [illegible]
NEXT HIGHER ASSY B-DD-VT40-0
SCALE
SHEET 3 OF

digital EQUIPMENT CORPORATION MAYNARD MASSACHUSETTS

TITLE
VT40
DISPLAY
GENERATOR

SIZE D | CODE CS | NUMBER A320-0-1 | REV. B

DIST.

REV B

SIZE D CODE CS NUMBER A320-0-1

B

A320-0-1 REV B SIZE D CODE CS

8 7 6 5 4 3 2 1

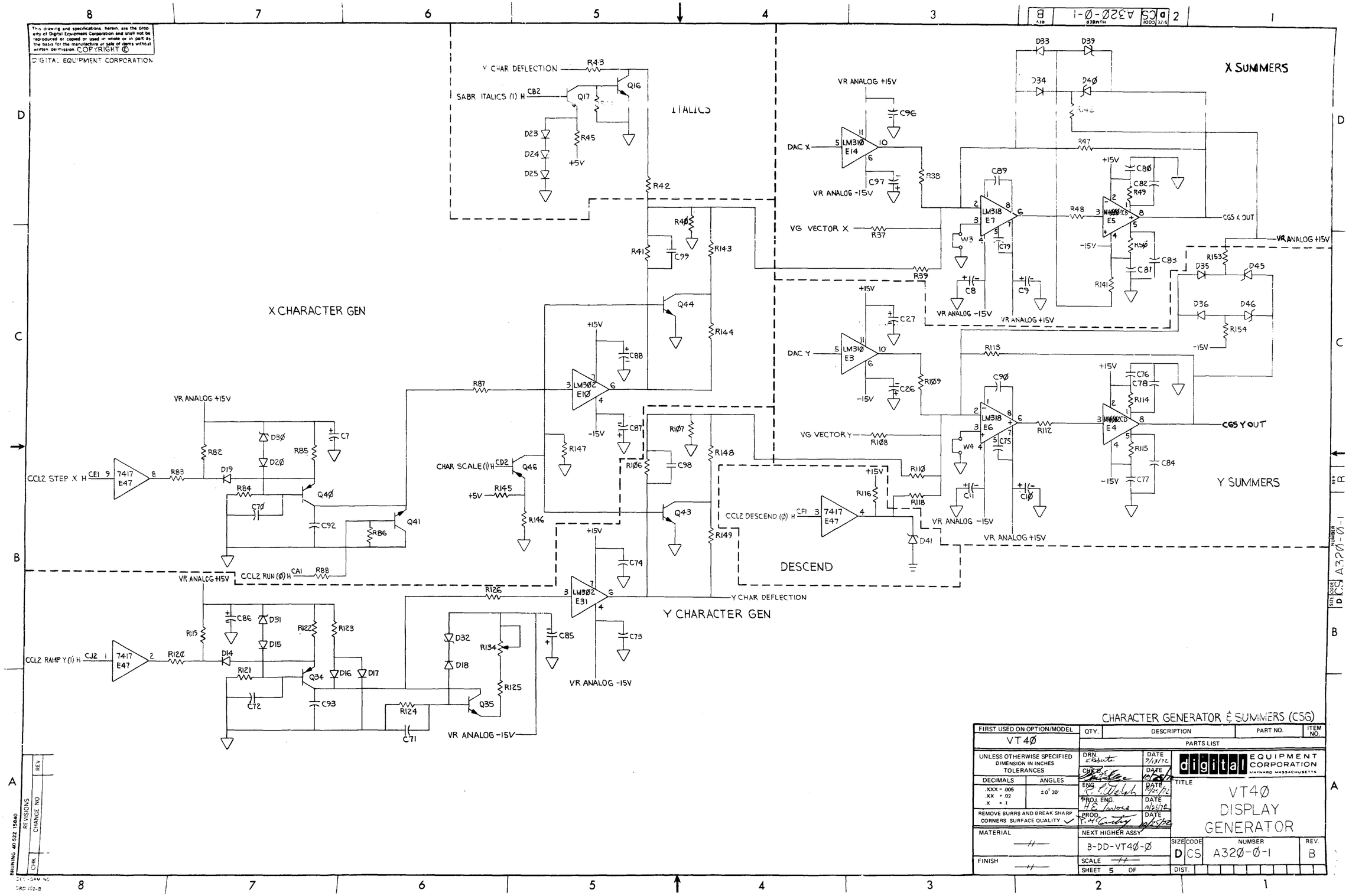

CHARACTER GENERATOR & SUMMERS (CSG)

FIRST USED ON OPTION/MODEL	QTY.	DESCRIPTION	PART NO.	ITEM NO.
VT4Ø		PARTS LIST		

UNLESS OTHERWISE SPECIFIED DIMENSION IN INCHES TOLERANCES

DECIMALS	ANGLES
.XXX = .005 .XX = .02 .X = .1	±0° 30'

REMOVE BURRS AND BREAK SHARP CORNERS SURFACE QUALITY ✓

MATERIAL —//—

FINISH —//—

DRN. S. Roberts	DATE 9/13/72	digital EQUIPMENT CORPORATION MAYNARD MASSACHUSETTS
CHK'D. [signature]	DATE 10/25/72	
ENG. [signature]	DATE 10/25/72	TITLE VT4Ø DISPLAY GENERATOR
PROJ. ENG. H.E. Lavoie	DATE 10/25/72	
PROD. [signature]	DATE 10/25/72	
NEXT HIGHER ASSY. B-DD-VT4Ø-Ø		SIZE D · CODE CS · NUMBER A32Ø-Ø-1 · REV. B
SCALE —//—		
SHEET 5 OF		DIST.

REVISIONS: CHK · CHANGE NO · REV

BRUNING 40-522 15840

DEC-DRW NO DRD 102-B

This drawing and specifications, herein, are the property of Digital Equipment Corporation and shall not be reproduced or copied or used in whole or in part as the basis for the manufacture or sale of items without written permission. COPYRIGHT ©
DIGITAL EQUIPMENT CORPORATION

X PRECISION PULSE

CONSTANT VOLTAGE SOURCE

Y PRECISION PULSE

X RAMP GEN

X RAMP SWITCH

Y RAMP GEN

Y RAMP SWITCH

VG VECTOR X

VG VECTOR Y

VC1 UNLATCH H

PVCS Δ X H

PVCS Δ Y H

BRM COUNT X H

BRM COUNT Y H

PCC ANALOG CLOCK H

VECTOR GENERATOR (VG)

FIRST USED ON OPTION/MODEL	QTY.	DESCRIPTION	PART NO.	ITEM NO.
VT40		PARTS LIST		

UNLESS OTHERWISE SPECIFIED DIMENSION IN INCHES. TOLERANCES
DECIMALS: XXX = .005, XX = .02, X = .1 — ANGLES: ±0° 30'
REMOVE BURRS AND BREAK SHARP CORNERS SURFACE QUALITY ✓

DRN. S Roberts	DATE 9/22/72	digital EQUIPMENT CORPORATION MAYNARD MASSACHUSETTS
CHK'D.	DATE	
ENG.	DATE	TITLE: VT40 DISPLAY GENERATOR
PROJ. ENG.	DATE	
PROD.	DATE	

MATERIAL —
FINISH —
NEXT HIGHER ASSY. B-DD-VT40-0
SCALE —
SHEET 4 OF

SIZE	CODE	NUMBER	REV.
D	CS	A320-0-1	B

DIST.

REVISIONS: REV | CHANGE NO | CHK

BRUNING 40-522 15840
DEC FORM NO 102-B

This drawing and specifications, herein, are the property of Digital Equipment Corporation and shall not be reproduced or copied or used in whole or in part as the basis for the manufacture or sale of items without written permission. COPYRIGHT ©

DIGITAL EQUIPMENT CORPORATION

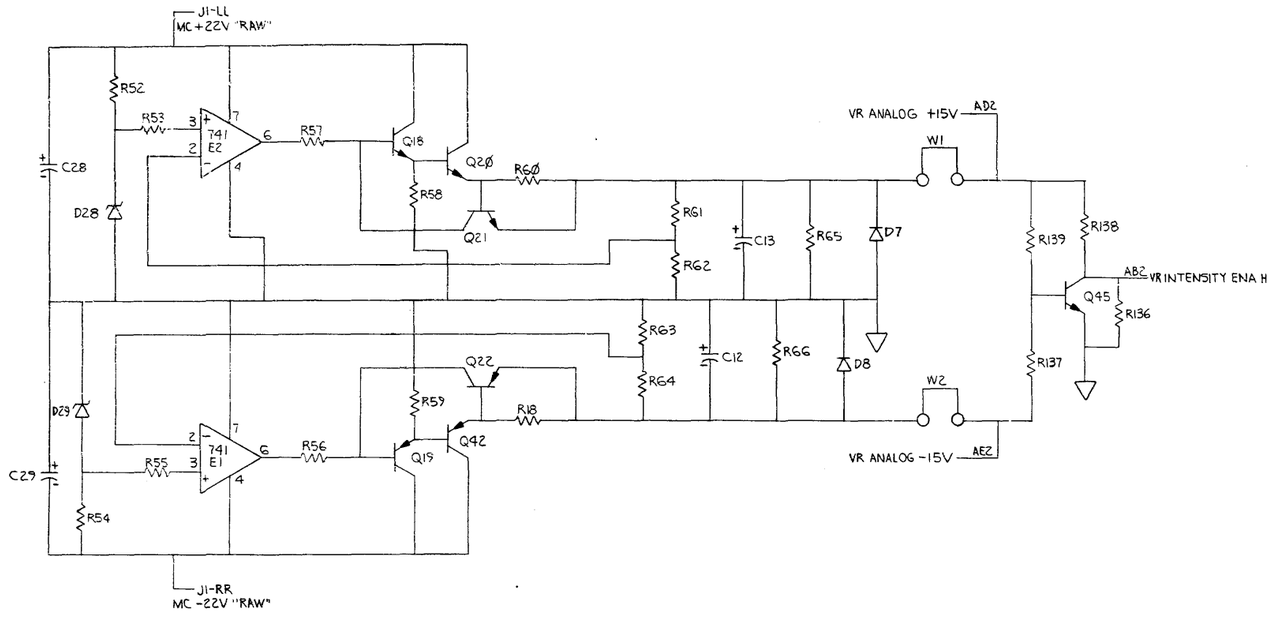

VOLTAGE REGULATORS (VR)

FIRST USED ON OPTION/MODEL	QTY.	DESCRIPTION	PART NO	ITEM NO.
VT40		PARTS LIST		

UNLESS OTHERWISE SPECIFIED DIMENSION IN INCHES. TOLERANCES

DECIMALS	ANGLES
.XXX = .005	
.XX = .02	
.X = .1	

REMOVE BURRS AND BREAK SHARP CORNERS SURFACE QUALITY ✓

MATERIAL —//—

FINISH —//—

DRN. S. Roberts	DATE 9/25/72	digital EQUIPMENT CORPORATION MAYNARD MASSACHUSETTS
CHK'D. [illegible]	DATE 10/25/72	
ENG [illegible]	DATE	TITLE VT40 DISPLAY GENERATOR
PROJ. ENG. H.E. Lawrence	DATE 10/25/72	
PROD. P. McCarthy	DATE 10/25/72	
NEXT HIGHER ASSY. B-DD-VT40-0		SIZE D CODE CS NUMBER A320-0-1 REV B
SCALE —//—		
SHEET 6 OF		DIST.

BRUNING 40-522 15840

DEC FORM NO DRD 102-B

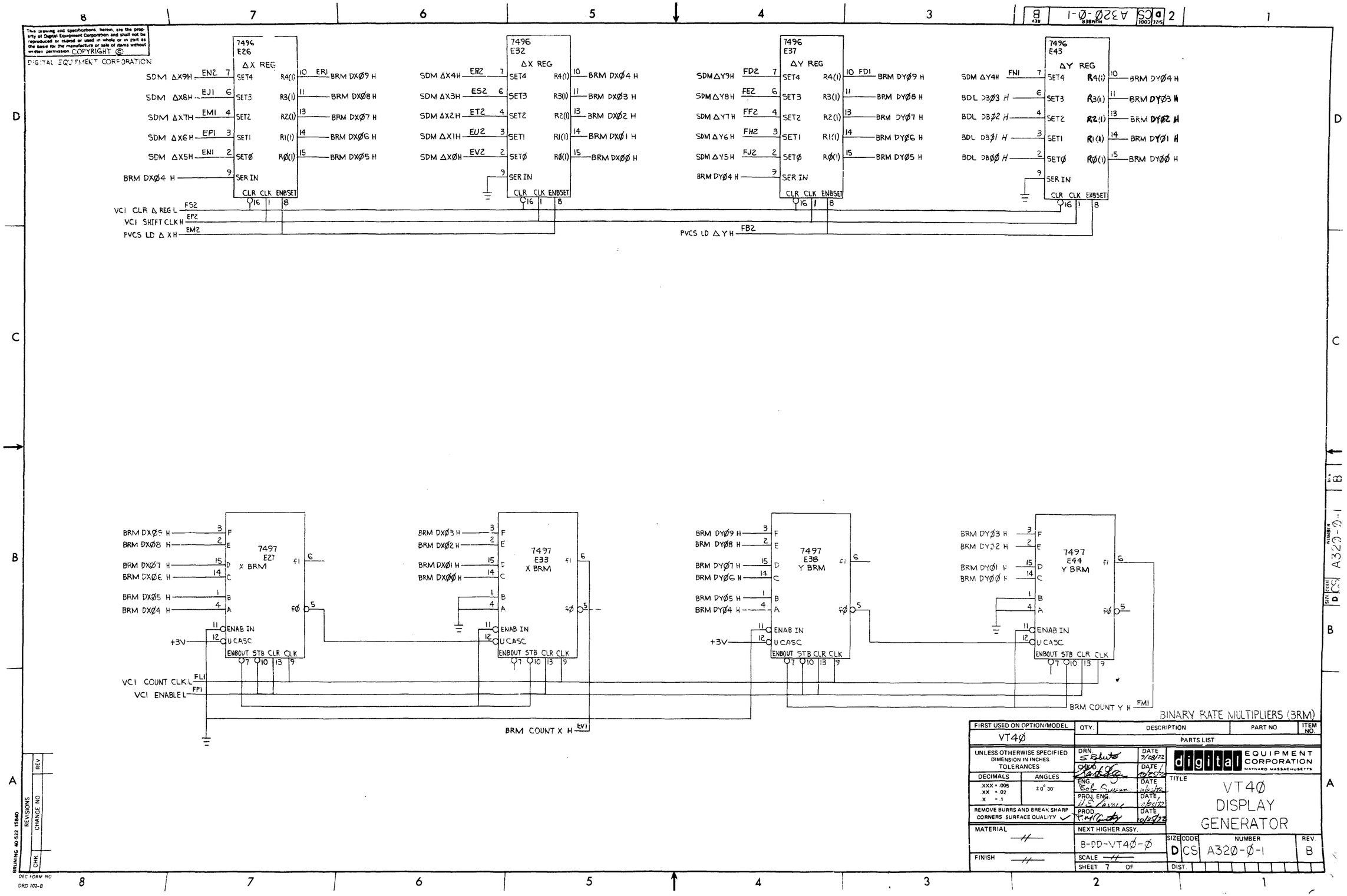

BINARY RATE MULTIPLIERS (BRM)

FIRST USED ON OPTION/MODEL	QTY.	DESCRIPTION	PART NO.	ITEM NO.
VT4Ø		PARTS LIST		

UNLESS OTHERWISE SPECIFIED DIMENSION IN INCHES. TOLERANCES

DECIMALS	ANGLES
.XXX = .005	±0° 30'
.XX = .02	
.X = .1	

REMOVE BURRS AND BREAK SHARP CORNERS SURFACE QUALITY ✓

MATERIAL —//—

FINISH —//—

		DATE
DRN.	S. Roberts	7/28/72
CHK'D.	[illegible]	10/25/72
ENG.	Bob Guenn	10/25/72
PROJ. ENG.	[illegible]	10/25/72
PROD.	[illegible]	10/25/72

NEXT HIGHER ASSY. B-DD-VT4Ø-Ø

SCALE —//—

SHEET 7 OF

digital EQUIPMENT CORPORATION MAYNARD MASSACHUSETTS

TITLE VT4Ø DISPLAY GENERATOR

SIZE	CODE	NUMBER	REV.
D	CS	A32Ø-Ø-1	B

DIST.

REVISIONS: CHK | CHANGE NO | REV

BRUNING 40-522 15840

DEC FORM NO DRD 102-B

This drawing and specifications, herein, are the property of Digital Equipment Corporation and shall not be reproduced or copied or used in whole or in part as the basis for the manufacture or sale of items without written permission. COPYRIGHT ©
DIGITAL EQUIPMENT CORPORATION

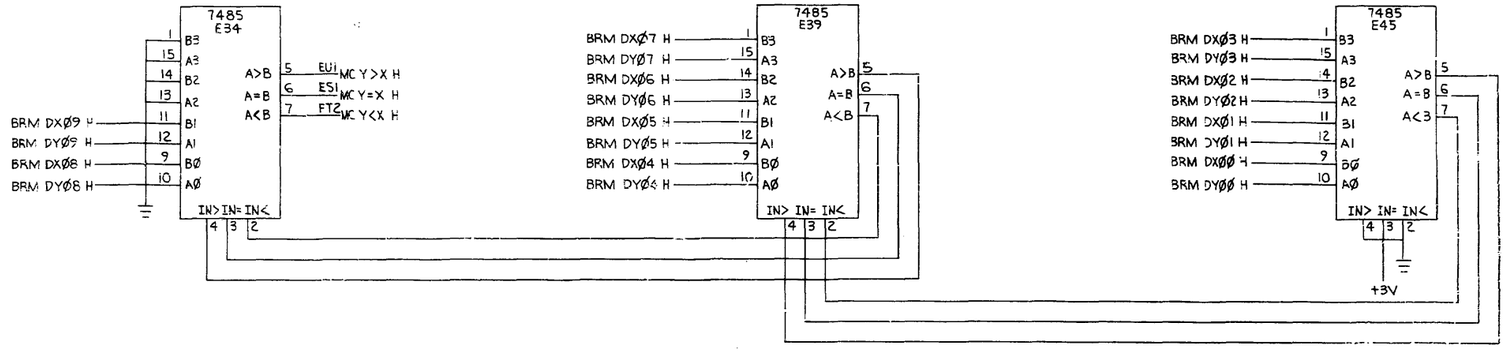

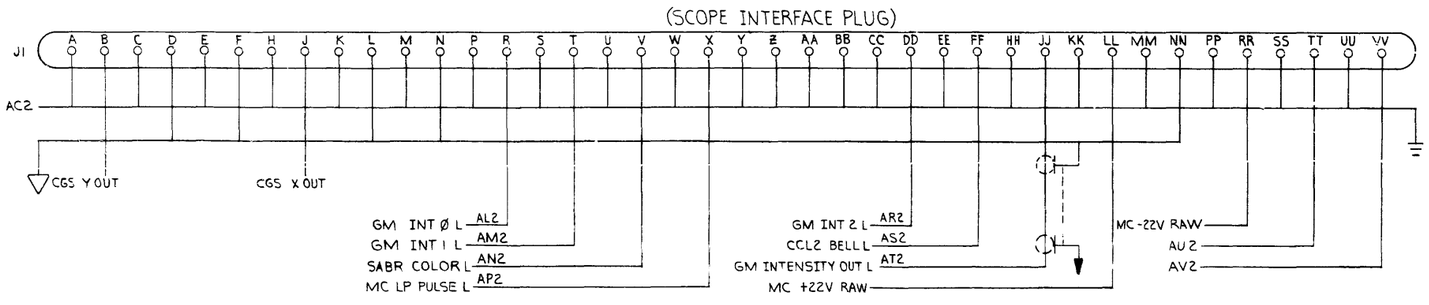

MAGNITUDE COMPARTORS (MC)

FIRST USED ON OPTION/MODEL	QTY.	DESCRIPTION	PART NO.	ITEM NO.
VT4Ø		PARTS LIST		

UNLESS OTHERWISE SPECIFIED DIMENSION IN INCHES. TOLERANCES

DECIMALS	ANGLES
.XXX ± .005	±0 30
.XX ± .02	
.X ± .1	

REMOVE BURRS AND BREAK SHARP CORNERS. SURFACE QUALITY ✓

MATERIAL —//—

FINISH —//—

DRN. S. Roberts	DATE 10/9/72	digital EQUIPMENT CORPORATION MAYNARD MASSACHUSETTS
CHK'D. [illegible]	DATE 10/25/72	
ENG. [illegible]	DATE 10/25/72	TITLE VT4Ø DISPLAY GENERATOR
PROJ. ENG. [illegible]	DATE 10/25/72	
PROD. [illegible]	DATE 10/25/72	
NEXT HIGHER ASSY. B-DD-VT4Ø-Ø		SIZE D CODE CS NUMBER A32Ø-Ø-1 REV B
SCALE —//—		
SHEET 8 OF		DIST.

REVISIONS | CHANGE NO. | REV | CHK

BRUNING 40 322 15840

DEC FORM NO DRD 102-B

This drawing and specifications, herein, are the property of Digital Equipment Corporation and shall not be reproduced or copied or used in whole or in part as the basis for the manufacture or sale of items without written permission. COPYRIGHT ©
DIGITAL EQUIPMENT CORPORATION

74157 E35
BRM DXØ8 H
BRM DYØ8 H
BRM DXØ9 H (ER1)
BRM DYØ9 H (FD1)
ΔX,Y MUX
VC1 CHAR + GRAPH MODE H FE1
MCYXH (FT2)

74157 E40
BRM DXØ4 H
BRM DYØ4 H
BRM DXØ5 H
BRM DYØ5 H
BRM DXØ6 H
BRM DYØ6 H
BRM DXØ7 H
BRM DYØ7 H
FC1 DCR 4 OUT H
FB1 DCR 5 OUT H

74157 E46
BRM DXØØ H
BRM DYØØ H
BRM DXØ1 H
BRM DYØ1 H
BRM DXØ2 H
BRM DYØ2 H
BRM DYØ3 H
BRM DXØ3 H
FH1 DCR Ø OUT H
FF1 DCR 1 OUT H
FV2 DCR 2 OUT H
FU2 DCR 3 OUT H

74157 E28
PCC 4 IN H EF1
INC 4 H EH1
PCC 5 IN H EK1
INC 5 H EL1
GRAPH OR
CHAR MUX

74157 E23
DCR Ø OUT H DM1
INC Ø H DS1
PCC 1 IN H DU1
INC 1 H DV1
PCC 2 IN H EF2
INC 2 H EH2
INC 3 H EK2
PCC 3 IN H EJ2
PVCS GRAPH L EL2

74191 E29 DOWN COUNT REG
EE1 DCR 8-9 Ø) H
+3V
EDI VC1 LOAD DOWN COUNT L

74191 E25 DOWN COUNT REG
ECI DCR 4-7 (Ø) H
+3V

74191 E24 DOWN COUNT REG
FRI DCR Ø-3 (Ø) H
+3V
VC2 DOWN COUNT CLK EE2

DOWN COUNT REGISTERS (DCR)

FIRST USED ON OPTION/MODEL	QTY.	DESCRIPTION	PART NO.	ITEM NO.
VT4Ø		PARTS LIST		

UNLESS OTHERWISE SPECIFIED DIMENSION IN INCHES. TOLERANCES
DECIMALS: XXX ± .005, XX ± .02, X ± .1 | ANGLES: ±0° 30'
REMOVE BURRS AND BREAK SHARP CORNERS. SURFACE QUALITY ✓
MATERIAL —
FINISH —

DRN Stabile DATE 10/6/72
CHK DATE
ENG. Bob Summa DATE 11/2/72
PROJ. ENG. H.C. Lemire DATE 10/30/72
PROD. Mac County DATE 10/31/72
NEXT HIGHER ASSY. B-DD-VT4Ø-Ø
SCALE —
SHEET 9 OF

digital EQUIPMENT CORPORATION MAYNARD MASSACHUSETTS

TITLE
VT4Ø
DISPLAY
GENERATOR

SIZE D | CODE CS | NUMBER A32Ø-Ø-1 | REV B
DIST

BRUNING 40-522 15840
REVISIONS | CHANGE NO. | CHK | REV
DEC FORM NO. DRD 102-B

This drawing and specifications, herein, are the property of Digital Equipment Corporation and shall not be reproduced or copied or used in whole or in part as the basis for the manufacture or sale of items without written permission. COPYRIGHT ©
DIGITAL EQUIPMENT CORPORTION

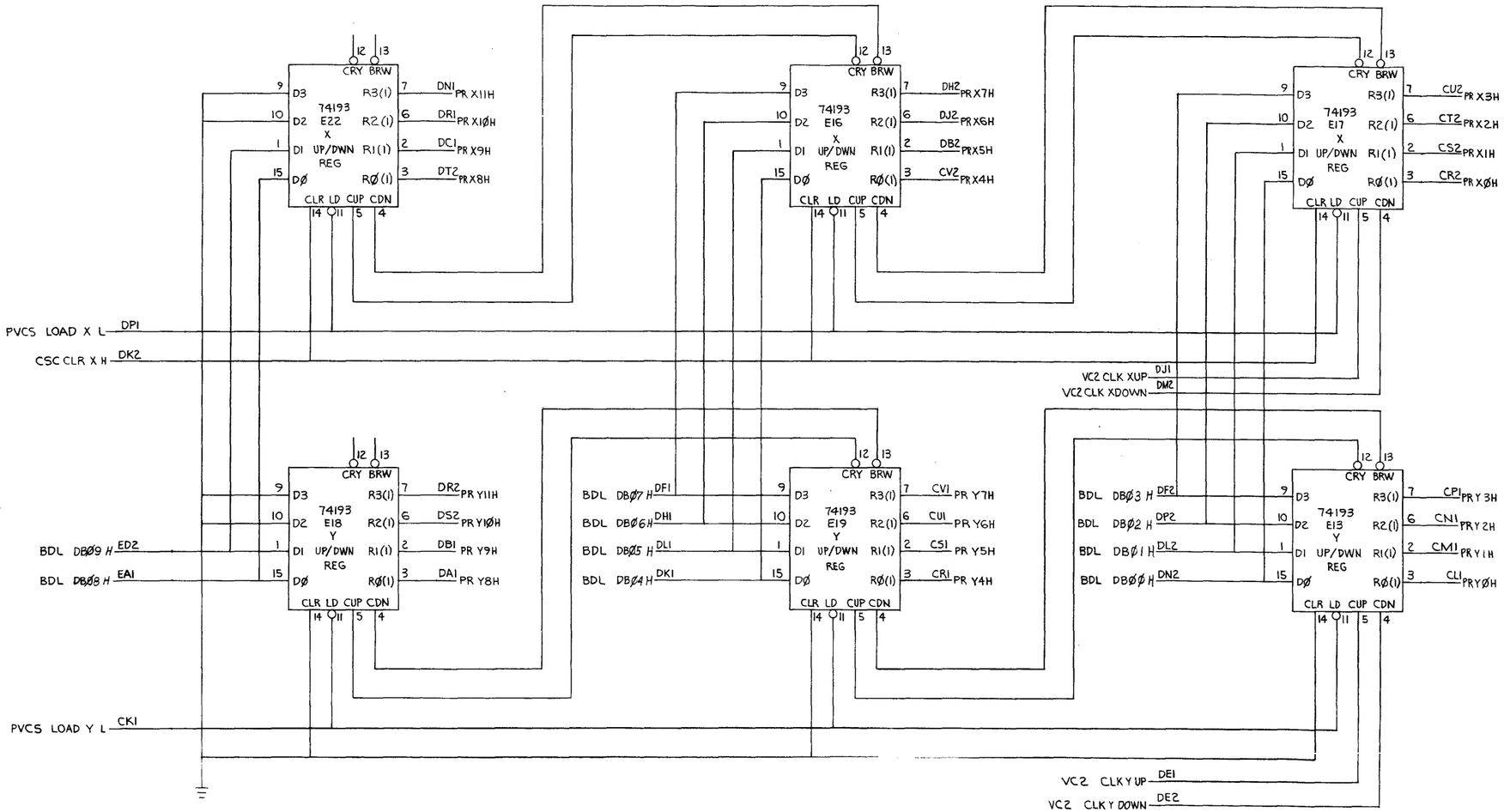

POSITION REGISTERS (PR)

FIRST USED ON OPTION/MODEL	QTY.	DESCRIPTION	PART NO.	ITEM NO.
VT4Ø		PARTS LIST		

UNLESS OTHERWISE SPECIFIED DIMENSION IN INCHES. TOLERANCES

DECIMALS	ANGLES
.XXX = .005	±0° 30'
.XX = .02	
.X = .1	

REMOVE BURRS AND BREAK SHARP CORNERS SURFACE QUALITY ✓

MATERIAL —//—

FINISH —//—

DRN. S. Roberts DATE 10/3/72
CHKD. [signature] DATE 10/25/72
ENG. [signature] DATE
PROJ. ENG. DATE
PROD. [signature] DATE 10/3/72

NEXT HIGHER ASSY. B-DD-VT4Ø-Ø

SCALE —//—

SHEET 10 OF

digital EQUIPMENT CORPORATION MAYNARD MASSACHUSETTS

TITLE VT4Ø DISPLAY GENERATOR

SIZE	CODE	NUMBER	REV.
D	CS	A32Ø-Ø-1	B

DIST.

REVISIONS: CHK | CHANGE NO | REV

BRUNING 40-522 1584

DEC FORM NO DRD 102-B

This drawing and specifications, herein, are the property of Digital Equipment Corporation and shall not be reproduced or copied or used in whole or in part as the basis for the manufacture or sale of items without written permission. COPYRIGHT ©

DIGITAL EQUIPMENT CORPORATION

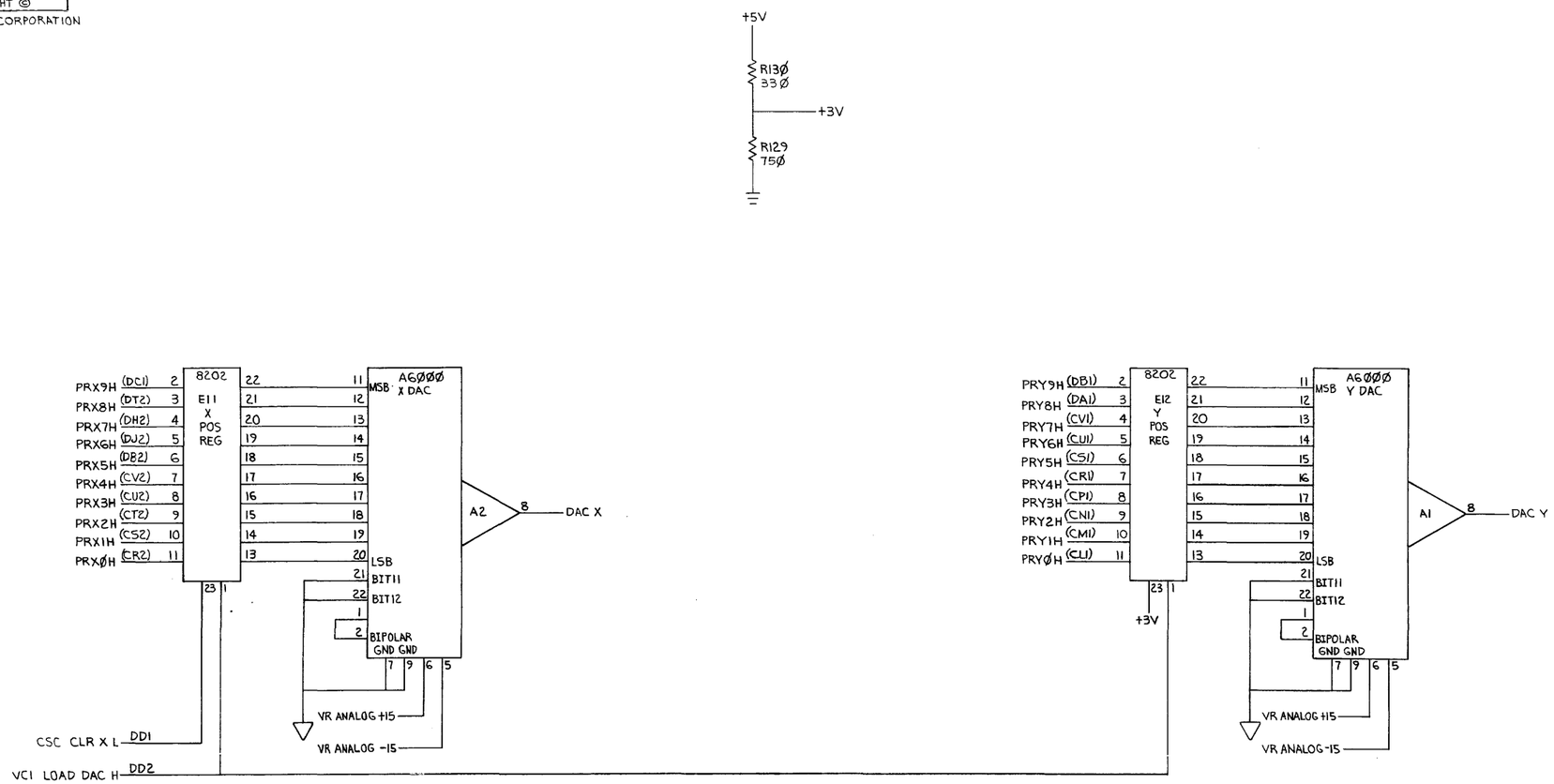

DIGITAL TO ANALOG CONVERTERS (DAC)

FIRST USED ON OPTION/MODEL	QTY.	DESCRIPTION	PART NO.	ITEM NO.
VT4Ø		PARTS LIST		

UNLESS OTHERWISE SPECIFIED DIMENSION IN INCHES. TOLERANCES

DECIMALS	ANGLES
.XXX = .005 .XX = .02 .X = .1	±0° 30'

REMOVE BURRS AND BREAK SHARP CORNERS SURFACE QUALITY ✓

MATERIAL —//—

FINISH —//—

DRN. S. Roberts	DATE 10/10/72	digital EQUIPMENT CORPORATION MAYNARD MASSACHUSETTS
CHK'D	DATE 10/27/72	
ENG.	DATE	TITLE VT4Ø DISPLAY GENERATOR
PROJ. ENG.	DATE 10/25/72	
PROD.	DATE 10/27/72	
NEXT HIGHER ASSY. B-DD-VT4Ø-Ø		SIZE D CODE CS NUMBER A32Ø-Ø-1 REV. B
SCALE —//—		
SHEET 11 OF		DIST.

REVISIONS: CHK | CHANGE NO. | REV

BRUNING 40-522 15840

DEC FORM NO DRD 102-B

DIGITAL EQUIPMENT CORPORATION
MAYNARD, MASSACHUSETTS

PARTS LIST

MADE BY C.MCCOY DATE 10/16/72	CHECKED R K Cialek DATE 10-22-72	SECTION 1
ENG R K Cialek DATE 10-23-72	PROD D.M.McCarthy DATE 10/24/72	ISSUED SECT.

ITEM NO.	DWG NO. / PART NO.	DESCRIPTION	QUANTITY / VARIATION VT4Ø-AA	VT4Ø-AB	VT4Ø-BA	VT4Ø-BB
1	D-UA-11Ø5-MA-Ø	16 BIT COMPUTER ASSY (PDP11Ø5) 115V	-	-	1	-
2	D-UA-11Ø5-MB-Ø	16 BIT COMPUTER ASSY (PDP11Ø5) 230V	-	-	-	1
3	D-UA-11Ø5-PA-Ø	16 BIT COMPUTER ASSY (PDP11Ø5) 115V	1	-	-	-
4	D-UA-11Ø5-PB-Ø	16 BIT COMPUTER ASSY (PDP11Ø5) 23ØV	-	1	-	-
5	D-IA-7409966-0-0	COVER PANEL, REAR BOTTOM	1	1	1	1
6	9009019-3	SCREW, PHL TRUSS HD #10-32 x .25 LG	4	4	4	4
7	D-MD-7409971-1-0	EXTRUSION, SIDE (L.H.)	1	1	1	1
8	D-MD-7409971-2-0	EXTRUSION, SIDE (R.H.)	1	1	1	1
9	9009266	WASHER, FINISHING	4	4	4	4
10	9006035-2	SCREW, PHL FLT HD #8-32 x .25 LG	4	4	4	4
* 11	C-CS-M7Ø13-Ø-1	BUS CONTROL	1	1	1	1
* 12	C-CS-M7Ø14-Ø-1	DISPLAY CONTROL	1	1	1	1
* 13	C-CS-A32Ø-Ø-1	VECTOR GENERATOR	1	1	1	1

* SEE DWG. NO. D-MU-VT4Ø-Ø-1 FOR APPLICATION.

TITLE	ASSY NO.	SIZE	CODE	NUMBER	REV.	ECO NO.
VT4Ø COMPUTER ASSY	/	A	PL	VT4Ø-Ø-Ø		
	SHEET 1 OF 1	DIST.	G			

DEC FORM DEC 16-4525-1031-N870
DRA 110

This drawing and specifications, herein, are the property of Digital Equipment Corporation and shall not be reproduced or copied or used in whole or in part as the basis for the manufacture or sale of items without written permission. 1972

LEGEND	
NUMBER	VARIATION
7008930-1	115V 60 HZ
7008930-2	230V 50 HZ

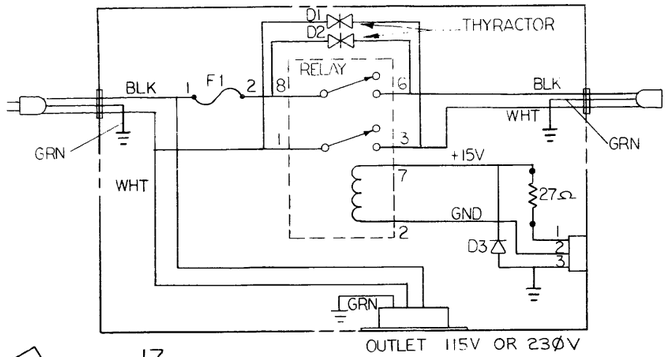

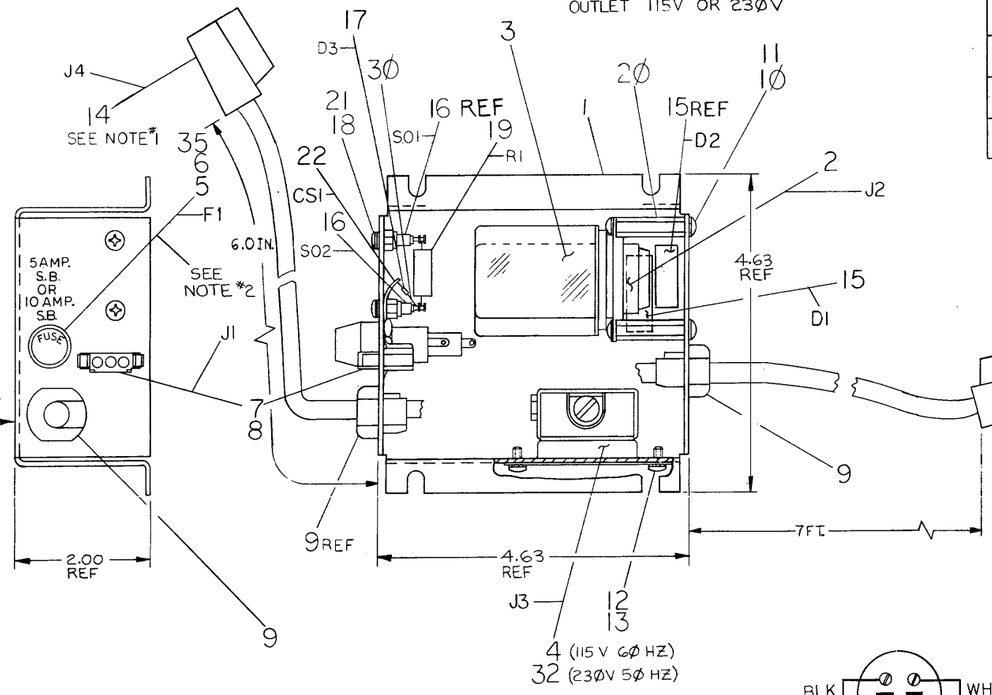

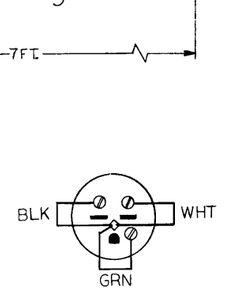

PLUG WIRING (P1)
(COVER REMOVED)
ITEM *33 230V OPER.

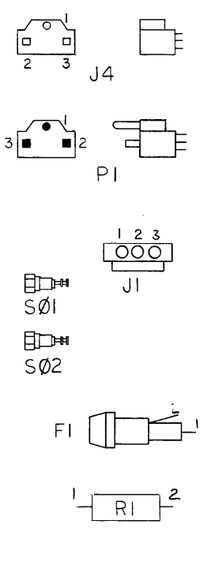

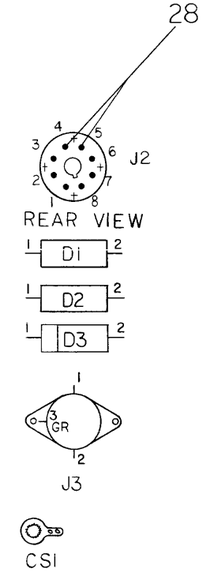

WIRE TABLE

ITEM NO.	DESCRIPTION AWG.	DESCRIPTION COLOR	FROM CONNECTION	FROM WITH	TO CONNECTION	TO WITH	REMARKS
14	14	GRN	J4-1	—	CS1	SOLD	
23	18	GRN	J1-3	8	CS1	SOLD	
14	14	BLK	J4-2	—	J2-6	SOLD,28	
14	14	WHT	J4-3	—	J2-3	SOLD,28	
24	18	ORN	J1-1	8	SO-1	SOLD	
24	18	ORN	SO-2	SOLD	J2-7	SOLD,28	
25	18	BLU	J1-2	8	J2-2	SOLD,28	
14	14	GRN	P1-1	—	J3-3	29	
14	14	WHT	P1-3	—	J3-1	29	
14	14	BLK	P1-2	—	J3-2	29	
27	14	BLK	F1-1	SOLD,28	J3-2	29	
26	14	WHT	J2-1	SOLD,28	J3-1	29	
27	14	BLK	F1-2	SOLD,28	J2-8	SOLD,28	
15	—	—	D1-1	—	J2-1	SOLD 28,30	
			D1-2	—	J2-3		
15	—	—	D2-1	—	J2-8		
			D2-2	—	J2-6	SOLD 28,30	
17	—	—	D3-1	—	SO-2	SOLD	
			D3-2	—	CS-1	SOLD	
19	—	—	R1-1	—	SO-1	SOLD,30	
			R1-2	—	SO-2	SOLD,30	

NOTES:

1. CUT ITEM #14 (POWER CORD) APPROXIMATELY 13.0 IN. FROM RECEPTACLE (J4) AND INSTALL EACH PIECE AS INDICATED IN WIRE TABLE.
2. WHEN THE SYSTEM IS 230V, ITEM #14 IS REMOVED AND ITEM #33 IS WIRED TO REMAINING CORD USING DIAGRAM SHOWN. ITEM #4 (RECEPT.) IS REPLACED BY ITEM #32. ITEM #6 IS REPLACED BY ITEM #35. ADD APPROPRIATE DECALS WHERE SHOWN.

7008930-2	7008930-1			
1	—	FUSE 5 AMP S.B.	9007222	35
A/R	A/R	DECALS	7408407	34
1	—	PLUG, HUBBELL *5666 230V	9008853	33
1	—	OUTLET, HUBBELL *5656 230V	9008470	32
A/R	A/R	TIE WRAP *SST2-M PANDUIT	9007032	31
A/R	A/R	TUBING, THINWAL TEF BLK	9107259-00	30
5	5	CONN. SOLD. *50364 ARK LESS	9007928	29
A/R	A/R	TUBING SHRINKABLE RED	9107305-02	28
A/R	A/R	WIRE #14 AWG IPVC INS BLK	9107370-00	27
A/R	A/R	WIRE #14 AWG IPVC INS WHT	9107370-99	26
A/R	A/R	WIRE #18 AWG IPVC INS. BLU	9107360-66	25
A/R	A/R	WIRE #18 AWG IPVC INS. ORN	9107360-33	24
A/R	A/R	WIRE #18 AWG IPVC INS. GRN	9107360-55	23
1	1	CONN. #2102-0600 SHAKEPROOF	9006765	22
2	2	WASHER INT TOOT LOCK #4	9006632	21
2	2	SPACER 1/4 AF x 1" LG #6-32	9006862	20
1	1	RESISTOR 27Ω 2W 10%	1305624	19
2	2	SCREW, PHL PAN HD #4-40x3/16	9008032-1	18
1	1	DIODE #DG72	1105275	17
2	2	STAND-OFF, PORCELAIN	9006965	16
2	2	THYRACTOR #GRS20SP484	1100106	15
1	1	POWER CORD	9107673-9	14
2	2	WASHER, INT TOOTH LOCK #8	9006634	13
2	2	SCREW, PHL PAN HD #8-32X1/4	9006035-1	12
4	4	WASHER, INT. TOOTH LOCK #6	9006633	11
4	4	SCREW, PHL HD PAN #6-32 x3/8	9006022-1	10
2	2	BUSHING, STRAIN RELIEF	9008492-1	9
3	3	PIN, MATE-N-LOCK FEMALE	1209378-01	8
1	1	CONN., MATE-N-LOCK 3 PIN	1209350-3	7
—	1	FUSE 10AMP S.B.	9007225	6
1	1	FUSE HOLDER	9007242	5
—	1	OUTLET, HUBBELL 15A. 125 V	1210761	4
1	1	RELAY, P&B. KRP11DG 12V DC	1203431	3
1	1	OCTAL SOCKET 8 EM	1201244	2
1	1	BOX, POWER CONTROL	D-IA-7409765-0-0	1

PARTS LIST

QTY.	DESCRIPTION	PART NO.	ITEM NO.

FIRST USED ON OPTION/MODEL	UNLESS OTHERWISE SPECIFIED DIMENSION IN INCHES. TOLERANCES		DRN.	DATE	digital EQUIPMENT CORPORATION MAYNARD MASSACHUSETTS
GT40	DECIMALS	ANGLES	CHK'D.	DATE 7-8-72	TITLE
	.XXX ± .005 .XX ± .02 .X ± .1	±0° 30'	ENG	DATE	POWER CONTROL ASS'Y
	REMOVE BURRS AND BREAK SHARP CORNERS SURFACE QUALITY ✓		PROJ. ENG.	DATE 8-26-72	
			PROD.	DATE 8-28-72	
MATERIAL: SEE PARTS LIST	NEXT HIGHER ASSY.: D-UA-GT40-0-0		SIZE D	CODE AD	NUMBER 7008930-0-0	REV. A
FINISH	SCALE 1/1	SHEET OF	DIST.		

REVISIONS			
REV.	CHANGE NO.	CHK	
A	GT40-00002		AC FILE. 10-19-72

BRUNING 40-107 15968
DEC FORM NO DRD 100-A

REV A
NUMBER 7008930-0-0
SIZE CODE D AD

This drawing and specifications, herein, are the property of Digital Equipment Corporation and shall not be reproduced or copied or used in whole or in part as the basis for the manufacture or sale of items without written permission.

SN7413 1909933
DUAL NAND SCHMITT TRIGGER

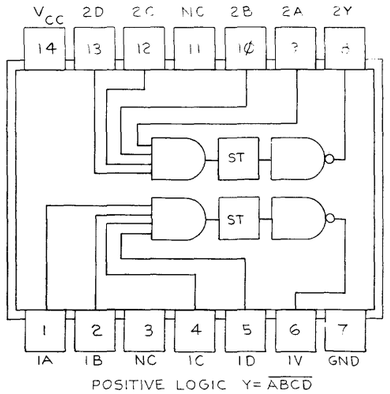

POSITIVE LOGIC $Y = \overline{ABCD}$

SN74157 1910655
QUAD 2 TO 1 MULTIPLEXER

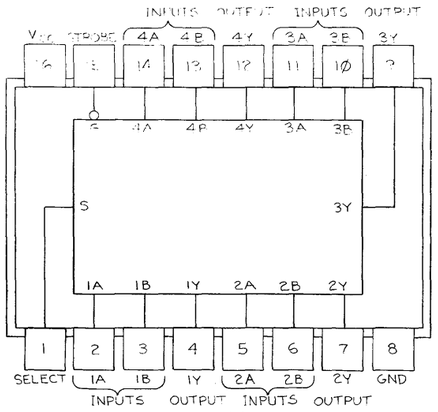

INPUTS				OUTPUT
STROBE	SELECT	A	B	Y
H	X	X	X	L
L	L	L	X	L
L	L	H	X	H
L	H	X	L	L
L	H	X	H	H

POSITIVE LOGIC:
LOW LOGIC LEVEL AT S SELECTS A INPUTS.
HIGH LOGIC LEVEL AT S SELECTS B INPUTS.

SN 7496 1910363 5-BIT SHIFT REG.

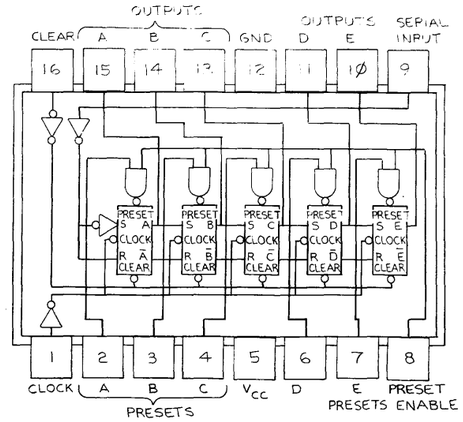

SN7493 1909054 4-BIT BINARY COUNTER

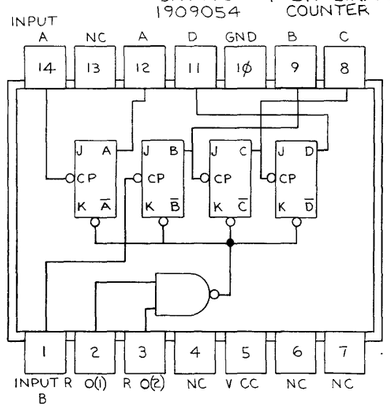

COUNT	OUTPUT D	C	B	A
Ø	0	0	0	0
1	0	0	0	1
2	0	0	1	0
3	0	0	1	1
4	0	1	0	0
5	0	1	0	1
6	0	1	1	0
7	0	1	1	1
8	1	0	0	0
9	1	0	0	1
10	1	0	1	0
11	1	0	1	1
12	1	1	0	0
13	1	1	0	1
14	1	1	1	0
15	1	1	1	1

SN7485 1910224 4-BIT MAGNITUDE COMPARATOR

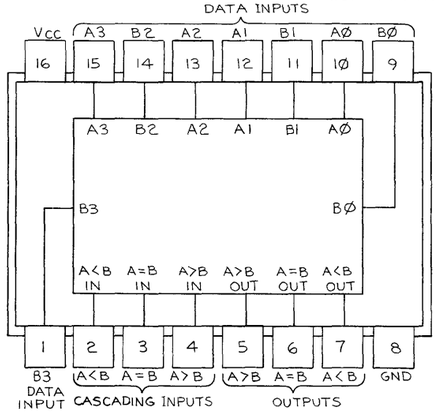

COMPARING INPUTS			CASCADING INPUTS			OUTPUTS		
A3, B3	A2, B2	A1, B1	AØ, BØ	A>B	A<B	A=B	A>B	A<B	A=B
A3>B3	X	X	X	X	X	X	H	L	L
A3<B3	X	X	X	X	X	X	L	H	L
A3=B3	A2>B2	X	X	X	X	X	H	L	L
A3=B3	A2<B2	X	X	X	X	X	L	H	L
A3=B3	A2=B2	A1>B1	X	X	X	X	H	L	L
A3=B3	A2=B2	A1<B1	X	X	X	X	L	H	L
A3=B3	A2=B2	A1=B1	AØ>BØ	X	X	X	H	L	L
A3=B3	A2=B2	A1=B1	AØ<BØ	X	X	X	L	H	L
A3=B3	A2=B2	A1=B1	AØ=BØ	H	L	L	H	L	L
A3=B3	A2=B2	A1=B1	AØ=BØ	L	H	L	L	H	L
A3=B3	A2=B2	A1=B1	AØ=BØ	L	L	H	L	L	H

SN74191 1910096 SYNC UP/DWN COUNTER

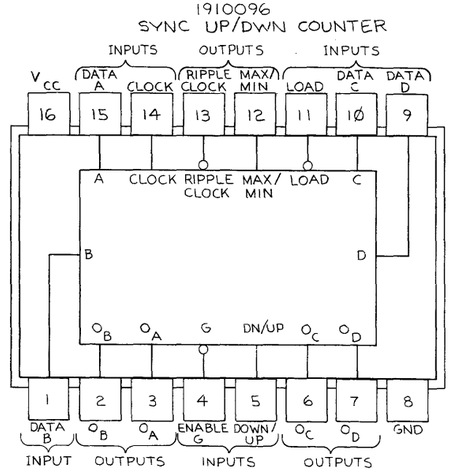

ASYNCHRONOUS INPUTS: LOW INPUTS TO LOAD SETS $Q_A = A$, $Q_B = B$, $Q_C = C$, AND $Q_D = D$

SN74193 1910098 4-BIT UP/DWN COUNTER

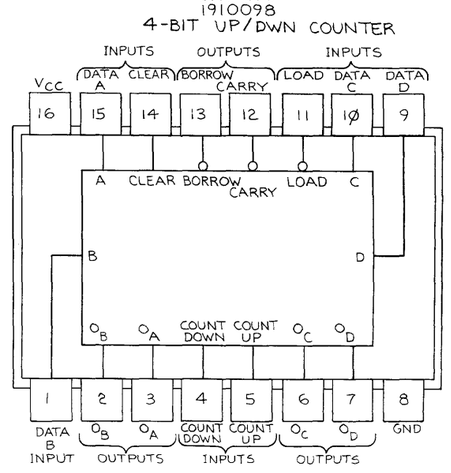

LOGIC: LOW INPUTS TO LOAD SETS $Q_A = A$, $Q_B = B$, $Q_C = D$ AND $Q_D = D$

REV.	REVISIONS	CHANGE NO	CHK

BRUNING 40-107 1986

DEC FORM NO DRD 100-A

FIRST USED ON OPTION/MODEL	QTY.	DESCRIPTION	PART NO.	ITEM NO.
GT40		PARTS LIST		

UNLESS OTHERWISE SPECIFIED DIMENSION IN INCHES. TOLERANCES
DECIMALS: XXX ± .005, XX ± .02 — ANGLES: ± 0° 30'
REMOVE BURRS AND BREAK SHARP CORNERS SURFACE QUALITY ✓
MATERIAL —"—
FINISH —"—

DRN. — DATE 9-26-72
CHK'D. — DATE
ENG. — DATE
PROJ. ENG. — DATE
PROD. — DATE 11/24/72
NEXT HIGHER ASSY. B-DD-GT40-0

digital EQUIPMENT CORPORATION MAYNARD MASSACHUSETTS

TITLE: BASE DIAGRAMS

SIZE D | CODE SP | NUMBER GT40-0-2 | REV.
SCALE —"—
SHEET 1 OF 4
DIST.

This drawing and specifications, herein, are the property of Digital Equipment Corporation and shall not be reproduced or copied or used in whole or in part as the basis for the manufacture or sale of items without written permission.

SN74155
1909257
DUAL 4 TO 1 MULTIPLEXER

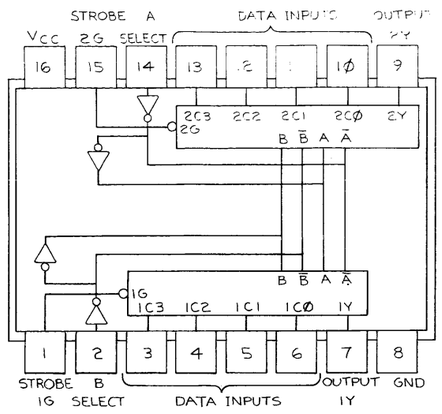

ADDRESS INPUTS		DATA INPUTS				STROBE	OUTPUT
B	A	C0	C1	C2	C3	G	Y
X	X	X	X	X	X	H	L
L	L	X	X	X	X	L	L
L	L	H	X	X	X	L	H
L	H	X	L	X	X	L	L
L	H	X	H	X	X	L	H
H	L	X	X	L	X	L	L
H	L	X	X	H	X	L	H
H	H	X	X	X	L	L	L
H	H	X	X	X	H	L	H

SN74154
1909701
4 TO 16 DECODER / DEMULTIPLEXER

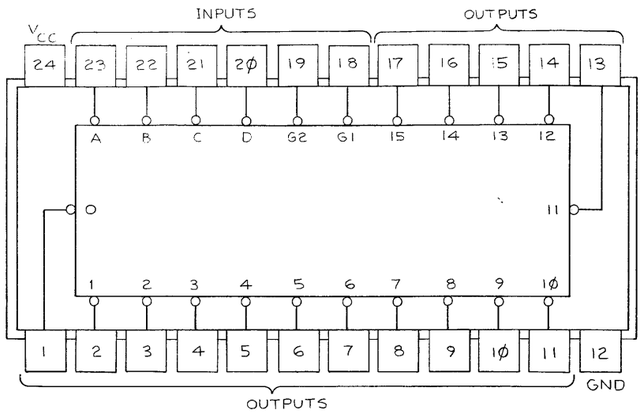

INPUTS						OUTPUTS														
G1	G2	D	C	B	A	Ø	1	2	3	4	5	6	7	8	9	10	11	12	13	14	15
L	L	L	L	L	L	L	H	H	H	H	H	H	H	H	H	H	H	H	H	H	H
L	L	L	L	L	H	H	L	H	H	H	H	H	H	H	H	H	H	H	H	H	H
L	L	L	L	H	L	H	H	L	H	H	H	H	H	H	H	H	H	H	H	H	H
L	L	L	L	H	H	H	H	H	L	H	H	H	H	H	H	H	H	H	H	H	H
L	L	L	H	L	L	H	H	H	H	L	H	H	H	H	H	H	H	H	H	H	H
L	L	L	H	L	H	H	H	H	H	H	L	H	H	H	H	H	H	H	H	H	H
L	L	L	H	H	L	H	H	H	H	H	H	L	H	H	H	H	H	H	H	H	H
L	L	L	H	H	H	H	H	H	H	H	H	H	L	H	H	H	H	H	H	H	H
L	L	H	L	L	L	H	H	H	H	H	H	H	H	L	H	H	H	H	H	H	H
L	L	H	L	L	H	H	H	H	H	H	H	H	H	H	L	H	H	H	H	H	H
L	L	H	L	H	L	H	H	H	H	H	H	H	H	H	H	L	H	H	H	H	H
L	L	H	L	H	H	H	H	H	H	H	H	H	H	H	H	H	L	H	H	H	H
L	L	H	H	L	L	H	H	H	H	H	H	H	H	H	H	H	H	L	H	H	H
L	L	H	H	L	H	H	H	H	H	H	H	H	H	H	H	H	H	H	L	H	H
L	L	H	H	H	L	H	H	H	H	H	H	H	H	H	H	H	H	H	H	L	H
L	L	H	H	H	H	H	H	H	H	H	H	H	H	H	H	H	H	H	H	H	L
L	H	X	X	X	X	H	H	H	H	H	H	H	H	H	H	H	H	H	H	H	H
H	L	X	X	X	X	H	H	H	H	H	H	H	H	H	H	H	H	H	H	H	H
H	H	X	X	X	X	H	H	H	H	H	H	H	H	H	H	H	H	H	H	H	H

SN7497
1911195
BINARY RATE MULTIPLEXER

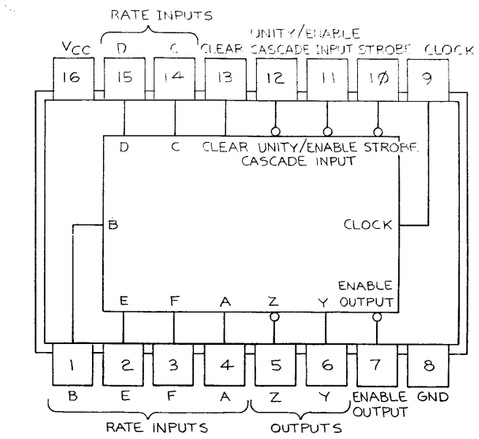

INPUTS							OUTPUTS			
CLEAR	ENABLE	STROBE	BINARY RATE F E D C B A	NUMBER OF CLOCK PULSES	UNITY / CASCADE	LOGIC LEVEL OR NUMBER OF PULSES Y	Z	ENABLE	NOTES
H	X	H	X X X X X X	X	H	L	H	H	B
L	L	L	L L L L L L	64	H	L	H	L	C
L	L	L	L L L L L H	64	H	1	1	1	C
L	L	L	L L L L H L	64	H	2	2	1	C
L	L	L	L L L H L L	64	H	4	4	1	C
L	L	L	L L H L L L	64	H	8	8	1	C
L	L	L	L H L L L L	64	H	16	16	1	C
L	L	L	H L L L L L	64	H	32	32	1	C
L	L	L	H H H H H H	64	H	63	63	1	C
L	L	L	H H H H H L	64	H	H	63	1	E
L	L	L	H L H H L L	64	L	H	40	1	E

9602
1910951
2602
1910257
MONOSTABLE ONE SHOTS

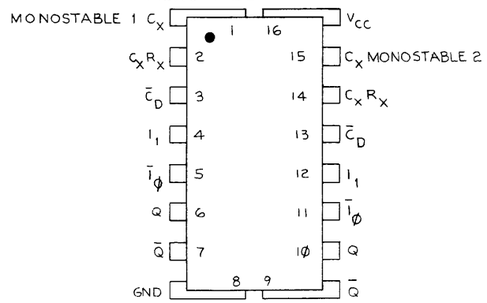

8838
9011117
BUS XCEIVER

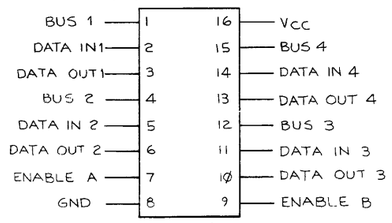

8202
1910275
10 BIT BUFFER

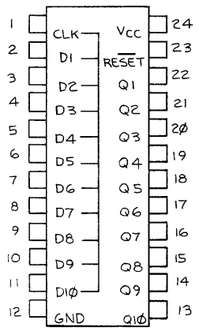

SN75451A
1910406
POSITIVE - AND DRIVER

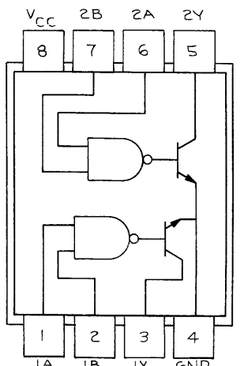

POSITIVE LOGIC: Y=AB

FIRST USED ON OPTION/MODEL	QTY.	DESCRIPTION	PART NO.	ITEM NO.
GT40		PARTS LIST		

UNLESS OTHERWISE SPECIFIED DIMENSION IN INCHES. TOLERANCES
DECIMALS: .XXX = .005, .XX = .02, .X = .1 | ANGLES: ±0° 30'
REMOVE BURRS AND BREAK SHARP CORNERS SURFACE QUALITY ✓

DRN. CMG	DATE 9-25-72	digital EQUIPMENT CORPORATION MAYNARD MASSACHUSETTS
CHK'D.	DATE	
ENG.	DATE	
PROJ. ENG.	DATE	
PROD. PM/mutty	DATE 10/24/72	

MATERIAL —
FINISH —
NEXT HIGHER ASSY. B-DD-GT40-0
SCALE —
SHEET 2 OF 4

TITLE: BASE DIAGRAMS

SIZE	CODE	NUMBER	REV.
D	SP	GT40-0-2	

DIST

REV.	REVISIONS	CHK.	CHANGE NO.

BRUNING 40-107 15968
DEC FORM NO DRD 100-A

REV | SIZE CODE | NUMBER
D | SP | GT40-0-2

This drawing and specifications, herein, are the property of Digital Equipment Corporation and shall not be reproduced or copied or used in whole or in part as the basis for the manufacture or sale of items without written permission.

IM5603
23000A2-03
PROGRAMABLE READ ONLY MEMORY

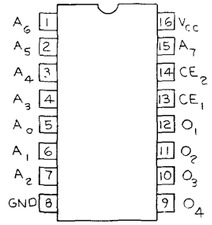

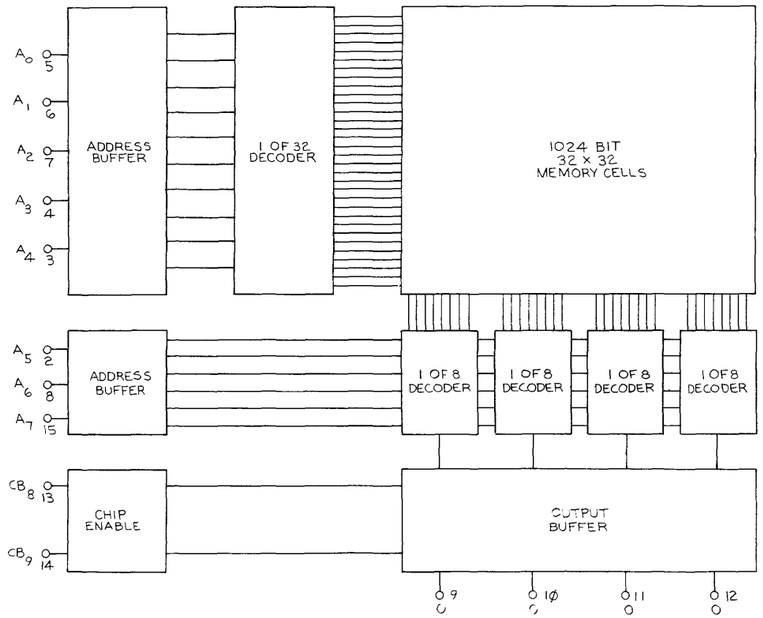

SN74155
1910656
2 TO 4 DECODER / DEMULTIPLEXER

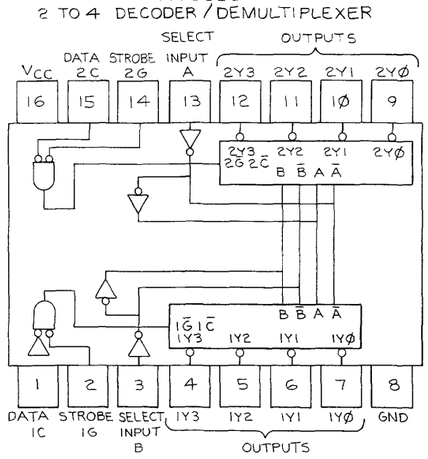

INPUTS				OUTPUTS			
SELECT		STROBE	DATA				
B	A	1G	1C	1Y0	1Y1	1Y2	1Y3
X	X	H	X	H	H	H	H
L	L	L	H	L	H	H	H
L	H	L	H	H	L	H	H
H	L	L	H	H	H	L	H
H	H	L	H	H	H	H	L
X	X	X	L	H	H	H	H

UART
1910459
UNIVERSAL ASYNC. RECEIVER TRANSMITTER

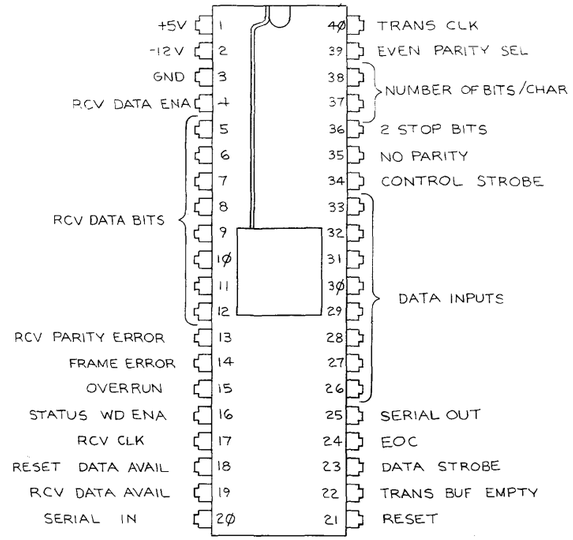

SN74174
1910652 HEX D-TYPE FF'S

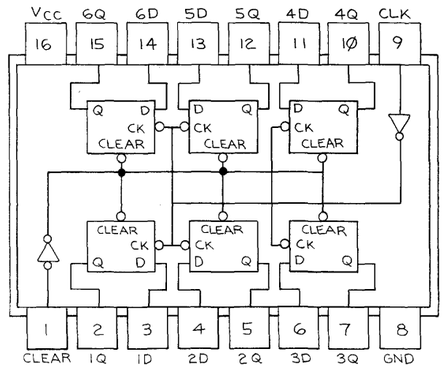

POSITIVE LOGIC: SEE FUNCTION TABLE

SN74175
1910651
QUAD D-TYPE FF'S

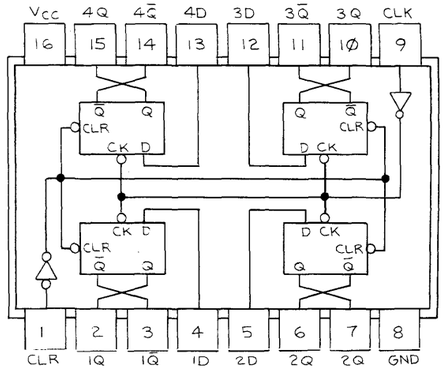

POSITIVE LOGIC: SEE FUNCTION TABLE

FIRST USED ON OPTION/MODEL	QTY.	DESCRIPTION	PART NO.	ITEM NO.
GT40		PARTS LIST		

UNLESS OTHERWISE SPECIFIED DIMENSION IN INCHES. TOLERANCES

DECIMALS	ANGLES
.XXX ± .005	±0° 30'
.XX ± .02	
X ± 1	

REMOVE BURRS AND BREAK SHARP CORNERS SURFACE QUALITY ✓

MATERIAL —//—

FINISH —//—

DRN. CBMcCoy DATE 9-25-72
CHK'D. DATE
ENG. DATE
PROJ. ENG. DATE
PROD. R. McCarthy DATE 10/24/72
NEXT HIGHER ASSY. B-DL GT40
SCALE —//—
SHEET 3 OF 4

digital EQUIPMENT CORPORATION MAYNARD MASSACHUSETTS

TITLE BASE DIAGRAMS

SIZE D CODE SP NUMBER GT40-0-2 REV.

DIST.

REVISIONS: REV | CHANG. NO. | CHK

BRUNING 40-107 15966

DEC FORM NO DRD 100-A

This drawing and specifications, herein, are the property of Digital Equipment Corporation and shall not be reproduced or copied or used in whole or in part as the basis for the manufacture or sale of items without written permission

SIZE D | CODE SP | NUMBER GT40-0-2 | REV

SN74123
1910436

RETRIGGERABLE MONOSTABLE MULTIVIBRATOR

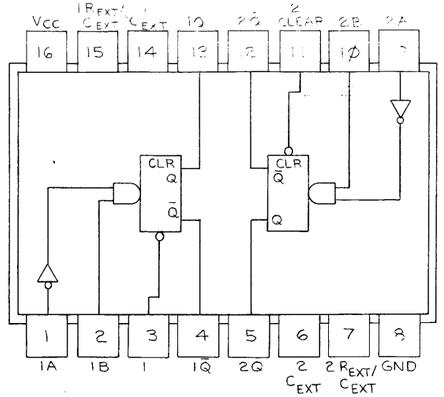

POSITIVE LOGIC
LOW INPUT TO CLEAR RESETS Q TO LOW LEVEL AND INHIBITS DATA INPUTS.

SN7483
1909236

4-BIT BINARY FULL ADDER

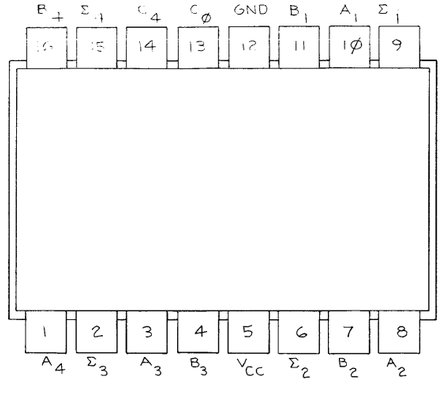

INPUT				OUTPUT					
				WHEN $C_0=0$			WHEN $C_0=1$		
						WHEN $C_2=0$			WHEN $C_2=1$
A_1 / A_3	B_1 / B_3	A_2 / A_4	B_2 / B_4	Σ_1 / Σ_3	Σ_2 / Σ_4	C_2 / C_4	Σ_1 / Σ_3	Σ_2 / Σ_4	C_2 / C_4
0	0	0	0	0	0	0	1	0	0
1	0	0	0	1	0	0	0	1	0
0	1	0	0	1	0	0	0	1	0
1	1	0	0	0	1	0	1	1	0
0	0	1	0	0	1	0	1	1	0
1	0	1	0	1	1	0	0	0	1
0	1	1	0	1	1	0	0	0	1
1	1	1	0	0	0	1	1	0	1
0	0	0	1	0	1	0	1	1	0
1	0	0	1	1	1	0	0	0	1
0	1	0	1	1	1	0	0	0	1
1	1	0	1	0	0	1	1	0	1
0	0	1	1	0	0	1	1	0	1
1	0	1	1	0	1	1	0	1	1
0	1	1	1	0	1	1	0	1	1
1	1	1	1	1	0	1	1	0	1

DEC741C
1910298

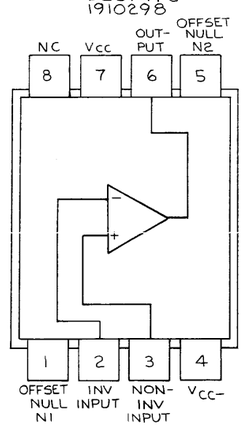

DEC 30LAN
1910282

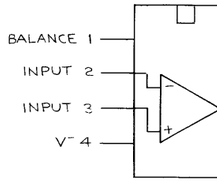

NH0002CN
1910446

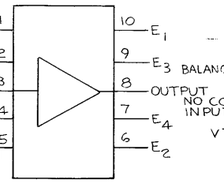

LM310
1910235

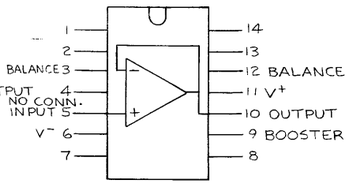

NOTE: PIN 6 CONNECTED TO BOTTOM OF PACKAGE.

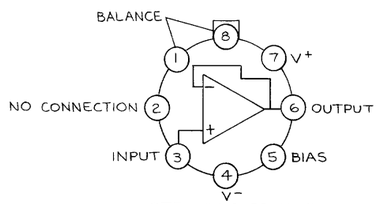

NOTE: PIN 4 CONNECTED TO CASE.

LM302
1909343

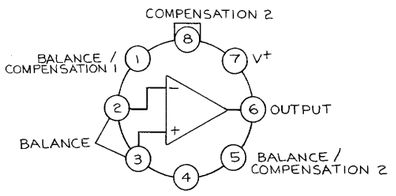

LM318
1910735

2N5245
1509681

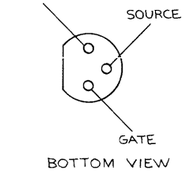

BOTTOM VIEW

MJE 2955
1510556
MJE 3055
1510555

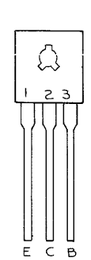

2N4250
1509142
DEC6534-B
1503409-01

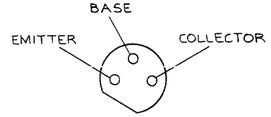

REVISIONS	REV.	CHK
CHANGE NO.		

BRUNING 40-107 15968
DEC FORM NO DRD 100-A

FIRST USED ON OPTION/MODEL	QTY.	DESCRIPTION	PART NO.	ITEM NO.
GT40		PARTS LIST		

UNLESS OTHERWISE SPECIFIED DIMENSION IN INCHES. TOLERANCES

DECIMALS	ANGLES
.XXX = .005 .XX = .02 .X = .1	±0° 30'

REMOVE BURRS AND BREAK SHARP CORNERS SURFACE QUALITY ✓

MATERIAL —//—

FINISH —//—

		DATE
DRN	CBMcG	9-26-72
CHK'D.		DATE
ENG.		DATE
PROJ. ENG.		DATE
PROD.	Ron Courtney	10/24/72

NEXT HIGHER ASSY. B-DD-GT40-0

SCALE —//—

SHEET 4 OF 4

digital EQUIPMENT CORPORATION MAYNARD MASSACHUSETTS

TITLE: BASE DIAGRAMS

SIZE	CODE	NUMBER	REV.
D	SP	GT40-0-2	

DIST.

This drawing and specifications, herein, are the property of Digital Equipment Corporation and shall not be reproduced or copied or used in whole or in part as the basis for the manufacture or sale of items without written permission.

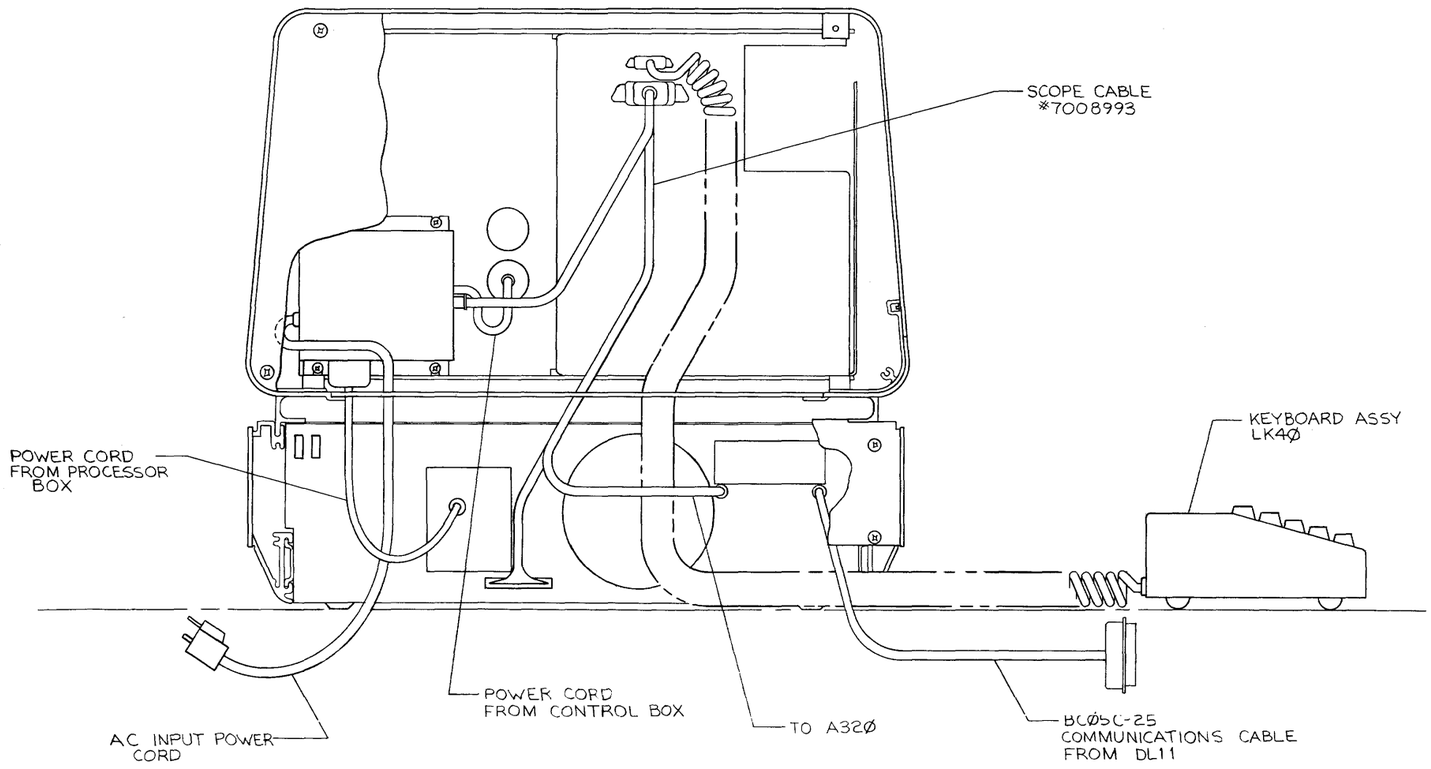

REAR VIEW

FIRST USED ON OPTION/MODEL	QTY.	DESCRIPTION	PART NO.	ITEM NO.
GT40		PARTS LIST		

UNLESS OTHERWISE SPECIFIED DIMENSION IN INCHES. TOLERANCES

DECIMALS	ANGLES
XXX = .005 XX = .02	±0° 30'

REMOVE BURRS AND BREAK SHARP CORNERS SURFACE QUALITY ✓

MATERIAL —"—

FINISH —"—

DRN. CBMcG	9-21-72	
CHK'D.	DATE	
ENG.	DATE	
PROJ ENG	DATE	
PROD	DATE	

NEXT HIGHER ASSY. B-DD-GT40-0

SCALE NONE

SHEET 1 OF 1

digital EQUIPMENT CORPORATION MAYNARD MASSACHUSETTS

TITLE

INTERCONNECT DIAGRAM

SIZE	CODE	NUMBER	REV.
D	IC	GT40-0-3	

DIST

BRUNING 40-107 1586

REV.	DNS	CHANGE NO.	CHK.
REVISIONS			

DEC FORM NO. DRD 100-A

This drawing and specifications, herein, are the property of Digital Equipment Corporation and shall not be reproduced or copied or used in whole or in part as the basis for the manufacture or sale of items without written permission.

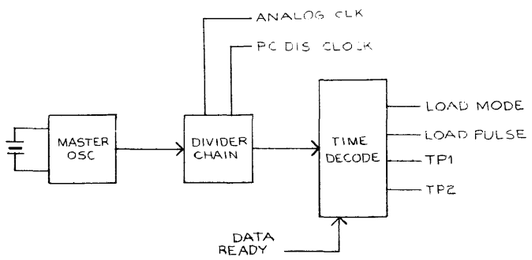

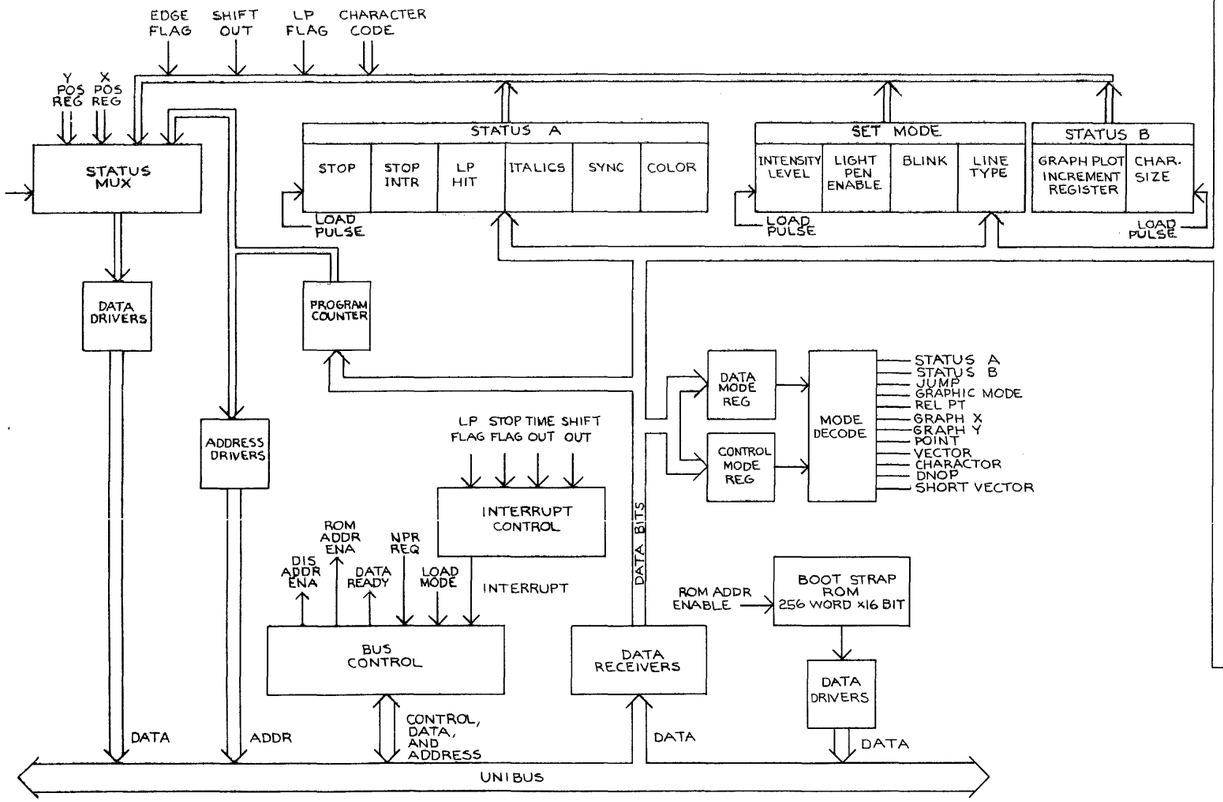

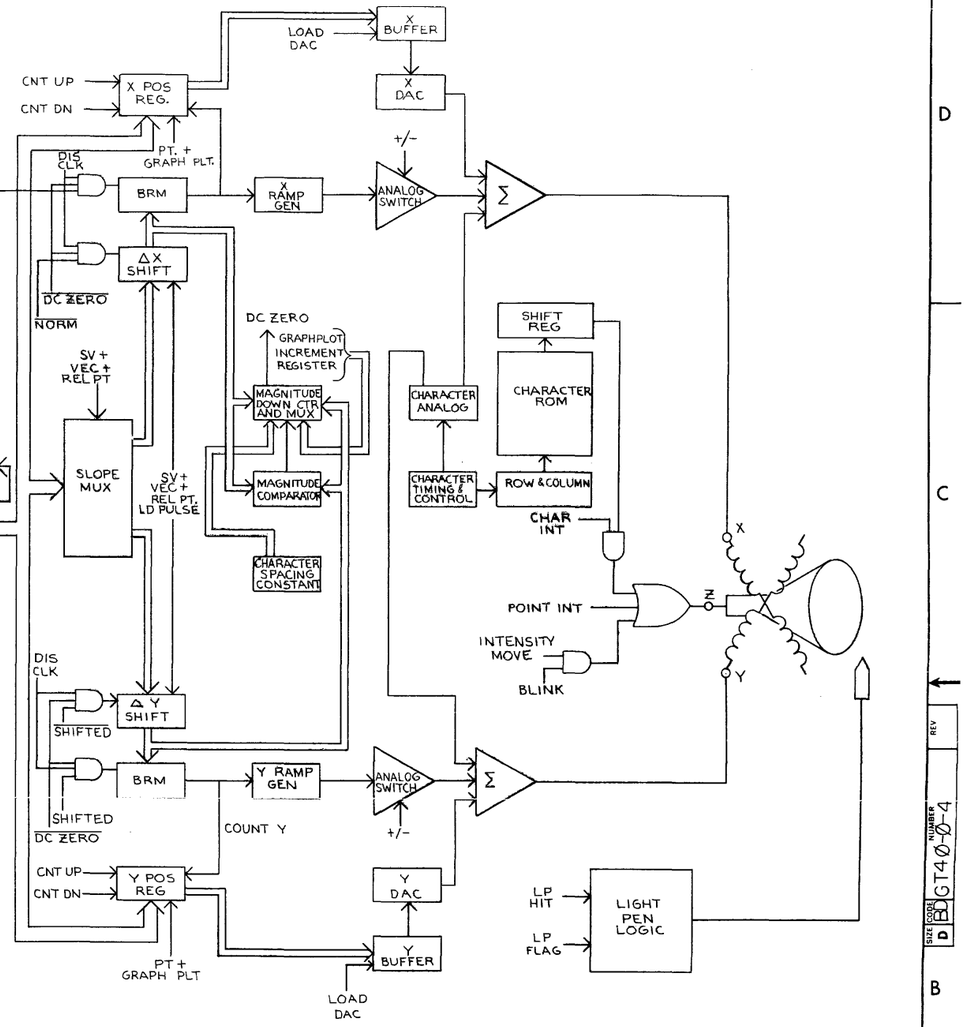

FIRST USED ON OPTION/MODEL: GT40	QTY.	DESCRIPTION: PARTS LIST	PART NO. / ITEM NO.
UNLESS OTHERWISE SPECIFIED DIMENSION IN INCHES. TOLERANCES: DECIMALS .XXX ± .005, .XX ± .02, .X ± .1; ANGLES ±0° 30'. REMOVE BURRS AND BREAK SHARP CORNERS SURFACE QUALITY ✓	DRN. COMCG DATE 9-29-72	digital EQUIPMENT CORPORATION MAYNARD MASSACHUSETTS	
	CH'D. DATE 10-2-72	TITLE: DISPLAY PROCESSOR	
	ENG. DATE		
	PROJ. ENG. DATE 10/13/72		
MATERIAL: —	PROD. DATE 10/24/72		
FINISH: —	NEXT HIGHER ASSY.: B-DD-GT40-0	SIZE D / CODE BD / NUMBER GT40-0-4 / REV.	
	SCALE: —	DIST.	
	SHEET 1 OF 1		

REVISIONS: REV | CHANGE NO | CHK

BRUNING 40-522 15840

DEC FORM NO ORD 102-B

This drawing and specifications, herein, are the property of Digital Equipment Corporation and shall not be reproduced or copied or used in whole or in part as the basis for the manufacture or sale of items without written permission.

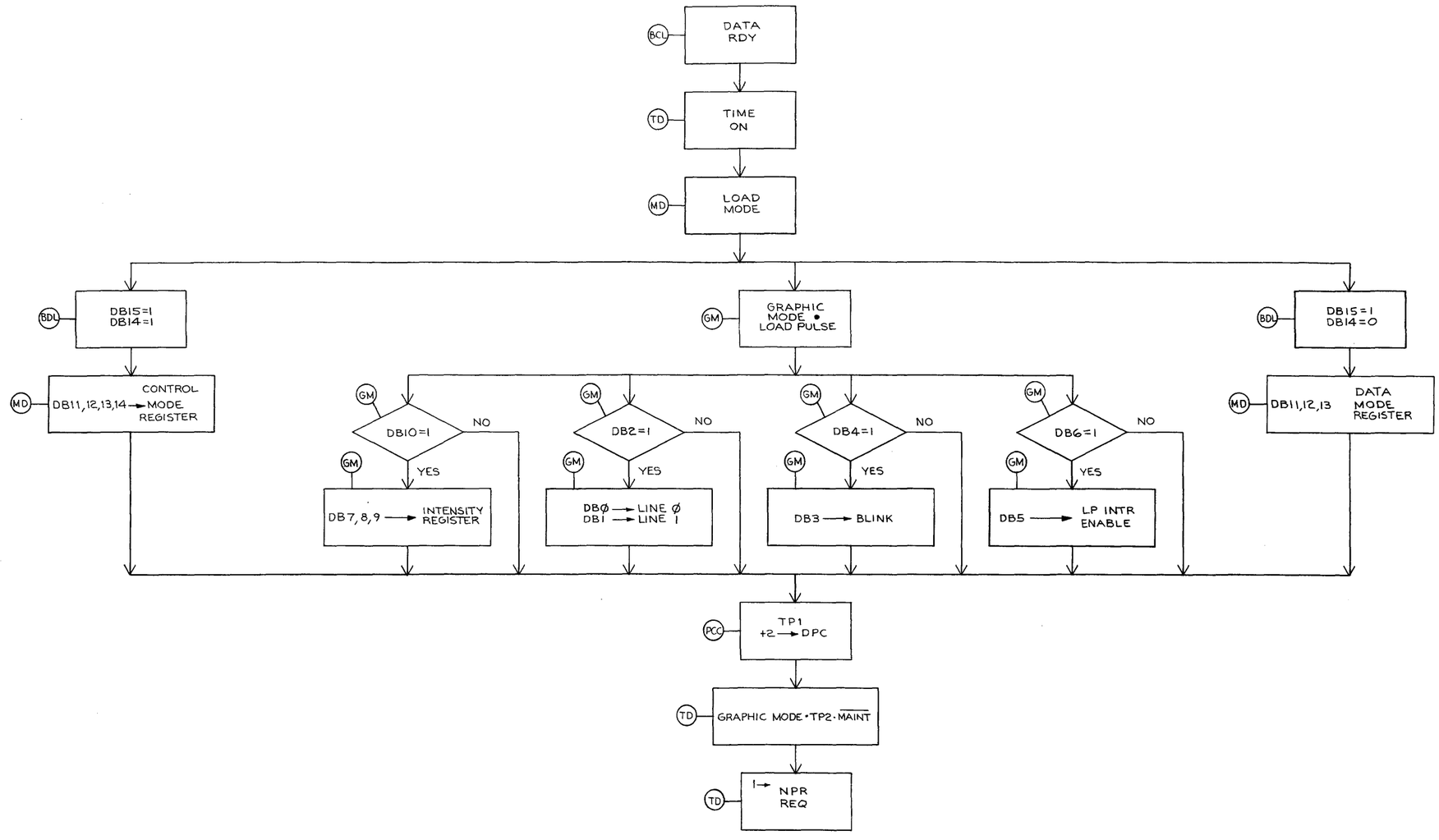

FIRST USED ON OPTION/MODEL	QTY.	DESCRIPTION	PART NO.	ITEM NO.
GT4Ø		PARTS LIST		

UNLESS OTHERWISE SPECIFIED DIMENSION IN INCHES. TOLERANCES

DECIMALS	ANGLES
.XXX = .005	±0° 30'
.XX = .02	

REMOVE BURRS AND BREAK SHARP CORNERS SURFACE QUALITY ✓

MATERIAL —//—

FINISH —//—

DRN. CBMcCy DATE 10-2-72

CHK'D. DATE

ENG. DATE

PROJ ENG DATE

PROD. DATE

NEXT HIGHER ASSY. B-DD-GT4Ø-Ø

SCALE —//—

SHEET 1 OF 1

digital EQUIPMENT CORPORATION MAYNARD MASSACHUSETTS

TITLE SET GRAPHIC MODE

SIZE	CODE	NUMBER	REV.
D	FD	GT4Ø-Ø-5	

DIST.

REV | CHANGE NO | CHK

BRUNING 40-522 1584

DEC FORM NO DRD 102-B

This drawing and specifications, herein, are the property of Digital Equipment Corporation and shall not be reproduced or copied or used in whole or in part as the basis for the manufacture or sale of items without written permission.

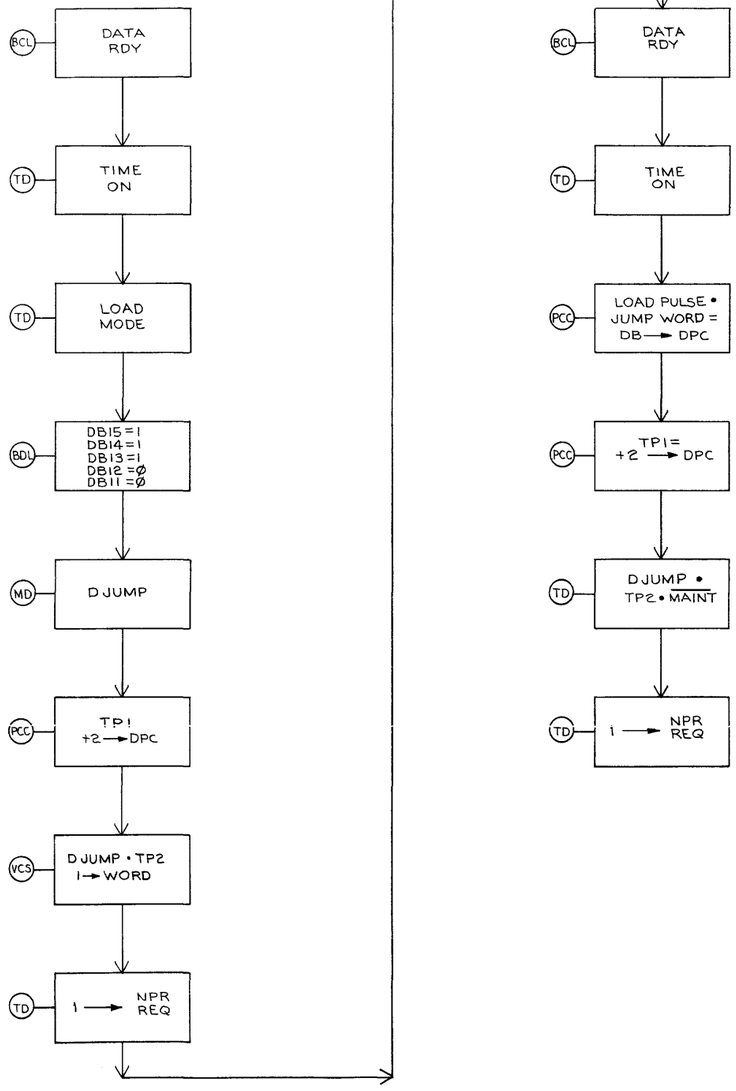

FIRST USED ON OPTION/MODEL	QTY.	DESCRIPTION	PART NO.	ITEM NO.
GT4Ø		PARTS LIST		

UNLESS OTHERWISE SPECIFIED DIMENSION IN INCHES. TOLERANCES

DECIMALS	ANGLES
.XXX = .005 .XX = .02 .X = .1	±0° 30'

REMOVE BURRS AND BREAK SHARP CORNERS SURFACE QUALITY ✓

MATERIAL —//—

FINISH —//—

DRN. CBMcCoy	DATE 10-2-72	digital EQUIPMENT CORPORATION MAYNARD MASSACHUSETTS
CHK'D.	DATE	
ENG.	DATE	TITLE
PROJ. ENG.	DATE	DISPLAY JUMP
PROD.	DATE	

NEXT HIGHER ASSY. B-DD-GT4Ø-Ø

SCALE —//—

SHEET 1 OF 1

SIZE	CODE	NUMBER	REV.
D	FD	GT4Ø-Ø-6	

DIST.

REV	REVISIONS	CHANGE NO	CHK

BRUNING 40-522 15M40

DEC FORM NO DRD 102-B

SIZE D CODE FD NUMBER GT40-0-6 REV

This drawing and specifications, herein, are the property of Digital Equipment Corporation and shall not be reproduced or copied or used in whole or in part as the basis for the manufacture or sale of items without written permission.

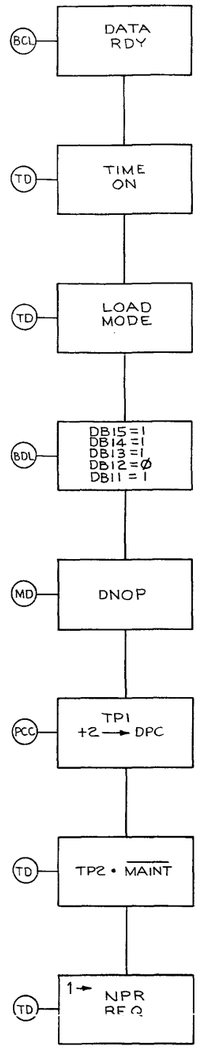

FIRST USED ON OPTION/MODEL	QTY.	DESCRIPTION	PART NO.	ITEM NO.
GT4Ø		PARTS LIST		

UNLESS OTHERWISE SPECIFIED DIMENSION IN INCHES. TOLERANCES

DECIMALS	ANGLES
.XXX = .005 .XX = .02 X = 1	±0° 30'

REMOVE BURRS AND BREAK SHARP CORNERS SURFACE QUALITY ✓

MATERIAL —//—

FINISH —//—

DRN. CBMcCoy DATE 10-2-72

CHK'D. [illegible] DATE 10-5-72

ENG. [illegible] DATE [illegible]

PROJ. ENG. [illegible] DATE [illegible]

PROD. [illegible] DATE [illegible]

NEXT HIGHER ASSY. B-DD-GT4Ø-Ø

SCALE —//—

SHEET 1 OF 1

digital EQUIPMENT CORPORATION MAYNARD MASSACHUSETTS

TITLE NO OPERATION

SIZE	CODE	NUMBER	REV.
D	FD	GT4Ø-Ø-7	

DIST.

REVISIONS: CHK | CHANGE NO | REV

BRUNING 40-522 15840

DEC FORM NO DRD 102-B

This drawing and specifications, herein, are the property of Digital Equipment Corporation and shall not be reproduced or copied or used in whole or in part as the basis for the manufacture or sale of items without written permission.

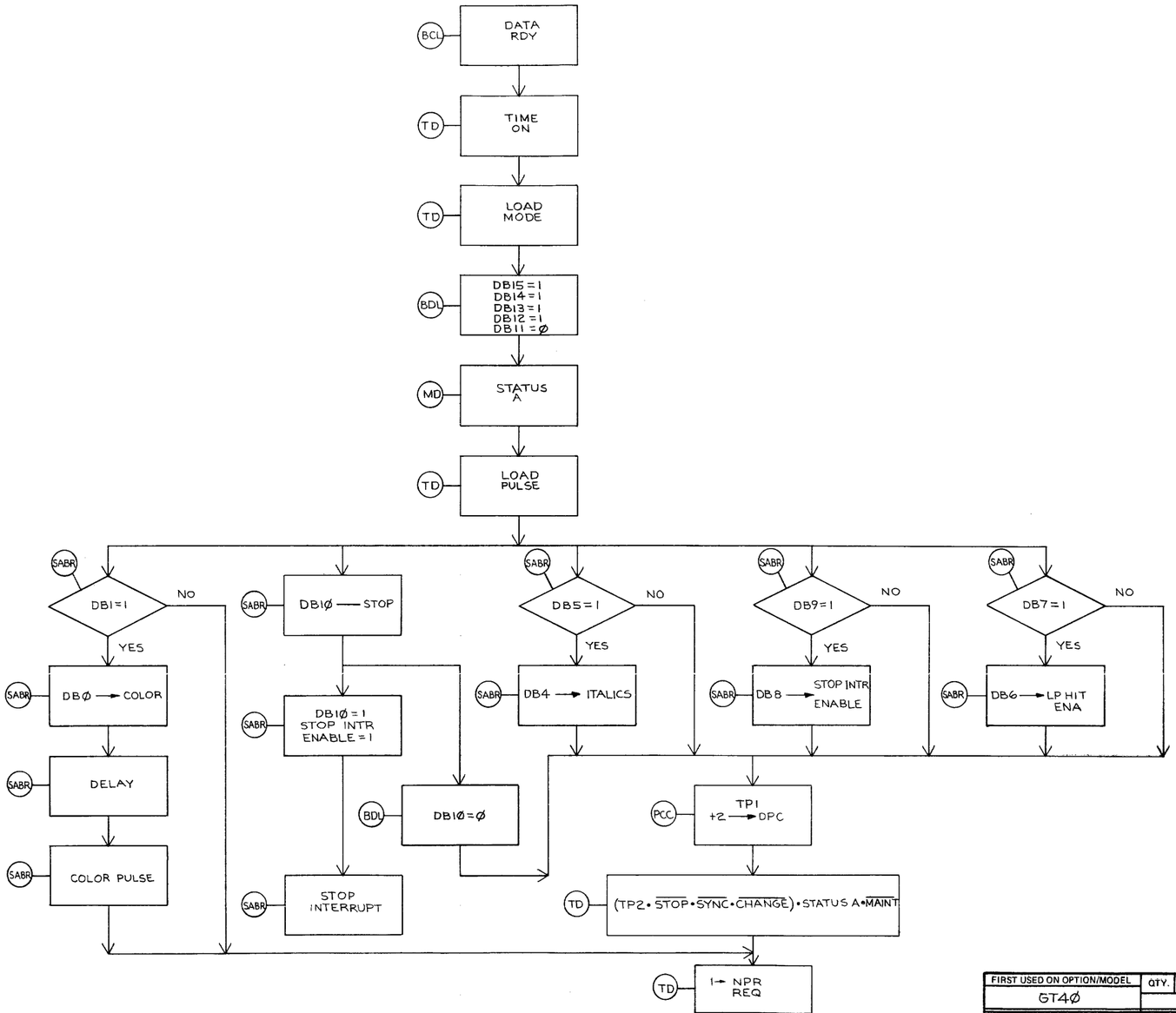

FIRST USED ON OPTION/MODEL	QTY.	DESCRIPTION	PART NO.	ITEM NO.
GT4Ø		PARTS LIST		

UNLESS OTHERWISE SPECIFIED DIMENSION IN INCHES. TOLERANCES

DECIMALS	ANGLES
.XXX = .005 .XX = .02 .X = .1	±0° 30'

REMOVE BURRS AND BREAK SHARP CORNERS SURFACE QUALITY ✓

MATERIAL —//—

FINISH —//—

DRN. CBMcCoy	DATE 10-2-72	digital EQUIPMENT CORPORATION MAYNARD MASSACHUSETTS
CHK'D.	DATE	
ENG.	DATE 10/13/72	TITLE LOAD STATUS REGISTER A
PROJ. ENG.	DATE 10/13/72	
PROD.	DATE 11/19/72	
NEXT HIGHER ASSY. B-DD-GT4Ø-Ø		SIZE D CODE FD NUMBER GT4Ø-Ø-8 REV.
SCALE —//—		
SHEET 1 OF 1		DIST.

REVISIONS: CHK | CHANGE NO. | REV

BRUNING 40-522 15840

DEC FORM NO DRD 102-B

This drawing and specifications, herein, are the property of Digital Equipment Corporation and shall not be reproduced or copied or used in whole or in part as the basis for the manufacture or sale of items without written permission.

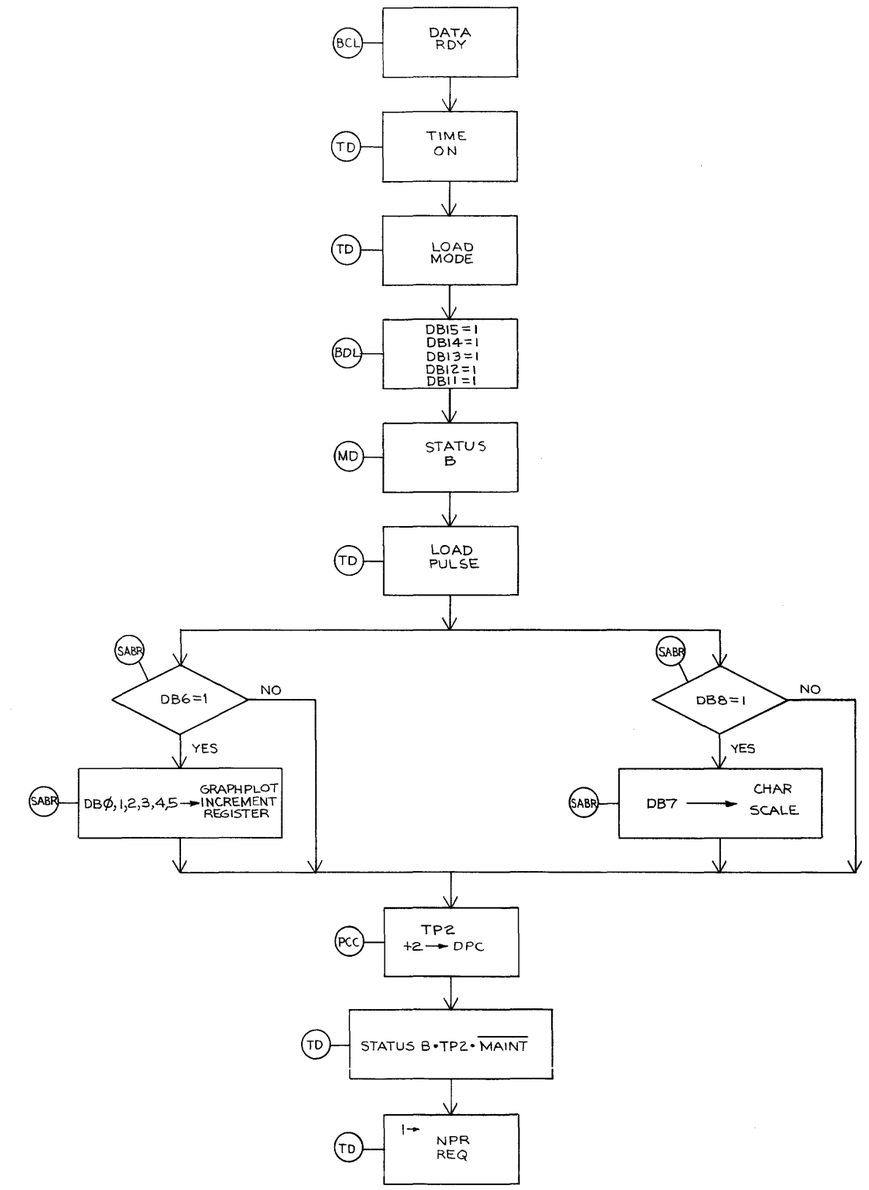

FIRST USED ON OPTION/MODEL	QTY.	DESCRIPTION	PART NO.	ITEM NO.
GT4Ø		PARTS LIST		

UNLESS OTHERWISE SPECIFIED DIMENSION IN INCHES. TOLERANCES

DECIMALS	ANGLES
.XXX = .005 .XX = .02 .X = 1	±0° 30'

REMOVE BURRS AND BREAK SHARP CORNERS SURFACE QUALITY ✓

MATERIAL —//—

FINISH —//—

DRN. CB McCoy DATE 10-3-72
CHK'D. DATE
ENG. DATE
PROJ. ENG. DATE
PROD. DATE 10/19/72

NEXT HIGHER ASSY. B-DD-GT4Ø-Ø

SCALE —//—

SHEET 1 OF 1

digital EQUIPMENT CORPORATION MAYNARD MASSACHUSETTS

TITLE LOAD STATUS REGISTER B

SIZE	CODE	NUMBER	REV.
D	FD	GT4Ø-Ø-9	

DIST.

REVISIONS: CHK | CHANGE NO. | REV

BRUNING 40-522 15840

DEC FORM NO DRD 102-B

This drawing and specifications, herein, are the property of Digital Equipment Corporation and shall not be reproduced or copied or used in whole or in part as the basis for the manufacture or sale of items without written permission.

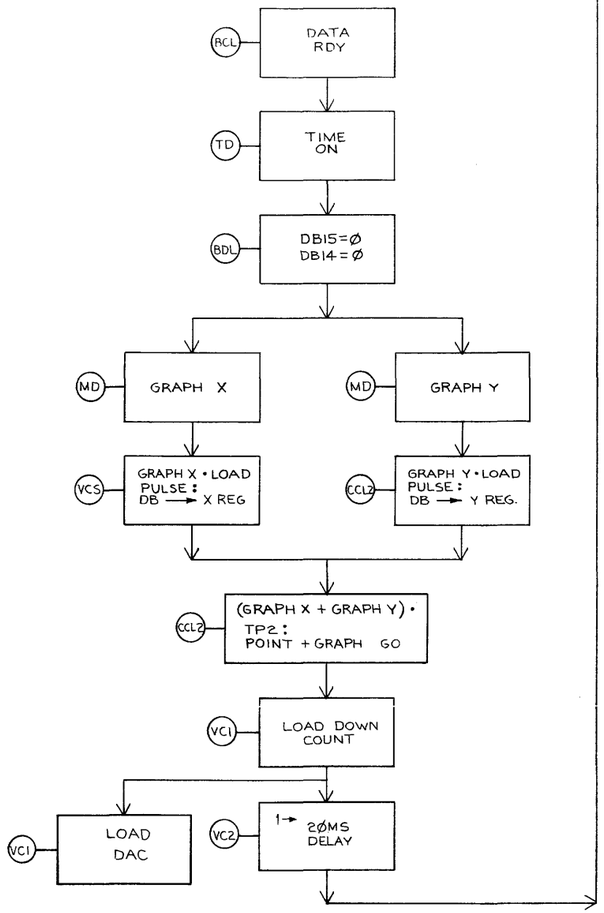

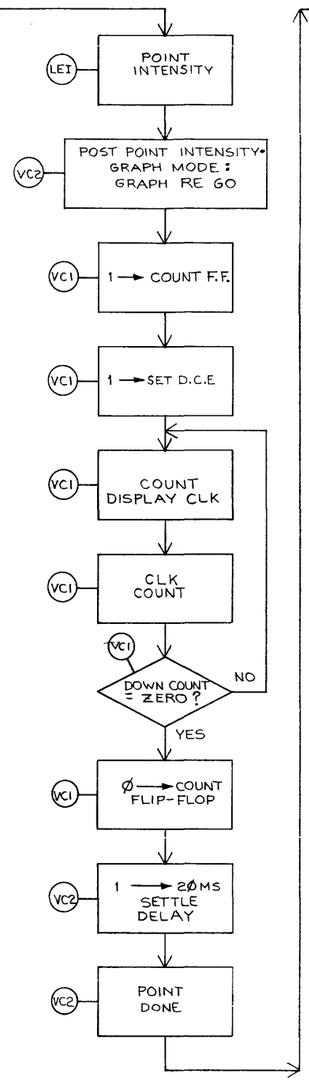

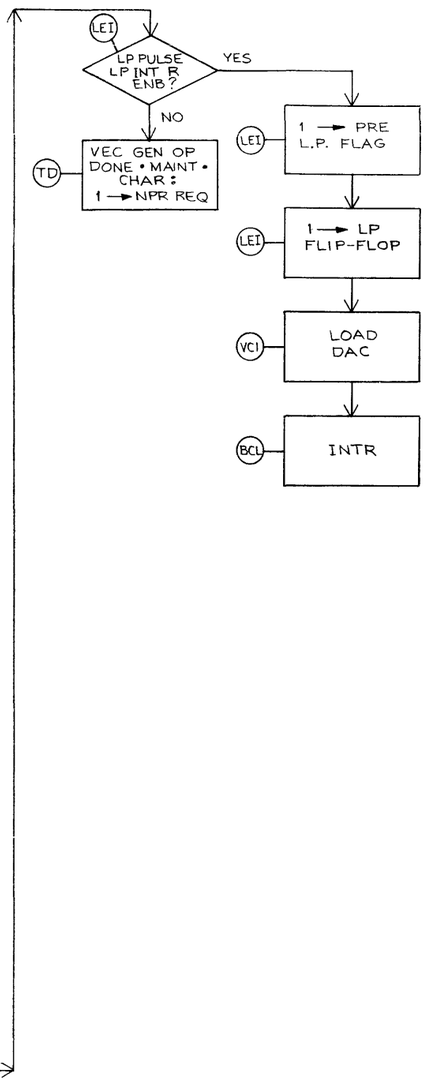

FIRST USED ON OPTION/MODEL	QTY.	DESCRIPTION	PART NO.	ITEM NO.
GT4Ø		PARTS LIST		

UNLESS OTHERWISE SPECIFIED DIMENSION IN INCHES. TOLERANCES

DECIMALS	ANGLES
.XXX = 005 .XX = .02 .X = .1	±0° 30'

REMOVE BURRS AND BREAK SHARP CORNERS SURFACE QUALITY ✓

MATERIAL —//—

FINISH —//—

DRN. CBMcCoy	DATE 10-3-72	digital EQUIPMENT CORPORATION MAYNARD MASSACHUSETTS
CHK'D.	DATE 10-5-72	
ENG.	DATE 10/12	
PROJ. ENG.	DATE 10/12/72	
PROD.	DATE 10/24/72	

NEXT HIGHER ASSY. B-DD-GT4Ø-Ø

SCALE —//—

SHEET OF

TITLE: GRAPH X OR GRAPH Y

SIZE	CODE	NUMBER	REV.
D	FD	GT4Ø-Ø-1Ø	

DIST.

REVISIONS			
REV	CHANGE NO	CHK	

BRUNING 40-522 15840

DEC FORM NO DRD 102-B

This drawing and specifications, herein, are the property of Digital Equipment Corporation and shall not be reproduced or copied or used in whole or in part as the basis for the manufacture or sale of items without written permission.

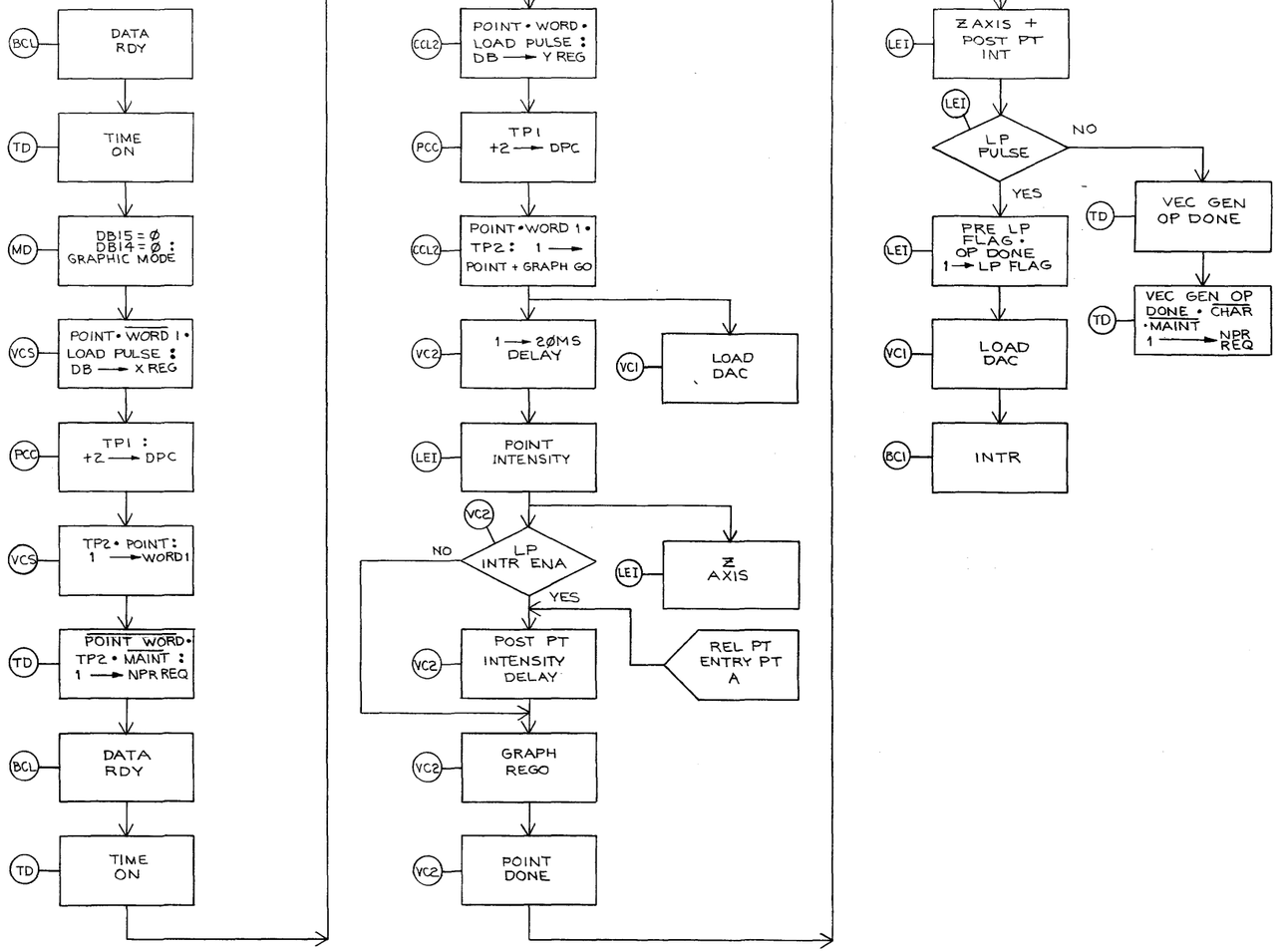

FIRST USED ON OPTION/MODEL	QTY.	DESCRIPTION	PART NO.	ITEM NO.
GT4Ø		PARTS LIST		

UNLESS OTHERWISE SPECIFIED DIMENSION IN INCHES. TOLERANCES

DECIMALS	ANGLES
.XXX = .005 .XX = .02 X = 1	±0° 30'

REMOVE BURRS AND BREAK SHARP CORNERS SURFACE QUALITY ✓

MATERIAL —//—

FINISH —//—

DRN. C B McCoy DATE 10-4-72
CHK'D. [signature] DATE 10-11-72
ENG. [signature] DATE 10/13/72
PROJ. ENG. DATE
PROD. [signature] DATE 10/24/72

NEXT HIGHER ASSY. B-DD-GT4Ø-Ø

SCALE —//—

SHEET 1 OF 1

digital EQUIPMENT CORPORATION MAYNARD MASSACHUSETTS

TITLE POINT MODE

SIZE	CODE	NUMBER	REV.
D	FD	GT4Ø-Ø-11	

DIST.

REVISIONS: REV | CHANGE NO | CHK

BRUNING 40-522 1584

DEC FORM NO ORD 102-B

This drawing and specifications, herein, are the property of Digital Equipment Corporation and shall not be reproduced or copied or used in whole or in part as the basis for the manufacture or sale of items without written permission.

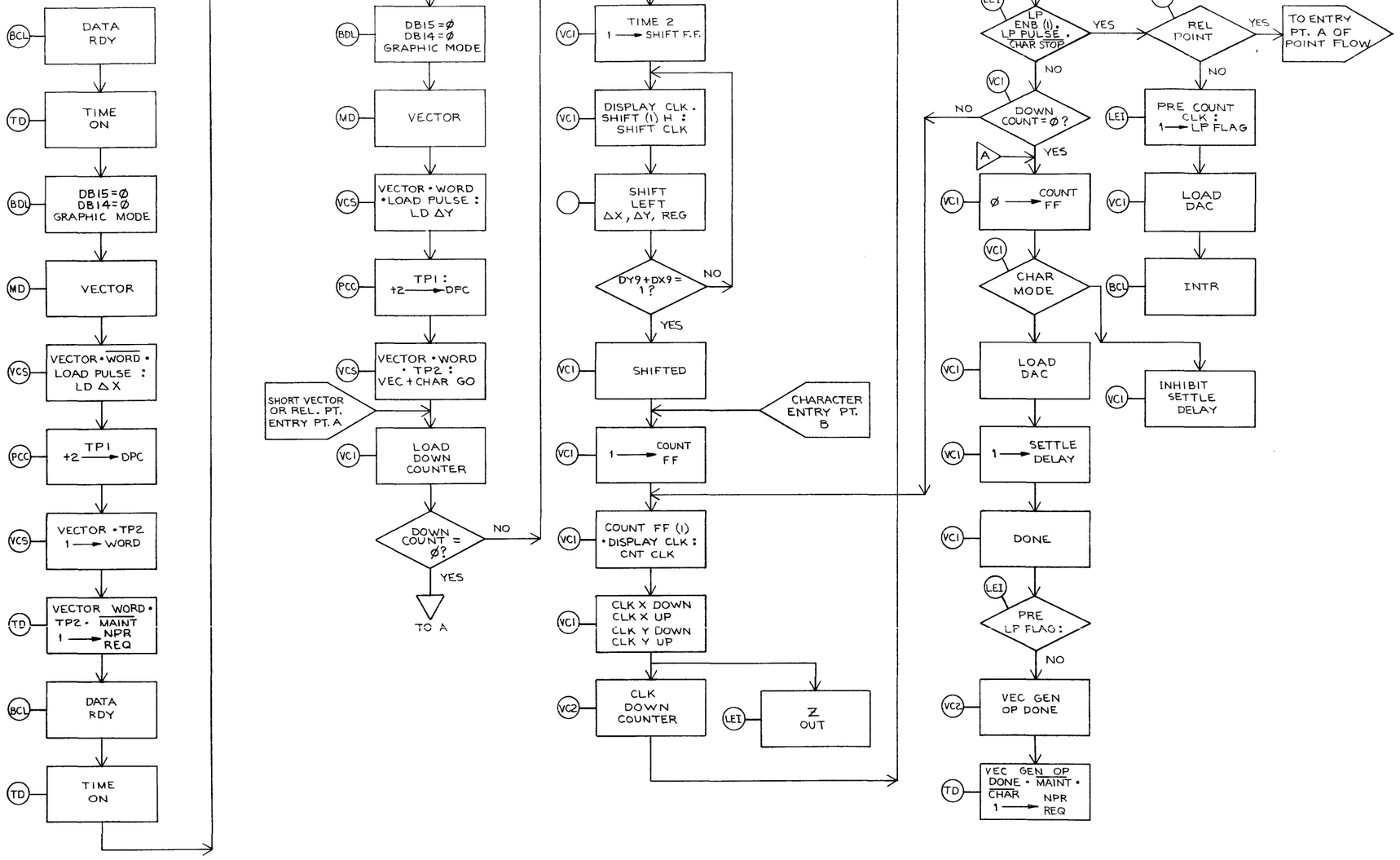

FIRST USED ON OPTION/MODEL: GT4Ø	QTY.	DESCRIPTION	PART NO. / ITEM NO.
		PARTS LIST	
UNLESS OTHERWISE SPECIFIED DIMENSION IN INCHES. TOLERANCES: DECIMALS .XXX = .005 .XX = .02 .X = .1; ANGLES ±0° 30'. REMOVE BURRS AND BREAK SHARP CORNERS. SURFACE QUALITY ✓	DRN. C.B.McCoy DATE 10-20-72	digital EQUIPMENT CORPORATION MAYNARD MASSACHUSETTS	
	CHK'D. DATE 10-23-72		
	ENG. DATE 10/24/72		
	PROJ. ENG. DATE 10/24/72	TITLE: VECTOR MODE	
MATERIAL: //	PROD. DATE 10/24/72		
FINISH: //	NEXT HIGHER ASSY.: B-DD-GT4Ø-Ø	SIZE D / CODE FD / NUMBER GT4Ø-Ø-12 / REV.	
	SCALE: //		
	SHEET 1 OF 1	DIST.	

REVISIONS: REV | CHANGE NO | CHK

BRUNING 40-522 15840

DEC FORM NO DRD 102-B

SIZE D / CODE FD / NUMBER GT4Ø-Ø-12 / REV

This drawing and specifications, herein, are the property of Digital Equipment Corporation and shall not be reproduced or copied or used in whole or in part as the basis for the manufacture or sale of items without written permission.

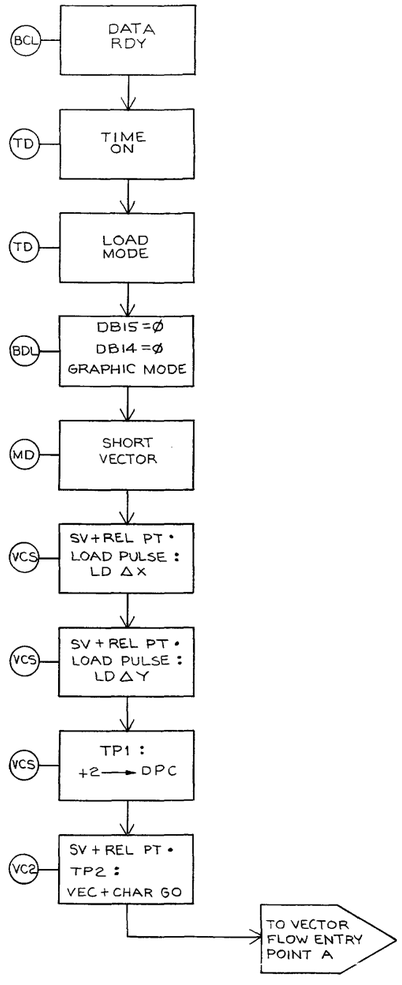

FIRST USED ON OPTION/MODEL	QTY.	DESCRIPTION	PART NO.	ITEM NO.
GT4Ø		PARTS LIST		

UNLESS OTHERWISE SPECIFIED DIMENSION IN INCHES. TOLERANCES

DECIMALS	ANGLES
.XXX = .005	±0° 30'
XX = .02	
X = .1	

REMOVE BURRS AND BREAK SHARP CORNERS SURFACE QUALITY ✓

MATERIAL —"—

FINISH —"—

DRN. CBM Coy DATE 10-5-72

CHK'D. DATE 10-11-72

ENG. DATE

PROJ. ENG. DATE

PROD. DATE

NEXT HIGHER ASSY. B-DD-GT4Ø-Ø

SCALE —"—

SHEET 1 OF 1

digital EQUIPMENT CORPORATION MAYNARD MASSACHUSETTS

TITLE: SHORT VECTOR OR RELATIVE POINT

SIZE D | CODE FD | NUMBER GT4Ø-Ø-13 | REV

DIST.

REVISIONS			
REV	CHANGE NO	CHK	

BRUNING 40.522 15M

DEC FORM NO DRD 102-B

This drawing and specifications, herein, are the property of Digital Equipment Corporation and shall not be reproduced or copied or used in whole or in part as the basis for the manufacture or sale of items without written permission.

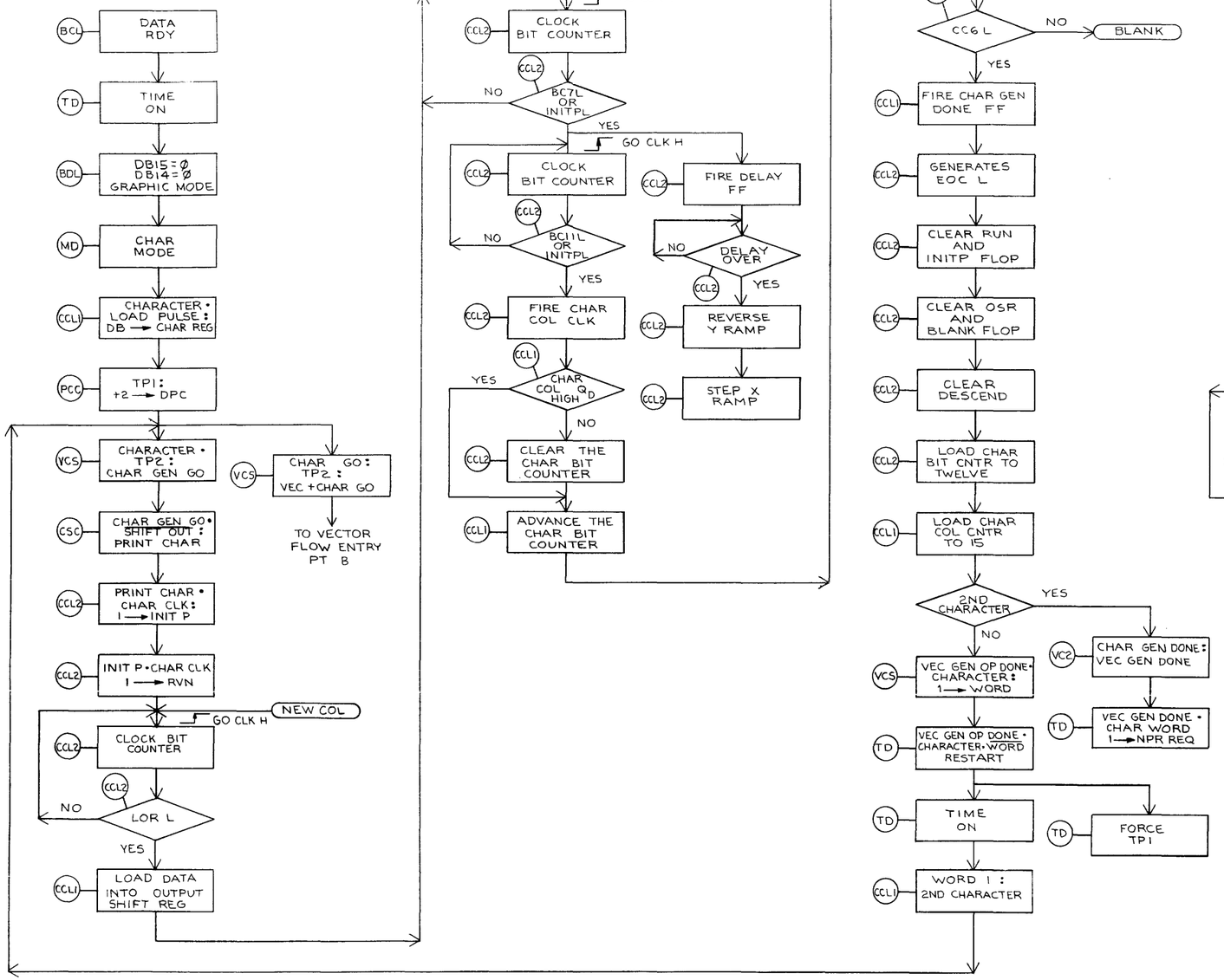

FIRST USED ON OPTION/MODEL	QTY.	DESCRIPTION	PART NO.	ITEM NO.
GT4Ø		PARTS LIST		

UNLESS OTHERWISE SPECIFIED DIMENSION IN INCHES. TOLERANCES

DECIMALS	ANGLES
.XXX = .005	±0° 30'
.XX = .02	
X = .1	

REMOVE BURRS AND BREAK SHARP CORNERS SURFACE QUALITY ✓

MATERIAL —"—

FINISH —"—

DRN. CBMcG	DATE 10-5-72	digital EQUIPMENT CORPORATION MAYNARD MASSACHUSETTS
CHK'D. DK	DATE 10-11-72	
ENG. H. Hanover	DATE 10/12/72	
PROJ. ENG. HE Fleck	DATE 10/12/72	
PROD. RCC Lowell	DATE 10/19/72	

TITLE: CHARACTER GENERATOR

NEXT HIGHER ASSY. B-DD-GT4Ø-Ø

SCALE —"—

SHEET 1 OF 1

SIZE	CODE	NUMBER	REV.
D	FD	GT4Ø-Ø-14	

DIST.

REVISIONS			
CHANGE NO			
CHK			
REV			

BRUNING 40-522 15840

DEC FORM NO ORD 102-B

SIZE	CODE	NUMBER	REV
D	FD	GT4Ø-Ø-14	

This drawing and specifications, herein, are the property of Digital Equipment Corporation and shall not be reproduced or copied or used in whole or in part as the basis for the manufacture or sale of items without written permission.

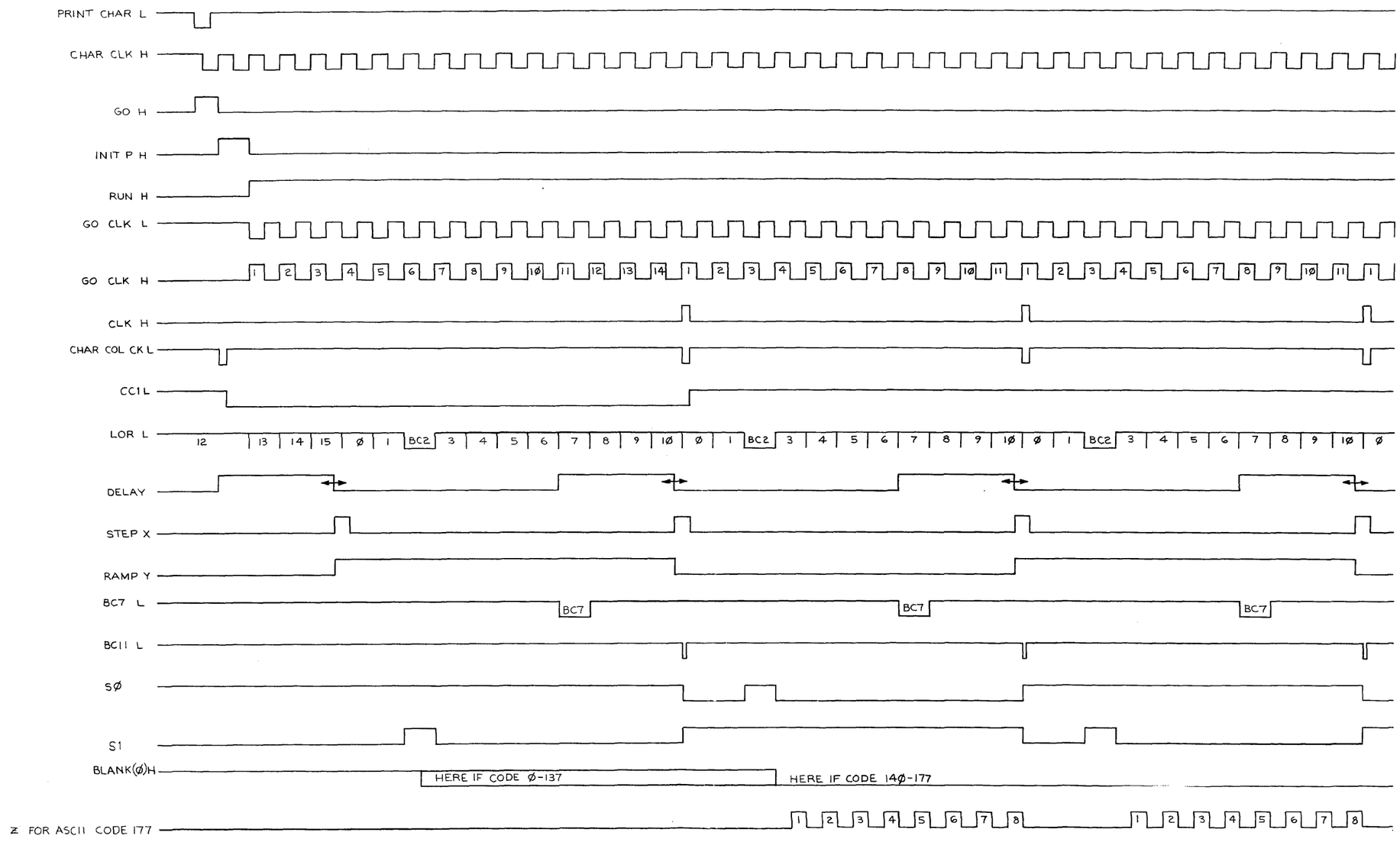

FIRST USED ON OPTION/MODEL: GT40	QTY.	DESCRIPTION: PARTS LIST	PART NO. / ITEM NO.
UNLESS OTHERWISE SPECIFIED DIMENSION IN INCHES. TOLERANCES. DECIMALS: .XXX ± .005, .XX ± .02; ANGLES: ±0° 30'	DRN. CBM Cy DATE 10-9-72	digital EQUIPMENT CORPORATION MAYNARD MASSACHUSETTS	
	CHK'D. DATE 10-13-72	TITLE: CHARACTER GENERATOR LOGIC TIMING	
	ENG. DATE		
	PROJ. ENG. DATE		
REMOVE BURRS AND BREAK SHARP CORNERS. SURFACE QUALITY ✓	PROD. DATE		
MATERIAL: //	NEXT HIGHER ASSY.: B-DD-GT40-Ø	SIZE D / CODE TD / NUMBER GT40-0-16 / REV.	
FINISH: //	SCALE: —		
	SHEET 1 OF 5	DIST.	

REVISIONS: REV | CHANGE NO | CHK

BRUNING 40.522 1584 DEC FORM NO DRD 102-B

SIZE D / CODE TD / NUMBER GT40-Ø-16 / REV

This drawing and specifications, herein, are the property of Digital Equipment Corporation and shall not be reproduced or copied or used in whole or in part as the basis for the manufacture or sale of items without written permission.

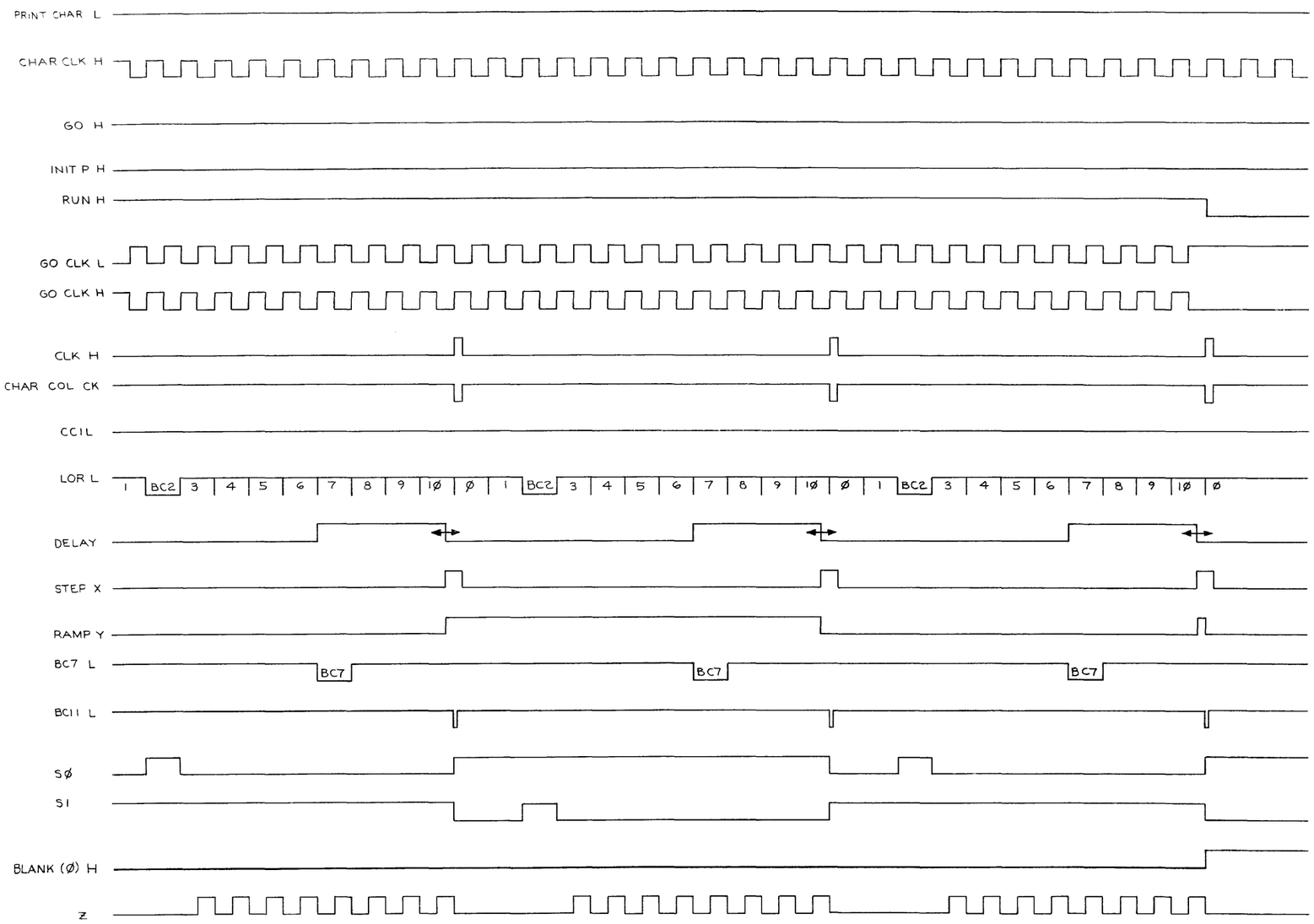

FIRST USED ON OPTION/MODEL	QTY.	DESCRIPTION	PART NO.	ITEM NO.
GT4Ø		PARTS LIST		

UNLESS OTHERWISE SPECIFIED DIMENSION IN INCHES. TOLERANCES

DECIMALS	ANGLES
.XXX = .005 .XX = .02 .X = .1	±0° 30'

REMOVE BURRS AND BREAK SHARP CORNERS SURFACE QUALITY ✓

MATERIAL —"—

FINISH —"—

DRN. CBM[illegible]	DATE	10-10-72
CHK'D. [illegible]	DATE	11-13-72
ENG. [illegible]	DATE	11-15-72
PROJ. ENG. [illegible]	DATE	11/17/72
PROD. [illegible]	DATE	11/19/72

NEXT HIGHER ASSY. B-DD-GT4Ø-Ø

SCALE —"—

SHEET 2 OF 5

digital EQUIPMENT CORPORATION MAYNARD MASSACHUSETTS

TITLE
CHARACTER GENERATOR LOGIC TIMING

SIZE	CODE	NUMBER	REV.
D	TD	GT4Ø-Ø-16	

DIST.

REVISIONS

REV	CHANGE NO	CHK

BRUNING 40-522 15840

DEC FORM NO DRD 102-B

SIZE D | CODE TD | NUMBER GT4Ø-Ø-16 | REV

GT4Ø-Ø-16

This drawing and specifications, herein, are the property of Digital Equipment Corporation and shall not be reproduced or copied or used in whole or in part as the basis for the manufacture or sale of items without written permission.

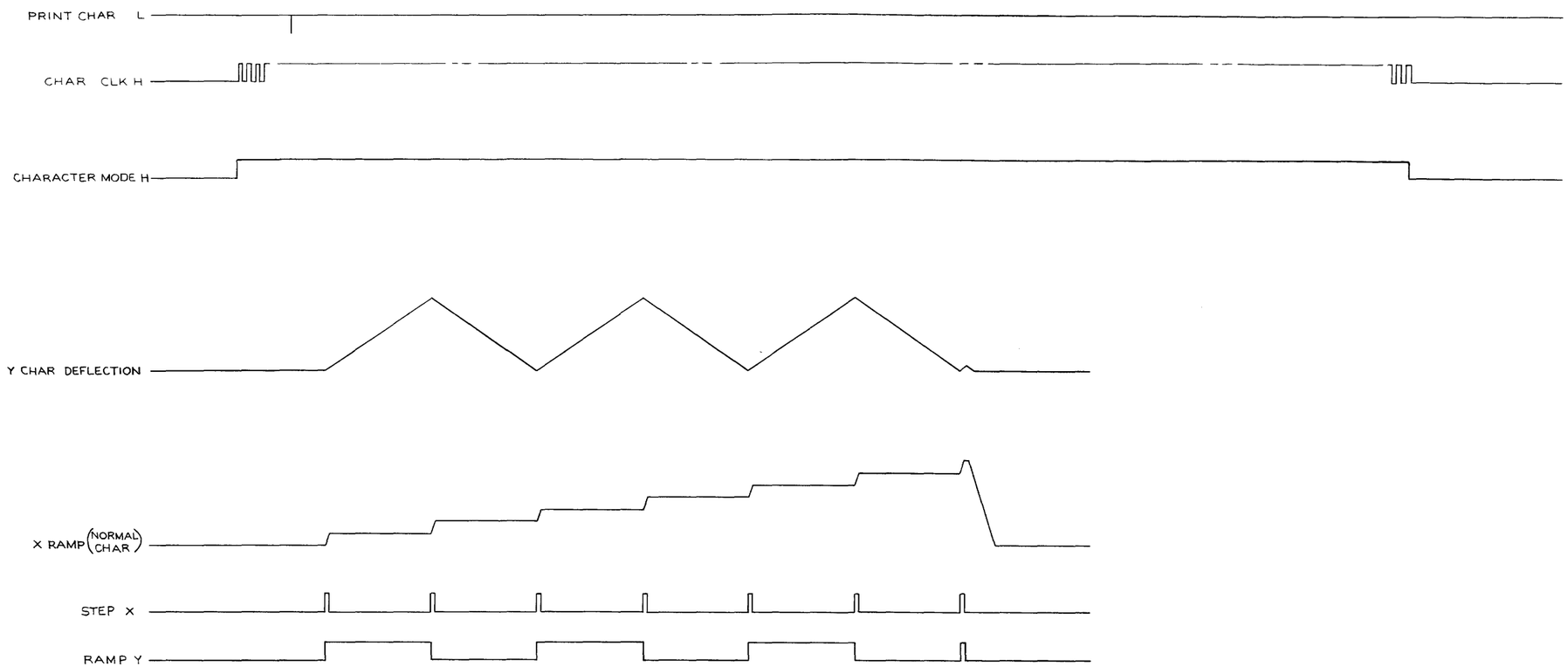

FIRST USED ON OPTION/MODEL	QTY.	DESCRIPTION	PART NO	ITEM NO.
GT4Ø	PARTS LIST			

UNLESS OTHERWISE SPECIFIED DIMENSION IN INCHES. TOLERANCES

DECIMALS	ANGLES
.XXX = .005 .XX = .02 X = 1	±0° 30'

REMOVE BURRS AND BREAK SHARP CORNERS SURFACE QUALITY ✓

MATERIAL —//—

FINISH —//—

DRN. CBMcCy	DATE 10-10-72	digital EQUIPMENT CORPORATION MAYNARD MASSACHUSETTS
CHK'D. [illegible]	DATE 10-13-72	TITLE CHARACTER GENERATOR LOGIC TIMING
ENG. [illegible]	DATE 10-13-72	
PROJ. ENG.	DATE	
PROD. [illegible]	DATE [illegible]	
NEXT HIGHER ASSY. B-DD-GT4Ø-Ø		SIZE D CODE TD NUMBER GT4Ø-Ø-16 REV.
SCALE —//—		
SHEET 3 OF 5		DIST.

REVISIONS: CHK | CHANGE NO | REV

BRUNING 40-522 1584

DEC FORM NO ORD 102-B

This drawing and specifications, herein, are the property of Digital Equipment Corporation and shall not be reproduced or copied or used in whole or in part as the basis for the manufacture or sale of items without written permission.

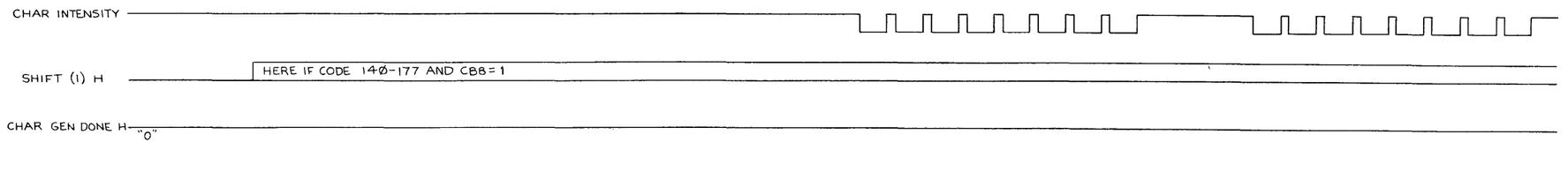

FIRST USED ON OPTION/MODEL: GT40	QTY.	DESCRIPTION	PART NO.	ITEM NO.
		PARTS LIST		

UNLESS OTHERWISE SPECIFIED DIMENSION IN INCHES. TOLERANCES
DECIMALS: XXX = .005, XX = .02, X = .1 — ANGLES: ±0° 30'
REMOVE BURRS AND BREAK SHARP CORNERS SURFACE QUALITY ✓
MATERIAL —"—
FINISH —"—

DRN. CBMcG	DATE 10-19-72	digital EQUIPMENT CORPORATION MAYNARD MASSACHUSETTS
CHK'D.	DATE 11/12/72	
ENG.	DATE 10-3-72	TITLE: CHARACTER GENERATOR LOGIC TIMING
PROJ. ENG.	DATE 11/8/72	
PROD.	DATE 11/17/72	
NEXT HIGHER ASSY. B-DD-GT40-0		SIZE D / CODE TD / NUMBER GT40-0-16 / REV.
SCALE —"—		
SHEET 4 OF 5		DIST.

REVISIONS			
REV	CHANGE NO.		CHK.

BRUNING 40-522 15840
DEC FORM NO. DRD 102-B

CONTINUED ON SHEET #5

This drawing and specifications, herein, are the property of Digital Equipment Corporation and shall not be reproduced or copied or used in whole or in part as the basis for the manufacture or sale of items without written permission.

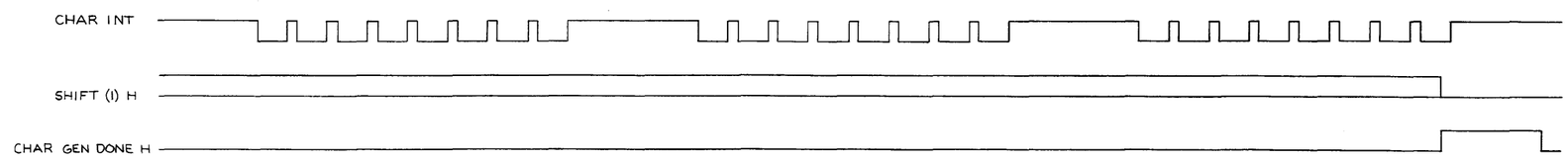

FIRST USED ON OPTION/MODEL	QTY.	DESCRIPTION	PART NO.	ITEM NO.
GT4Ø		PARTS LIST		

UNLESS OTHERWISE SPECIFIED DIMENSION IN INCHES. TOLERANCES

DECIMALS	ANGLES
.XXX = .005 .XX = .02 .X = .1	±0° 30'

REMOVE BURRS AND BREAK SHARP CORNERS SURFACE QUALITY ✓

MATERIAL —//—

FINISH —//—

DRN. CBMcG	DATE 10-11-72	digital EQUIPMENT CORPORATION MAYNARD MASSACHUSETTS
CHK'D.	DATE 10-13-72	
ENG.	DATE 10-13-72	TITLE CHARACTER GENERATOR LOGIC TIMING
PROJ. ENG.	DATE	
PROD.	DATE	

NEXT HIGHER ASSY. B-DD-GT4Ø-Ø

SCALE —

SHEET 5 OF 5

SIZE	CODE	NUMBER	REV
D	TD	GT4Ø-Ø-16	

REVISIONS: CHK | CHANG. NO | REV

BRUNING 40-522 15840

DEC FORM NO DRD 102-B

This drawing and specifications, herein, are the property of Digital Equipment Corporation and shall not be reproduced or copied or used in whole or in part as the basis for the manufacture or sale of items without written permission. 1972

SIZE	CODE	NUMBER	REV.
K	WL	GT4Ø-Ø-WL	B

FIRST USED ON OPTION MODEL	QTY.	DESCRIPTION	PART NO.	ITEM NO.
GT4Ø		PARTS LIST		

REVISIONS		
CHK	CHANGE NO.	REV.
[illegible]	GT4Ø-ØØØØ4 Beasley 11.27.72	A
	B. QUINN Bob Quinn [illegible]	
[illegible]	GT4Ø-00007 B. Blodgett 2-23-73	B
	R. QUINN Henry Lavoie 3-5-73	

DRN. CBMcCoy	DATE 10-2-72	digital EQUIPMENT CORPORATION MAYNARD, MASSACHUSETTS
CHK'D. [illegible]	DATE 10/22/72	TITLE GRAPHIC TERMINAL
ENG. [illegible]	DATE 10-13-72	
PROJ. ENG. H E Lavoie	DATE 10/13/72	
PROD. [illegible]	DATE 10/24/72	
NEXT HIGHER ASSEMBLY B-DD-GT4Ø-Ø		SIZE K · CODE WL · NUMBER GT4Ø-Ø-WL · REV. B
SCALE — // —		
SHEET 1 OF		DIST.

DEC FORM NO. DRB 109

RUN NAME	A/P	PIN NAME	ORDER PIN	BAY - ORDER	Q	DRAW RV PG Y	X	±	REMARKS	LENGTH	EXCEPTIONS	RUN NUMBER
+15V		E09P2		1-01 *	H			2	24 AWG		HAND WIRE	1
+15V		F01R2		1-02 *	H			1	24AWG		HAND WIRE	1
+15V		D03R2		1-03 *	H			2	24AWG		HAND WIRE	1
+15V		C04U1		1-04 *					24AWG		TO HERE	1
+15V				1						20-2/8		1
+5 VDC		A01A2		1-01 *	H			2		P	HAND WIRE	2
+5 VDC		A02A2		1-02 *	H			1		P	HAND WIRE	2
+5 VDC		A03A2		1-03 *	H			2		P	HAND WIRE	2
+5 VDC		A04A2		1-04 *	H			1		P	HAND WIRE	2
+5 VDC		A05A2		1-05 *	H			2		P	HAND WIRE	2
+5 VDC		A06A2		1-06 *	H			1		P	HAND WIRE	2
+5 VDC		A07A2		1-07 *	H			2		P	HAND WIRE	2
+5 VDC		A09A2		1-08 *	H			1		P	HAND WIRE	2
+5 VDC		A08A2		1-09 *	H			2		P	HAND WIRE	2
+5 VDC		B09A2		1-10 *	H			1		P	HAND WIRE	2
+5 VDC		B08A2		1-11 *	H			2		P	HAND WIRE	2
+5 VDC		B07A2		1-12 *	H			1		P	HAND WIRE	2
+5 VDC		B06A2		1-13 *	H			2		P	HAND WIRE	2
+5 VDC		B05A2		1-14 *	H			1		P	HAND WIRE	2
+5 VDC		B04A2		1-15 *	H			2		P	HAND WIRE	2
+5 VDC		B03A2	B02A2	1-16 *	H			1		P	HAND WIRE	2
+5 VDC		B02A2		1-17 *	H			2		P	HAND WIRE	2
+5 VDC		B0181		1-18 *	H			1		P	HAND WIRE	2
+5 VDC		B01A2		1-19 *	H			2		P	HAND WIRE	2
+5 VDC		C01A2		1-20 *	H			1		P	HAND WIRE	2
+5 VDC		C02A2		1-21 *	H			2		P	HAND WIRE	2
+5 VDC		C03A2		1-22 *	H			1		P	HAND WIRE	2
+5 VDC		C04A2		1-23 *	H			2		P	HAND WIRE	2
+5 VDC		C05A2		1-24 *	H			1		P	HAND WIRE	2
+5 VDC		C06A2		1-25 *	H			2		P	HAND WIRE	2
+5 VDC		C07A2		1-26 *	H			1		P	HAND WIRE	2
+5 VDC		C08A2		1-27 *	H			2		P	HAND WIRE	2
+5 VDC		C09A2		1-28 *	H			1		P	HAND WIRE	2
+5 VDC		D09A2	D08A2	1-29 *	H			2		P	HAND WIRE	2
+5 VDC		D08A2		1-30 *	H			1		P	HAND WIRE	2
+5 VDC		D07A2		1-31 *	H			2		P	HAND WIRE	2
+5 VDC		D06A2		1-32 *	H			1		P	HAND WIRE	2
+5 VDC		D05A2		1-33 *	H			2		P	HAND WIRE	2
+5 VDC		D04A2		1-34 *	H			1		P	HAND WIRE	2
+5 VDC		D03A2		1-35 *	H			2		P	HAND WIRE	2
+5 VDC		D02A2		1-36 *	H			1		P	HAND WIRE	2
+5 VDC		D01A2		1-37 *	H			2		P	HAND WIRE	2
+5 VDC		E01A2		1-38 *	H			1		P	HAND WIRE	2
+5 VDC		E02A2		1-39 *	H			2		P	HAND WIRE	2
+5 VDC		E03A2		1-40 *	H			1		P	HAND WIRE	2
+5 VDC		E04A2		1-41 *	H			2		P	HAND WIRE	2
+5 VDC		E05A2		1-42 *	H			1		P	HAND WIRE	2
+5 VDC		E06A2		1-43 *	H			2		P	HAND WIRE	2
+5 VDC		E07A2		1-44 *	H			1		P	HAND WIRE	2
+5 VDC		E08A2		1-45 *	H			2		P	HAND WIRE	2
+5 VDC		E09A2		1-46 *	H			1		P	HAND WIRE	2
+5 VDC		F09A2		1-47 *	H			2		P	HAND WIRE	2
+5 VDC		F08A2		1-48 *	H			1		P	HAND WIRE	2
+5 VDC		F07A2		1-49 *	H			2		P	HAND WIRE	2
+5 VDC		F06A2		1-50 *	H			1		P	HAND WIRE	2

RUN NAME	A/P	PIN NAME	ORDER PIN	BAY - ORDER	Q	DRAW RV PG Y	X	±	REMARKS	LENGTH	EXCEPTIONS	RUN NUMBER
+5 VDC		F05A2		1-51 *	H			2		P	HAND WIRE	2
+5 VDC		F04A2		1-52 *	H			1		P	HAND WIRE	2
+5 VDC		F03A2		1-53 *	H			2		P	HAND WIRE	2
+5 VDC		F02A2		1-54 *	H			1		P	HAND WIRE	2
+5 VDC		F01A2		1-55 *	H					P	H TO WHERE	2
+5 VDC				1						160-0/8		2
-15V		C07B2		1-01 *	H			2		P	HAND WIRE	3
-15V		C06B2		1-02 *	H			1		P	HAND WIRE	3
-15V		C05B2		1-03 *	H			2		P	HAND WIRE	3
-15V		C04B2		1-04 *	H			1		P	HAND WIRE	3
-15V		D04B2		1-05 *	H			2		P	HAND WIRE	3
-15V		D05B2		1-06 *	H			1		P	HAND WIRE	3
-15V		D06B2		1-07 *	H			2		P	HAND WIRE	3
-15V		D07B2		1-08 *	H			1		P	HAND WIRE	3
-15V		E07B2		1-09 *	H			2		P	HAND WIRE	3
-15V		E06B2		1-10 *	H			1		P	HAND WIRE	3
-15V		E05B2		1-11 *	H			2		P	HAND WIRE	3
-15V		E04B2		1-12 *	H			1		P	HAND WIRE	3
-15V		F04B2		1-13 *	H			2		P	HAND WIRE	3
-15V		F05B2		1-14 *	H			1		P	HAND WIRE	3
-15V		F06B2		1-15 *	H			2		P	HAND WIRE	3
-15V		F07B2		1-16 *	H			1		P	HAND WIRE	3
-15V		F09B2		1-17 *							TO HERE	3
-15V				1						51-0/8		3
00 IN		E05U2		1-01 *	H			2		P	HAND WIRE	4
00 IN		E06U2		1-02 *	H			1		P	HAND WIRE	4
00 IN		E07U2		1-03 *							TO HERE	4
00 IN				1						5-4/8		4
00 SA		E05V1		1-01 *	H			2		P	HAND WIRE	5
00 SA		E06V1		1-02 *	H			1		P	HAND WIRE	5
00 SA		E07V1		1-03 *							TO HERE	5
00 SA				1						5-4/8		5
00 SB		E05V2		1-01 *	H			2		P	HAND WIRE	6
00 SB		E06V2		1-02 *	H			1		P	HAND WIRE	6
00 SB		E07V2		1-03 *							TO HERE	6
00 SB				1						5-4/8		6
01 IN		E07R1		1-01 *	H			2		P	HAND WIRE	7
01 IN		E06R1		1-02 *	H			1		P	HAND WIRE	7
01 IN		E05R1		1-03 *							TO HERE	7
01 IN				1						5-4/8		7

RUN NAME	A/P	PIN NAME	ORDER PIN	BAY - ORDER	Q	DRAW RV PG	Y	X	℄	REMARKS	LENGTH	EXCEPTIONS	RUN NUMBER
01 SA		E05P1		1-01 *	H				2		P	HAND WIRE	8
01 SA		E06P1		1-02 *	H				1		P	HAND WIRE	8
01 SA		E07P1		1-03 *								TO HERE	8
01 SA				1							5-4/8		8
01 SB		E05P2		1-01 *	H				2		P	HAND WIRE	9
01 SB		E06P2		1-02 *	H				1		P	HAND WIRE	9
01 SB		E07P2		1-03 *								TO HERE	9
01 SB				1							5-4/8		9
02 IN		E05M1		1-01 *	H				2		P	HAND WIRE	10
02 IN		E06M1		1-02 *	H				1		P	HAND WIRE	10
02 IN		E07M1		1-03 *								TO HERE	10
02 IN				1							5-4/8		10
02 SA		E05L1		1-01 *	H				2		P	HAND WIRE	11
02 SA		E06L1		1-02 *	H				1		P	HAND WIRE	11
02 SA		E07L1		1-03 *								TO HERE	11
02 SA				1							5-4/8		11
02 SB		E05L2		1-01 *	H				2		P	HAND WIRE	12
02 SB		E06L2		1-02 *	H				1		P	HAND WIRE	12
02 SB		E07L2		1-03 *								TO HERE	12
02 SB				1							5-4/8		12
03 IN		E05J1		1-01 *	H				2		P	HAND WIRE	13
03 IN		E06J1		1-02 *	H				1		P	HAND WIRE	13
03 IN		E07J1		1-03 *								TO HERE	13
03 IN				1							5-4/8		13
03 SA		E05H1		1-01 *	H				2		P	HAND WIRE	14
03 SA		E06H1		1-02 *	H				1		P	HAND WIRE	14
03 SA		E07H1		1-03 *								TO HERE	14
03 SA				1							5-4/8		14
03 SB		E05H2		1-01 *	H				2		P	HAND WIRE	15
03 SB		E06H2		1-02 *	H				1		P	HAND WIRE	15
03 SB		E07H2		1-03 *								TO HERE	15
03 SB				1							5-4/8		15
04 IN		E05R2		1-01 *	H				2		P	HAND WIRE	16
04 IN		E06R2		1-02 *	H				1		P	HAND WIRE	16
04 IN		E07R2		1-03 *								TO HERE	16
04 IN				1							5-4/8		16

RUN NAME	A/P	PIN NAME	ORDER PIN	BAY - ORDER	Q	DRAW RV PG	Y	X	℄	REMARKS	LENGTH	EXCEPTIONS	RUN NUMBER
04 SA		E05S1		1-01 *	H				2		P	HAND WIRE	17
04 SA		E06S1		1-02 *	H				1		P	HAND WIRE	17
04 SA		E07S1		1-03 *								TO HERE	17
04 SA				1							5-4/8		17
04 SB		E05S2		1-01 *	H				2		P	HAND WIRE	18
04 SB		E06S2		1-02 *	H				1		P	HAND WIRE	18
04 SB		E07S2		1-03 *								TO HERE	18
04 SB				1							5-4/8		18
05 IN		E05M2		1-01 *	H				2		P	HAND WIRE	19
05 IN		E06M2		1-02 *	H				1		P	HAND WIRE	19
05 IN		E07M2		1-03 *								TO HERE	19
05 IN				1							5-4/8		19
05 SA		E05N1		1-01 *	H				2		P	HAND WIRE	20
05 SA		E06N1		1-02 *	H				1		P	HAND WIRE	20
05 SA		E07N1		1-03 *								TO HERE	20
05 SA				1							5-4/8		20
05 SB		E05N2		1-01 *	H				2		P	HAND WIRE	21
05 SB		E06N2		1-02 *	H				1		P	HAND WIRE	21
05 SB		E07N2		1-03 *								TO HERE	21
05 SB				1							5-4/8		21
06 IN		E05J2		1-01 *	H				2		P	HAND WIRE	22
06 IN		E06J2		1-02 *	H				1		P	HAND WIRE	22
06 IN		E07J2		1-03 *								TO HERE	22
06 IN				1							5-4/8		22
06 SA		E05K1		1-01 *	H				2		P	HAND WIRE	23
06 SA		E06K1		1-02 *	H				1		P	HAND WIRE	23
06 SA		E07K1		1-03 *								TO HERE	23
06 SA				1							5-4/8		23
06 SB		E05K2		1-01 *	H				2		P	HAND WIRE	24
06 SB		E06K2		1-02 *	H				1		P	HAND WIRE	24
06 SB		E07K2		1-03 *								TO HERE	24
06 SB				1							5-4/8		24
07 IN		E05E2		1-01 *	H				2		P	HAND WIRE	25
07 IN		E06E2		1-02 *	H				1		P	HAND WIRE	25
07 IN		E07E2		1-03 *								TO HERE	25
07 IN				1							5-4/8		25

RUN NAME	A/P	PIN NAME	ORDER PIN	BAY - ORDER	Q	DRAW	RV	PG	Y	X	±	REMARKS	LENGTH	EXCEPTIONS	RUN NUMBER
07 SA		E05F1		1-01 *	H						2		P	HAND WIRE	26
07 SA		E06F1		1-02 *	H						1		P	HAND WIRE	26
07 SA		E07F1		1-03 *										TO HERE	26
07 SA				1									5-4/8		26
07 SB		E05F2		1-01 *	H						2		P	HAND WIRE	27
07 SB		E06F2		1-02 *	H						1		P	HAND WIRE	27
07 SB		E07F2		1-03 *										TO HERE	27
07 SB				1									5-4/8		27
08 IN		E05E1		1-01 *	H						2		P	HAND WIRE	28
08 IN		E06E1		1-02 *	H						1		P	HAND WIRE	28
08 IN		E07E1		1-03 *										TO HERE	28
08 IN				1									5-4/8		28
08 SA		E05D1		1-01 *	H						2		P	HAND WIRE	29
08 SA		E06D1		1-02 *	H						1		P	HAND WIRE	29
08 SA		E07D1		1-03 *										TO HERE	29
08 SA				1									5-4/8		29
08 SB		E05D2		1-01 *	H						2		P	HAND WIRE	30
08 SB		E06D2		1-02 *	H						1		P	HAND WIRE	30
08 SB		E07D2		1-03 *										TO HERE	30
08 SB				1									5-4/8		30
09 IN		D05U2		1-01 *	H						2		P	HAND WIRE	31
09 IN		D06U2		1-02 *	H						1		P	HAND WIRE	31
09 IN		D07U2		1-03 *										TO HERE	31
09 IN				1									5-4/8		31
09 SA		D05V1		1-01 *	H						2		P	HAND WIRE	32
09 SA		D06V1		1-02 *	H						1		P	HAND WIRE	32
09 SA		D07V1		1-03 *										TO HERE	32
09 SA				1									5-4/8		32
09 SB		D05V2		1-01 *	H						2		P	HAND WIRE	33
09 SB		D06V2		1-02 *	H						1		P	HAND WIRE	33
09 SB		D07V2		1-03 *										TO HERE	33
09 SB				1									5-4/8		33
10 IN		D05R1		1-01 *	H						2		P	HAND WIRE	34
10 IN		D06R1		1-02 *	H						1		P	HAND WIRE	34
10 IN		D07R1		1-03 *										TO HERE	34
10 IN				1									5-4/8		34

RUN NAME	A/P	PIN NAME	ORDER PIN	BAY - ORDER	Q	DRAW	RV	PG	Y	X	±	REMARKS	LENGTH	EXCEPTIONS	RUN NUMBER
10 SA		D05P1		1-01 *							2		P		35
10 SA		D06P1		1-02 *	H						1		P	HAND WIRE	35
10 SA		D07P1		1-03 *										TO HERE	35
10 SA				1									5-4/8		35
10 SB		D05P2		1-01 *	H						2		P	HAND WIRE	36
10 SB		D06P2		1-02 *	*						1		P	TO HERE	36
10 SB		D07P2		1-03 *											36
10 SB				1									5-4/8		36
11 IN		D05M1		1-01 *	H						2		P	HAND WIRE	37
11 IN		D06M1		1-02 *	H						1		P	HAND WIRE	37
11 IN		D07M1		1-03 *										TO HERE	37
11 IN				1									5-4/8		37
11 SA		D05L1		1-01 *	H						2		P	HAND WIRE	38
11 SA		D06L1		1-02 *	H						1		P	HAND WIRE	38
11 SA		D07L1		1-03 *										TO HERE	38
11 SA				1									5-4/8		38
11 SB		D05L2		1-01 *	H						2		P	HAND WIRE	39
11 SB		D06L2		1-02 *	H						1		P	HAND WIRE	39
11 SB		D07L2		1-03 *										TO HERE	39
11 SB				1									5-4/8		39
12 IN		D05J1		1-01 *	H						2		P	HAND WIRE	40
12 IN		D06J1		1-02 *	H						1		P	HAND WIRE	40
12 IN		D07J1		1-03 *										TO HERE	40
12 IN				1									5-4/8		40
12 SA		D05H1		1-01 *	H						2		P	HAND WIRE	41
12 SA		D06H1		1-02 *	H						1		P	HAND WIRE	41
12 SA		D07H1		1-03 *										TO HERE	41
12 SA				1									5-4/8		41
12 SB		D05H2		1-01 *	H						2		P	HAND WIRE	42
12 SB		D06H2		1-02 *	H						1		P	HAND WIRE	42
12 SB		D07H2		1-03 *										TO HERE	42
12 SB				1									5-4/8		42
13 IN		D05R2		1-01 *	H						2		P	HAND WIRE	43
13 IN		D06R2		1-02 *	H						1		P	HAND WIRE	43
13 IN		D07R2		1-03 *										TO HERE	43
13 IN				1									5-4/8		43

RUN NAME	A/P	PIN NAME	ORDER PIN	BAY - ORDER	Q	DRAW RV PG Y	X	Z	REMARKS	LENGTH	EXCEPTIONS	RUN NUMBER
13 SA		D05S1		1-01 *	H			2		P	HAND WIRE	44
13 SA		D06S1		1-02 *	H			1		P	HAND WIRE	44
13 SA		D07S1		1-03 *							TO HERE	44
13 SA				1						5-4/8		44
13 SB		D05S2		1-01 *	H			2		P	HAND WIRE	45
13 SB		D06S2		1-02 *	H			1		P	HAND WIRE	45
13 SB		D07S2		1-03 *							TO HERE	45
13 SB				1						5-4/8		45
14 IN		D05M2		1-01 *	H			2		P	HAND WIRE	46
14 IN		D06M2		1-02 *	H			1		P	HAND WIRE	46
14 IN		D07M2		1-03 *							TO HERE	46
14 IN				1						5-4/8		46
14 SA		D05N1		1-01 *	H			2		P	HAND WIRE	47
14 SA		D06N1		1-02 *	H			1		P	HAND WIRE	47
14 SA		D07N1		1-03 *							TO HERE	47
14 SA				1						5-4/8		47
14 SB		D05N2		1-01 *	H			2		P	HAND WIRE	48
14 SB		D06N2		1-02 *	H			1		P	HAND WIRE	48
14 SB		D07N2		1-03 *							TO HERE	48
14 SB				1						5-4/8		48
15 IN		D05J2		1-01 *	H			2		P	HAND WIRE	49
15 IN		D06J2		1-02 *	H			1		P	HAND WIRE	49
15 IN		D07J2		1-03 *							TO HERE	49
15 IN				1						5-4/8		49
15 SA		D05K1		1-01 *	H			2		P	HAND WIRE	50
15 SA		D06K1		1-02 *	H			1		P	HAND WIRE	50
15 SA		D07K1		1-03 *							TO HERE	50
15 SA				1						5-4/8		50
15 SB		D05K2		1-01 *	H			2		P	HAND WIRE	51
15 SB		D06K2		1-02 *	H			1		P	HAND WIRE	51
15 SB		D07K2		1-03 *							TO HERE	51
15 SB				1						5-4/8		51
A BG IN	H	D04U2		1-01 *				1				52
A BG IN	H	F04B1		1-02 *								52
A BG IN				1						5-6/8		52
A BG OUT	H	D04V2		1-01 *				1				53
A BG OUT	H	F04A1		1-02 *								53
A BG OUT				1						5-6/8		53

RUN NAME	A/P	PIN NAME	ORDER PIN	BAY - ORDER	Q	DRAW RV PG Y	X	Z	REMARKS	LENGTH	EXCEPTIONS	RUN NUMBER
A BR OUT	L	D04J2		1-01 *				1				54
A BR OUT	L	F04P1		1-02 *				2				54
A BR OUT	L	F04U2		1-03 *								54
A BR OUT				1						11-4/8		54
A IN	H	D04H1		1-01 *				1				55
A IN	H	E04M1		1-02 *								55
A IN				1						5-2/8		55
A INT A	H	D04N1		1-01 *				1				56
A INT A	H	F04U1		1-02 *								56
A INT A				1						8-2/8		56
A INT B	H	C04J1		1-01 *				1				57
A INT B	H	F04K2		1-02 *								57
A INT B				1						10-4/8		57
A INT ENB A	H	D04M1		1-01 *				1				58
A INT ENB A	H	F04V1		1-02 *								58
A INT ENB A				1						8-4/8		58
A INT ENB B	H	C04L1		1-01 *				1				59
A INT ENB B	H	F04H2		1-02 *								59
A INT ENB B				1						10-0/8		59
A OUT HIGH	H	D04K1		1-01 *				1				60
A OUT HIGH	H	E04M2		1-02 *								60
A OUT HIGH				1						5-2/8		60
A OUT LOW	H	D04D1		1-01 *				1				61
A OUT LOW	H	E04N1		1-02 *								61
A OUT LOW				1						5-6/8		61
A SELECT 0	H	D04F1		1-01 *				1				62
A SELECT 0	H	E04S2		1-02 *								62
A SELECT 0				1						6-0/8		62
A SELECT 0	H	D04J1		1-01 *				1				63
A SELECT 0	H	E04T2		1-02 *								63
A SELECT 0				1						6-0/8		63
A SELECT 0	H	D04E1		1-01 *				1				64
A SELECT 0	H	E04R2		1-02 *								64
A SELECT 0				1						6-2/8		64

RUN NAME	A/P	PIN NAME	ORDER PIN	BAY - ORDER	Q	DRAW RV PG Y	X	±	REMARKS	LENGTH	EXCEPTIONS	RUN NUMBER
A SELECT Ø6	H	D04C1		1-01 *				1				65
A SELECT Ø6	H	E04S1		1-02 *								65
A SELECT Ø6				1						6-2/8		65
A SSYN INHIBIT	L	D04V1		1-01 *				1				66
A SSYN INHIBIT	L	E04B1		1-02 *								66
A SSYN INHIBIT				1						2-6/8		66
AØ1	H	D06A1		1-01 *	H			1		P	HAND WIRE	67
AØ1	H	D07A1		1-02 *							TO HERE	67
AØ1				1						2-6/8		67
AØ3E1		A02K1		1-01 *				1				68
AØ3E1		A03E1		1-02 *								68
AØ3E1				1						3-0/8		68
ASL AØ1	H	A03P2	D02P2	1-01 *				1				69
ASL AØ1	H	D02P2		1-02 *								69
ASL AØ1				1						10-4/8		69
ASL AØ2	H	A03L1	D02N2	1-01 *				1				70
ASL AØ2	H	D02N2		1-02 *								70
ASL AØ2				1						10-6/8		70
ASL BELL CHAR	L	D02E2		1-01 *				1				71
ASL BELL CHAR	L	D03H2		1-02 *								71
ASL BELL CHAR				1						3-0/8		71
ASL RESUME	H	A02L2		1-01 *				1				72
ASL RESUME	H	A03F2		1-02 *								72
ASL RESUME				1						3-0/8		72
ASL START	H	A02H1		1-01 *				1				73
ASL START	H	A03H2		1-02 *								73
ASL START				1						3-0/8		73
BCL DATA RDY	H	B02R1		1-01 *				1				74
BCL DATA RDY	H	B03K2		1-02 *								74
BCL DATA RDY				1						3-2/8		74
BCL INIT	H	A03D2		1-01 *				1				75
BCL INIT	H	C02R1		1-02 *								75
BCL INIT				1						9-2/8		75
BCL REQ CLR	L	A02J1		1-01 *				1				76
BCL REQ CLR	L	B03L2		1-02 *								76
BCL REQ CLR				1						5-6/8		76

RUN NAME	A/P	PIN NAME	ORDER PIN	BAY - ORDER	Q	DRAW RV PG Y	X	±	REMARKS	LENGTH	EXCEPTIONS	RUN NUMBER
BDL DB Ø0	H	A03V2		1-01 *				1				77
BDL DB Ø0	H	C02P1		1-02 *				2				77
BDL DB Ø0	H	D01N2		1-03 *								77
BDL DB Ø0				1						12-2/8		77
BDL DB Ø1	H	B03B1		1-01 *				2				78
BDL DB Ø1	H	B02T2		1-02 *				1				78
BDL DB Ø1	H	D01L2		1-03 *								78
BDL DB Ø1				1						11-2/8		78
BDL DB Ø2	H	B03E1		1-01 *				2				79
BDL DB Ø2	H	B02V1		1-02 *				1				79
BDL DB Ø2	H	D01P2		1-03 *								79
BDL DB Ø2				1						11-4/8		79
BDL DB Ø3	H	A03M1		1-01 *				1				80
BDL DB Ø3	H	C02E1		1-02 *				2				80
BDL DB Ø3	H	D01F2		1-03 *								80
BDL DB Ø3				1						12-2/8		80
BDL DB Ø4	H	A03N1		1-01 *				1				81
BDL DB Ø4	H	C02A1		1-02 *				2				81
BDL DB Ø4	H	D01K1		1-03 *								81
BDL DB Ø4				1						12-6/8		81
BDL DB Ø5	H	B03R2		1-01 *				2				82
BDL DB Ø5	H	C02B1		1-02 *				1				82
BDL DB Ø5	H	D01L1		1-03 *								82
BDL DB Ø5				1						10-0/8		82
BDL DB Ø6	H	B02V2		1-01 *				2				83
BDL DB Ø6	H	C03B1		1-02 *				1				83
BDL DB Ø6	H	D01H1		1-03 *								83
BDL DB Ø6				1						9-2/8		83
BDL DB Ø7	H	B03N2		1-01 *				2				84
BDL DB Ø7	H	B02U2		1-02 *				1				84
BDL DB Ø7	H	D01F1		1-03 *								84
BDL DB Ø7				1						9-6/8		84
BDL DB Ø8	H	B03P2		1-01 *				2				85
BDL DB Ø8	H	B02N1		1-02 *				1				85
BDL DB Ø8	H	E01A1		1-03 *								85
BDL DB Ø8				1						12-0/8		85

RUN NAME	A/P	PIN NAME	ORDER PIN	BAY - ORDER	Q	DRAW	RV	PG	Y	X	#	REMARKS	LENGTH	EXCEPTIONS	RUN NUMBER
BDL DB 09	H	C02H2		1-01 *							1				86
BDL DB 09	H	C03L1		1-02 *							2				86
BDL DB 09	H	E01D2		1-03 *											86
BDL DB 09				1									10-2/8		86
BDL DB 10	H	B02F1		1-01 *							1				87
BDL DB 10	H	C03L2		1-02 *											87
BDL DB 10				1									5-6/8		87
BDL DB 11	H	C02M2		1-01 *							1				88
BDL DB 11	H	C03M1		1-02 *											88
BDL DB 11				1									2-4/8		88
BDL DB 12	H	C02K2		1-01 *							1				89
BDL DB 12	H	E03D1		1-02 *											89
BDL DB 12				1									7-2/8		89
BDL DB 13	H	C02K1		1-01 *							1				90
BDL DB 13	H	D03P2		1-02 *											90
BDL DB 13				1									6-0/8		90
BDL DB 14	H	C02J1		1-01 *							1				91
BDL DB 14	H	D03M2		1-02 *											91
BDL DB 14				1									5-6/8		91
BDL DB 15	H	B02J1		1-01 *							1				92
BDL DB 15	H	D03S2		1-02 *											92
BDL DB 15				1									8-6/8		92
BRM COUNT \	H	E01V1		1-01 *							1				93
BRM COUNT \	H	F03H1		1-02 *											93
BRM COUNT \				1									4-0/8		93
BRM COUNT \	H	F01M1		1-01 *							1				94
BRM COUNT \	H	F03F1		1-02 *											94
BRM COUNT \				1									3-6/8		94
BRM DX09	H	D03F1		1-01 *							1				95
BRM DX09	H	E01R1		1-02 *											95
BRM DX09				1									6-2/8		95
BRM DY09	H	D03K1		1-01 *							1				96
BRM DY09	H	F01Q1		1-02 *											96
BRM DY09				1									7-2/8		96

RUN NAME	A/P	PIN NAME	ORDER PIN	BAY - ORDER	Q	DRAW	RV	PG	Y	X	#	REMARKS	LENGTH	EXCEPTIONS	RUN NUMBER
BUS A00	L	B09H2		1-01 *	H						2		P	HAND WIRE	97
BUS A00	L	B05H2		1-02 *	H						1		P	HAND WIRE	97
BUS A00	L	B07H2		1-03 *	H						2		P	HAND WIRE	97
BUS A00	L	B06H2		1-04 *	H						1		P	HAND WIRE	97
BUS A00	L	B08H2		1-05 *							2			TO HERE	97
BUS A00	L	E04H2		1-06 *							1				97
BUS A00	L	A03U1		1-07 *											97
BUS A00				1									36-4/8		97
BUS A01	L	B09H1		1-01 *	H						2		P	HAND WIRE	98
BUS A01	L	B08H1		1-02 *	H						1		P	HAND WIRE	98
BUS A01	L	B07H1		1-03 *	H						2		P	HAND WIRE	98
BUS A01	L	B06H1		1-04 *	H						1		P	HAND WIRE	98
BUS A01	L	B05H1		1-05 *							2			TO HERE	98
BUS A01	L	E04H1		1-06 *							1				98
BUS A01	L	A03K1		1-07 *											98
BUS A01				1									34-0/8		98
BUS A02	L	B09J2		1-01 *	H						2		P	HAND WIRE	99
BUS A02	L	B08J2		1-02 *	H						1		P	HAND WIRE	99
BUS A02	L	B07J2		1-03 *	H						2		P	HAND WIRE	99
BUS A02	L	B06J2		1-04 *	H						1		P	HAND WIRE	99
BUS A02	L	B05J2		1-05 *							2			TO HERE	99
BUS A02	L	E04F1		1-06 *							1				99
BUS A02	L	A03P1		1-07 *											99
BUS A02				1									33-4/8		99
BUS A03	L	B09J1		1-01 *	H						2		P	HAND WIRE	100
BUS A03	L	B08J1		1-02 *	H						1		P	HAND WIRE	100
BUS A03	L	B07J1		1-03 *	H						2		P	HAND WIRE	100
BUS A03	L	B06J1		1-04 *	H						1		P	HAND WIRE	100
BUS A03	L	B05J1		1-05 *							2			TO HERE	100
BUS A03	L	E04V2		1-06 *							1				100
BUS A03	L	A03R1		1-07 *											100
BUS A03				1									36-2/8		100
BUS A04	L	B09K2		1-01 *	H						2		P	HAND WIRE	101
BUS A04	L	B08K2		1-02 *	H						1		P	HAND WIRE	101
BUS A04	L	B07K2		1-03 *	H						2		P	HAND WIRE	101
BUS A04	L	B06K2		1-04 *	H						1		P	HAND WIRE	101
BUS A04	L	B05K2		1-05 *							2			TO HERE	101
BUS A04	L	E04U2		1-06 *							1				101
BUS A04	L	A03J1		1-07 *											101
BUS A04				1									36-4/8		101

RUN NAME	A/P	PIN NAME	ORDER PIN	BAY - ORDER	Q	DRAW RV PG Y	X	℄	REMARKS	LENGTH	EXCEPTIONS	RUN NUMBER
BUS A05	L	B09K1		1-01 *	H			2		P	HAND WIRE	102
BUS A05	L	B08K1		1-02 *	H			1		P	HAND WIRE	102
BUS A05	L	B07K1		1-03 *	H			2		P	HAND WIRE	102
BUS A05	L	B06K1		1-04 *	H			1		P	HAND WIRE	102
BUS A05	L	B05K1		1-05 *				2			TO HERE	102
BUS A05	L	E04V1		1-06 *				1				102
BUS A05	L	B03J2		1-07 *								102
BUS A05				1						34-0/8		102
BUS A06	L	B09L2		1-01 *	H			1		P	HAND WIRE	103
BUS A06	L	B08L2		1-02 *	H			2		P	HAND WIRE	103
BUS A06	L	B07L2		1-03 *	H			1		P	HAND WIRE	103
BUS A06	L	B06L2		1-04 *	H			2		P	HAND WIRE	103
BUS A06	L	B05L2		1-05 *				1			TO HERE	103
BUS A06	L	E04U1		1-06 *				2				103
BUS A06	L	B03M1		1-07 *								103
BUS A06				1						33-2/8		103
BUS A07	L	B09L1		1-01 *	H			2		P	HAND WIRE	104
BUS A07	L	B08L1		1-02 *	H			1		P	HAND WIRE	104
BUS A07	L	B07L1		1-03 *	H			2		P	HAND WIRE	104
BUS A07	L	B06L1		1-04 *	H			1		P	HAND WIRE	104
BUS A07	L	B05L1		1-05 *				2			TO HERE	104
BUS A07	L	E04P2		1-06 *				1				104
BUS A07	L	B03N1		1-07 *								104
BUS A07				1						32-2/8		104
BUS A08	L	B09M2		1-01 *	H			2		P	HAND WIRE	105
BUS A08	L	B08M2		1-02 *	H			1		P	HAND WIRE	105
BUS A08	L	B07M2		1-03 *	H			2		P	HAND WIRE	105
BUS A08	L	B06M2		1-04 *	H			1		P	HAND WIRE	105
BUS A08	L	B05M2		1-05 *				2			TO HERE	105
BUS A08	L	E04N2		1-06 *				1				105
BUS A08	L	B03P1		1-07 *								105
BUS A08				1						31-6/8		105
BUS A09	L	B09M1		1-01 *	H			1		P	HAND WIRE	106
BUS A09	L	B08M1		1-02 *	H			2		P	HAND WIRE	106
BUS A09	L	B07M1		1-03 *	H			1		P	HAND WIRE	106
BUS A09	L	B06M1		1-04 *	H			2		P	HAND WIRE	106
BUS A09	L	B05M1		1-05 *				1			TO HERE	106
BUS A09	L	E04R1		1-06 *				2				106
BUS A09	L	C03E2		1-07 *								106
BUS A09				1						30-6/8		106

RUN NAME	A/P	PIN NAME	ORDER PIN	BAY - ORDER	Q	DRAW RV PG Y	X	℄	REMARKS	LENGTH	EXCEPTIONS	RUN NUMBER
BUS A10	L	B09N2		1-01 *	H			1		P	HAND WIRE	107
BUS A10	L	B08N2		1-02 *	H			2		P	HAND WIRE	107
BUS A10	L	B07N2		1-03 *	H			1		P	HAND WIRE	107
BUS A10	L	B06N2		1-04 *	H			2		P	HAND WIRE	107
BUS A10	L	B05N2		1-05 *				1			TO HERE	107
BUS A10	L	E04P1		1-06 *				2				107
BUS A10	L	C03F2		1-07 *								107
BUS A10				1						30-0/8		107
BUS A11	L	B09N1		1-01 *	H			1		P	HAND WIRE	108
BUS A11	L	B08N1		1-02 *	H			2		P	HAND WIRE	108
BUS A11	L	B07N1		1-03 *	H			1		P	HAND WIRE	108
BUS A11	L	B06N1		1-04 *	H			2		P	HAND WIRE	108
BUS A11	L	B05N1		1-05 *				1			TO HERE	108
BUS A11	L	E04L1		1-06 *				2				108
BUS A11	L	C03H2		1-07 *								108
BUS A11				1						29-2/8		108
BUS A12	L	B09P2		1-01 *	H			1		P	HAND WIRE	109
BUS A12	L	B08P2		1-02 *	H			2		P	HAND WIRE	109
BUS A12	L	B07P2		1-03 *	H			1		P	HAND WIRE	109
BUS A12	L	B06P2		1-04 *	H			2		P	HAND WIRE	109
BUS A12	L	B05P2		1-05 *				1			TO HERE	109
BUS A12	L	E04C1		1-06 *				2				109
BUS A12	L	C03P1		1-07 *								109
BUS A12				1						26-6/8		109
BUS A13	L	B09P1		1-01 *	H			1		P	HAND WIRE	110
BUS A13	L	B08P1		1-02 *	H			2		P	HAND WIRE	110
BUS A13	L	B07P1		1-03 *	H			1		P	HAND WIRE	110
BUS A13	L	B06P1		1-04 *	H			2		P	HAND WIRE	110
BUS A13	L	B05P1		1-05 *				1			TO HERE	110
BUS A13	L	E04K2		1-06 *				2				110
BUS A13	L	D03D2		1-07 *								110
BUS A13				1						26-4/8		110
BUS A14	L	B09R2		1-01 *	H			1		P	HAND WIRE	111
BUS A14	L	B08R2		1-02 *	H			2		P	HAND WIRE	111
BUS A14	L	B07R2		1-03 *	H			1		P	HAND WIRE	111
BUS A14	L	B06R2		1-04 *	H			2		P	HAND WIRE	111
BUS A14	L	B05R2		1-05 *				1			TO HERE	111
BUS A14	L	E04K1		1-06 *				2				111
BUS A14	L	D03F2		1-07 *								111
BUS A14				1						26-0/8		111

RUN NAME	A/P	PIN NAME	ORDER PIN	BAY - ORDER	Q	DRAW RV PG Y	X	±	REMARKS	LENGTH	EXCEPTIONS	RUN NUMBER
BUS A15	L	B09R1		1-01 *	H			1		P	HAND WIRE	112
BUS A15	L	B08R1		1-02 *	H			2		P	HAND WIRE	112
BUS A15	L	B07R1		1-03 *	H			1		P	HAND WIRE	112
BUS A15	L	B06R1		1-04 *	H			2		P	HAND WIRE	112
BUS A15	L	B05R1		1-05 *				1			TO HERE	112
BUS A15	L	E04D2		1-06 *				2				112
BUS A15	L	D03N1		1-07 *								112
BUS A15				1						24-2/8		112
BUS A16	L	B09S2		1-01 *	H			1		P	HAND WIRE	113
BUS A16	L	B08S2		1-02 *	H			2		P	HAND WIRE	113
BUS A16	L	B07S2		1-03 *	H			1		P	HAND WIRE	113
BUS A16	L	B06S2		1-04 *	H			2		P	HAND WIRE	113
BUS A16	L	B05S2		1-05 *				1			TO HERE	113
BUS A16	L	E04E2		1-06 *				2				113
BUS A16	L	D03J1		1-07 *								113
BUS A16				1						24-6/8		113
BUS A17	L	B09S1		1-01 *	H			1		P	HAND WIRE	114
BUS A17	L	B08S1		1-02 *	H			2		P	HAND WIRE	114
BUS A17	L	B07S1		1-03 *	H			1		P	HAND WIRE	114
BUS A17	L	B06S1		1-04 *	H			2		P	HAND WIRE	114
BUS A17	L	B05S1		1-05 *				1			TO HERE	114
BUS A17	L	E04D1		1-06 *				2				114
BUS A17	L	D03B1		1-07 *								114
BUS A17				1						25-2/8		114
BUS AC LO	L	B05F1		1-01 *	H			1		P	HAND WIRE	115
BUS AC LO	L	B06F1		1-02 *	H			2		P	HAND WIRE	115
BUS AC LO	L	B07F1		1-03 *	H			1		P	HAND WIRE	115
BUS AC LO	L	B08F1		1-04 *	H			2		P	HAND WIRE	115
BUS AC LO	L	B09F1		1-05 *				1			TO HERE	115
BUS AC LO	L	C04V1		1-06 *				2				115
BUS AC LO	L	F03E2		1-07 *				1				115
BUS AC LO	L	B01B2	F01K1	1-08 *				2				115
BUS AC LO	L	F01K1		1-09 *								115
BUS AC LO				1						55-0/8		115
BUS BBSY	L	A09P2		1-01 *	H			2		P	HAND WIRE	116
BUS BBSY	L	A08P2		1-02 *	H			1		P	HAND WIRE	116
BUS BBSY	L	A07P2		1-03 *	H			2		P	HAND WIRE	116
BUS BBSY	L	A06P2		1-04 *	H			1		P	HAND WIRE	116
BUS BBSY	L	A05P2		1-05 *				2			TO HERE	116
BUS BBSY	L	F04D1		1-06 *				1				116
BUS BBSY	L	A03F1		1-07 *				2				116
BUS BBSY	L	B01E2		1-08 *								116
BUS BBSY				1						46-4/8		116

RUN NAME	A/P	PIN NAME	ORDER PIN	BAY - ORDER	Q	DRAW RV PG Y	X	±	REMARKS	LENGTH	EXCEPTIONS	RUN NUMBER
BUS BG 04 OUT 3	H	D04S2		1-01 *				1				117
BUS BG 04 OUT 3	H	E03L1		1-02 *								117
BUS BG 04 OUT 3				1						4-4/8		117
BUS BG 05	H	B06B1		1-01 *	H			2		P	HAND WIRE	118
BUS BG 05	H	B07B1		1-02 *	H			1		P	HAND WIRE	118
BUS BG 05	H	B08B1		1-03 *	H			2		P	HAND WIRE	118
BUS BG 05	H	B09B1		1-04 *				1			TO HERE	118
BUS BG 05	H	E03P2		1-05 *								118
BUS BG 05				1						21-0/8		118
BUS BG 05 OUT 03	H	D04P2		1-01 *				1				119
BUS BG 05 OUT 03	H	E03R2		1-02 *								119
BUS BG 05 OUT 03				1						5-2/8		119
BUS BG 4	H	B06E2		1-01 *	H			2		P	HAND WIRE	120
BUS BG 4	H	B07E2		1-02 *	H			1		P	HAND WIRE	120
BUS BG 4	H	B08E2		1-03 *	H			2		P	HAND WIRE	120
BUS BG 4	H	B09E2		1-04 *				1			TO HERE	120
BUS BG 4	H	E03M1		1-05 *								120
BUS BG 4				1						20-4/8		120
BUS BG 4 OUT 04		D04T2		1-01 *				1				121
BUS BG 4 OUT 04		B05E2		1-02 *								121
BUS BG 4 OUT 04				1						9-2/8		121
BUS BG 5 OUT 04		D04R2		1-01 *				1				122
BUS BG 5 OUT 04		B05B1		1-02 *								122
BUS BG 5 OUT 04				1						9-2/8		122
BUS BG 6	H	B06A1		1-01 *	H			2		P	HAND WIRE	123
BUS BG 6	H	B07A1		1-02 *	H			1		P	HAND WIRE	123
BUS BG 6	H	B08A1		1-03 *	H			2		P	HAND WIRE	123
BUS BG 6	H	B09A1		1-04 *				1			TO HERE	123
BUS BG 6	H	E03R1		1-05 *								123
BUS BG 6				1						21-2/8		123
BUS BG 6 OUT 03		E03N2		1-01 *				1				124
BUS BG 6 OUT 03		D04M2		1-02 *								124
BUS BG 6 OUT 03				1						5-2/8		124
BUS BG 6 OUT 04		D04N2		1-01 *				1				125
BUS BG 6 OUT 04		B05A1		1-02 *								125
BUS BG 6 OUT 04				1						9-0/8		125

RUN NAME	A/P	PIN NAME	ORDER PIN	BAY - ORDER	Q	DRAW RV PG Y	X	#	REMARKS	LENGTH	EXCEPTIONS	RUN NUMBER
BUS BG 7	H	A06V1		1-01 *	H			2		P	HAND WIRE	126
BUS BG 7	H	A07V1		1-02 *	H			1		P	HAND WIRE	126
BUS BG 7	H	A08V1		1-03 *	H			2		P	HAND WIRE	126
BUS BG 7	H	A09V1		1-04 *				1			TO HERE	126
BUS BG 7	H	D03S1		1-05 *								126
BUS BG 7				1						19-4/8		126
BUS BG 7 OUT 03		E03S1		1-01 *				1				127
BUS BG 7 OUT 03		D04K2		1-02 *								127
BUS BG 7 OUT 03				1						6-0/8		127
BUS BG 7 OUT 04		D04L2		1-01 *				1				128
BUS BG 7 OUT 04		A05V1		1-02 *								128
BUS BG 7 OUT 04				1						9-4/8		128
BUS BR 4	L	B05D2		1-01 *	H			1		P	HAND WIRE	129
BUS BR 4	L	B06D2		1-02 *	H			2		P	HAND WIRE	129
BUS BR 4	L	B07D2		1-03 *	H			1		P	HAND WIRE	129
BUS BR 4	L	B08D2		1-04 *	H			2		P	HAND WIRE	129
BUS BR 4	L	B09D2		1-05 *				1			TO HERE	129
BUS BR 4	L	D04H2		1-06 *				2				129
BUS BR 4	L	E03K1		1-07 *								129
BUS BR 4				1						25-4/8		129
BUS BR 5	L	B05C1		1-01 *	H			1		P	HAND WIRE	130
BUS BR 5	L	B06C1		1-02 *	*			2		P	TO HERE	130
BUS BR 5	L	B07C1		1-03 *	H			1		P	HAND WIRE	130
BUS BR 5	L	B08C1		1-04 *	H			2		P	HAND WIRE	130
BUS BR 5	L	B09C1		1-05 *				1			TO HERE	130
BUS BR 5	L	D04F2		1-06 *				2				130
BUS BR 5	L	E03J1		1-07 *								130
BUS BR 5				1						25-4/8		130
BUS BR 6	L	A05U2		1-01 *	H			1		P	HAND WIRE	131
BUS BR 6	L	A06U2		1-02 *	H			2		P	HAND WIRE	131
BUS BR 6	L	A07U2		1-03 *	H			1		P	HAND WIRE	131
BUS BR 6	L	A08U2		1-04 *	H			2		P	HAND WIRE	131
BUS BR 6	L	A09U2		1-05 *				1			TO HERE	131
BUS BR 6	L	D04E2		1-06 *				2				131
BUS BR 6	L	E03H1		1-07 *								131
BUS BR 6				1						26-4/8		131

RUN NAME	A/P	PIN NAME	ORDER PIN	BAY - ORDER	Q	DRAW RV PG Y	X	#	REMARKS	LENGTH	EXCEPTIONS	RUN NUMBER
BUS BR 7	L	A05T2		1-01 *	H			1		P	HAND WIRE	132
BUS BR 7	L	A06T2		1-02 *	H			2		P	HAND WIRE	132
BUS BR 7	L	A07T2		1-03 *	H			1		P	HAND WIRE	132
BUS BR 7	L	A08T2		1-04 *	H			2		P	HAND WIRE	132
BUS BR 7	L	A09T2		1-05 *				1			TO HERE	132
BUS BR 7	L	D04D2		1-06 *				2				132
BUS BR 7	L	E03F1		1-07 *								132
BUS BR 7				1						26-4/8		132
BUS C0	L	B05U2		1-01 *	H			1		P	HAND WIRE	133
BUS C0	L	B06U2		1-02 *	H			2		P	HAND WIRE	133
BUS C0	L	B07U2		1-03 *	H			1		P	HAND WIRE	133
BUS C0	L	B08U2		1-04 *	H			2		P	HAND WIRE	133
BUS C0	L	B09U2		1-05 *				1			TO HERE	133
BUS C0	L	E04J2		1-06 *				2				133
BUS C0	L	F03B2		1-07 *								133
BUS C0				1						25-4/8		133
BUS C1	L	B05T2		1-01 *	H			2		P	HAND WIRE	134
BUS C1	L	B06T2		1-02 *	H			1		P	HAND WIRE	134
BUS C1	L	B07T2		1-03 *	H			2		P	HAND WIRE	134
BUS C1	L	B08T2		1-04 *	H			1		P	HAND WIRE	134
BUS C1	L	B09T2		1-05 *				2			TO HERE	134
BUS C1	L	E04F2		1-06 *				1				134
BUS C1	L	A03C1		1-07 *								134
BUS C1				1						34-4/8		134
BUS D00	L	B03D2		1-01 *				2				135
BUS D00	L	C04S2		1-02 *				1				135
BUS D00	L	A05C1		1-03 *	H			2		P	HAND WIRE	135
BUS D00	L	A06C1		1-04 *	H			1		P	HAND WIRE	135
BUS D00	L	A07C1		1-05 *	H			2		P	HAND WIRE	135
BUS D00	L	A08C1		1-06 *	H			1		P	HAND WIRE	135
BUS D00	L	A09C1		1-07 *							TO HERE	135
BUS D00				1						26-6/8		135
BUS D01	L	A09D2		1-01 *	H			1		P	HAND WIRE	136
BUS D01	L	A08D2		1-02 *	H			2		P	HAND WIRE	136
BUS D01	L	A07D2		1-03 *	H			1		P	HAND WIRE	136
BUS D01	L	A06D2		1-04 *	H			2		P	HAND WIRE	136
BUS D01	L	A05D2		1-05 *				1			TO HERE	136
BUS D01	L	C04R2		1-06 *				2				136
BUS D01	L	B03F2		1-07 *								136
BUS D01				1						26-0/8		136

RUN NAME	A/P	PIN NAME	ORDER PIN	BAY - ORDER	Q	DRAW RV PG Y	X	≠	REMARKS	LENGTH	EXCEPTIONS	RUN NUMBER
BUS D02	L	A09D1		1-01 *	H			1		P	HAND WIRE	137
BUS D02	L	A08D1		1-02 *	H			2		P	HAND WIRE	137
BUS D02	L	A07D1		1-03 *	H			1		P	HAND WIRE	137
BUS D02	L	A06D1		1-04 *	H			2		P	HAND WIRE	137
BUS D02	L	A05D1		1-05 *				1			TO HERE	137
BUS D02	L	C04U2		1-06 *				2				137
BUS D02	L	F04E2		1-07 *				1				137
BUS D02	L	B03H2		1-08 *								137
BUS D02				1						42-0/8		137
BUS D03	L	A09E2		1-01 *	H			1		P	HAND WIRE	138
BUS D03	L	A08E2		1-02 *	H			2		P	HAND WIRE	138
BUS D03	L	A07E2		1-03 *	H			1		P	HAND WIRE	138
BUS D03	L	A06E2		1-04 *	H			2		P	HAND WIRE	138
BUS D03	L	A05E2		1-05 *				1			TO HERE	138
BUS D03	L	C04T2		1-06 *				2				138
BUS D03	L	F04L1		1-07 *				1				138
BUS D03	L	B03E2		1-08 *								138
BUS D03				1						43-6/8		138
BUS D04	L	A09E1		1-01 *	H			1		P	HAND WIRE	139
BUS D04	L	A08E1		1-02 *	H			2		P	HAND WIRE	139
BUS D04	L	A07E1		1-03 *	H			1		P	HAND WIRE	139
BUS D04	L	A06E1		1-04 *	H			2		P	HAND WIRE	139
BUS D04	L	A05E1		1-05 *				1			TO HERE	139
BUS D04	L	C04N2		1-06 *				2				139
BUS D04	L	F04N2		1-07 *				1				139
BUS D04	L	B03S1		1-08 *								139
BUS D04				1						42-4/8		139
BUS D05	L	A09F2		1-01 *	H			1		P	HAND WIRE	140
BUS D05	L	A08F2		1-02 *	H			2		P	HAND WIRE	140
BUS D05	L	A07F2		1-03 *	H			1		P	HAND WIRE	140
BUS D05	L	A06F2		1-04 *	H			2		P	HAND WIRE	140
BUS D05	L	A05F2		1-05 *				1			TO HERE	140
BUS D05	L	C04P2		1-06 *				2				140
BUS D05	L	F04F1		1-07 *				1				140
BUS D05	L	C03D2		1-08 *								140
BUS D05				1						40-0/8		140

RUN NAME	A/P	PIN NAME	ORDER PIN	BAY - ORDER	Q	DRAW RV PG Y	X	≠	REMARKS	LENGTH	EXCEPTIONS	RUN NUMBER
BUS D06	L	A09F1		1-01 *	H			1		P	HAND WIRE	141
BUS D06	L	A08F1		1-02 *	H			2		P	HAND WIRE	141
BUS D06	L	A07F1		1-03 *	H			1		P	HAND WIRE	141
BUS D06	L	A06F1		1-04 *	H			2		P	HAND WIRE	141
BUS D06	L	A05F1		1-05 *				1			TO HERE	141
BUS D06	L	C04V2		1-06 *				2				141
BUS D06	L	F04F2		1-07 *				1				141
BUS D06	L	C03C1		1-08 *								141
BUS D06				1						40-0/8		141
BUS D07	L	A09H2		1-01 *	H			1		P	HAND WIRE	142
BUS D07	L	A08H2		1-02 *	H			2		P	HAND WIRE	142
BUS D07	L	A07H2		1-03 *	H			1		P	HAND WIRE	142
BUS D07	L	A06H2		1-04 *	H			2		P	HAND WIRE	142
BUS D07	L	A05H2		1-05 *				1			TO HERE	142
BUS D07	L	C04M2		1-06 *				2				142
BUS D07	L	F04H1		1-07 *				1				142
BUS D07	L	B03V2		1-08 *								142
BUS D07				1						40-6/8		142
BUS D08	L	A09H1		1-01 *	H			1		P	HAND WIRE	143
BUS D08	L	A08H1		1-02 *	H			2		P	HAND WIRE	143
BUS D08	L	A07H1		1-03 *	H			1		P	HAND WIRE	143
BUS D08	L	A06H1		1-04 *	H			2		P	HAND WIRE	143
BUS D08	L	A05H1		1-05 *				1			TO HERE	143
BUS D08	L	C04L2		1-06 *				2				143
BUS D08	L	F04K1		1-07 *				1				143
BUS D08	L	C03R1		1-08 *								143
BUS D08				1						39-4/8		143
BUS D09	L	A09J2		1-01 *	H			1		P	HAND WIRE	144
BUS D09	L	A08J2		1-02 *	H			2		P	HAND WIRE	144
BUS D09	L	A07J2		1-03 *	H			1		P	HAND WIRE	144
BUS D09	L	A06J2		1-04 *	H			2		P	HAND WIRE	144
BUS D09	L	A05J2		1-05 *				1			TO HERE	144
BUS D09	L	C04K2		1-06 *				2				144
BUS D09	L	C03V1		1-07 *								144
BUS D09				1						22-6/8		144
BUS D10	L	A09J1		1-01 *	H			1		P	HAND WIRE	145
BUS D10	L	A08J1		1-02 *	H			2		P	HAND WIRE	145
BUS D10	L	A07J1		1-03 *	H			1		P	HAND WIRE	145
BUS D10	L	A06J1		1-04 *	H			2		P	HAND WIRE	145
BUS D10	L	A05J1		1-05 *				1			TO HERE	145
BUS D10	L	C04J2		1-06 *				2				145
BUS D10	L	C03S1		1-07 *								145
BUS D10				1						22-2/8		145

RUN NAME	A/P	PIN NAME	ORDER PIN	BAY - ORDER	Q	DRAW RV PG Y	X	±	REMARKS	LENGTH	EXCEPTIONS	RUN NUMBER
BUS D11	L	A09K2		1-01 *	H			1		P	HAND WIRE	146
BUS D11	L	A08K2		1-02 *	H			2		P	HAND WIRE	146
BUS D11	L	A07K2		1-03 *	H			1		P	HAND WIRE	146
BUS D11	L	A06K2		1-04 *	H			2		P	HAND WIRE	146
BUS D11	L	A05K2		1-05 *				1			TO HERE	146
BUS D11	L	C04H1		1-06 *				2				146
BUS D11	L	C03U1		1-07 *								146
BUS D11				1						22-4/8		146
BUS D12	L	A09K1		1-01 *	H			1		P	HAND WIRE	147
BUS D12	L	A08K1		1-02 *	H			2		P	HAND WIRE	147
BUS D12	L	A07K1		1-03 *	H			1		P	HAND WIRE	147
BUS D12	L	A06K1		1-04 *	H			2		P	HAND WIRE	147
BUS D12	L	A05K1		1-05 *				1			TO HERE	147
BUS D12	L	C04H2		1-06 *				2				147
BUS D12	L	D03R1		1-07 *								147
BUS D12				1						24-6/8		147
BUS D13	L	A09L2		1-01 *	H			2		P	HAND WIRE	148
BUS D13	L	A08L2		1-02 *	H			1		P	HAND WIRE	148
BUS D13	L	A07L2		1-03 *	H			2		P	HAND WIRE	148
BUS D13	L	A06L2		1-04 *	H			1		P	HAND WIRE	148
BUS D13	L	A05L2		1-05 *				2			TO HERE	148
BUS D13	L	C04F2		1-06 *				1				148
BUS D13	L	E03E1		1-07 *								148
BUS D13				1						26-0/8		148
BUS D14	L	A09L1		1-01 *	H			1		P	HAND WIRE	149
BUS D14	L	A08L1		1-02 *	H			2		P	HAND WIRE	149
BUS D14	L	A07L1		1-03 *	H			1		P	HAND WIRE	149
BUS D14	L	A06L1		1-04 *	H			2		P	HAND WIRE	149
BUS D14	L	A05L1		1-05 *				1			TO HERE	149
BUS D14	L	C04E2		1-06 *				2				149
BUS D14	L	D03U2		1-07 *								149
BUS D14				1						25-0/8		149
BUS D15	L	A09M2		1-01 *	H			2		P	HAND WIRE	150
BUS D15	L	A08M2		1-02 *	H			1		P	HAND WIRE	150
BUS D15	L	A07M2		1-03 *	H			2		P	HAND WIRE	150
BUS D15	L	A06M2		1-04 *	H			1		P	HAND WIRE	150
BUS D15	L	A05M2		1-05 *				2			TO HERE	150
BUS D15	L	C04D2		1-06 *				1				150
BUS D15	L	D03V1		1-07 *								150
BUS D15				1						25-2/8		150

RUN NAME	A/P	PIN NAME	ORDER PIN	BAY - ORDER	Q	DRAW RV PG Y	X	±	REMARKS	LENGTH	EXCEPTIONS	RUN NUMBER
BUS DC LO	L	B09F2		1-01 *	H			2		P	HAND WIRE	151
BUS DC LO	L	B08F2		1-02 *	H			1		P	HAND WIRE	151
BUS DC LO	L	B07F2		1-03 *	H			2		P	HAND WIRE	151
BUS DC LO	L	B06F2		1-04 *	H			1		P	HAND WIRE	151
BUS DC LO	L	B05F2		1-05 *				2			TO HERE	151
BUS DC LO	L	C04N1		1-06 *				1				151
BUS DC LO	L	F03D2		1-07 *								151
BUS DC LO				1						26-4/8		151
BUS INIT	L	A09A1		1-01 *	H			1		P	HAND WIRE	152
BUS INIT	L	A08A1		1-02 *	H			2		P	HAND WIRE	152
BUS INIT	L	A07A1		1-03 *	H			1		P	HAND WIRE	152
BUS INIT	L	A06A1		1-04 *	H			2		P	HAND WIRE	152
BUS INIT	L	A05A1		1-05 *				1			TO HERE	152
BUS INIT	L	D04L1		1-06 *				2				152
BUS INIT	L	A03D1		1-07 *								152
BUS INIT				1						34-0/8		152
BUS INTR	L	A09B1		1-01 *	H			1		P	HAND WIRE	153
BUS INTR	L	A08B1		1-02 *	H			2		P	HAND WIRE	153
BUS INTR	L	A07B1		1-03 *	H			1		P	HAND WIRE	153
BUS INTR	L	A06B1		1-04 *	H			2		P	HAND WIRE	153
BUS INTR	L	A05B1		1-05 *				1			TO HERE	153
BUS INTR	L	F04M1		1-06 *				2				153
BUS INTR	L	F03B1		1-07 *								153
BUS INTR				1						31-6/8		153
BUS MSYN	L	B01L2		1-01 *				2				154
BUS MSYN	L	B05V1		1-02 *	H			1		P	HAND WIRE	154
BUS MSYN	L	B06V1		1-03 *	H			2		P	HAND WIRE	154
BUS MSYN	L	B07V1		1-04 *	H			1		P	HAND WIRE	154
BUS MSYN	L	B08V1		1-05 *	H			2		P	HAND WIRE	154
BUS MSYN	L	B09V1		1-06 *				1			TO HERE	154
BUS MSYN	L	E04E1		1-07 *				2				154
BUS MSYN	L	D03P1		1-08 *								154
BUS MSYN				1						29-0/8		154
BUS NPG IN	H	A06U1		1-01 *	H			2		P	HAND WIRE	155
BUS NPG IN	H	A07U1		1-02 *	H			1		P	HAND WIRE	155
BUS NPG IN	H	A08U1		1-03 *	H			2		P	HAND WIRE	155
BUS NPG IN	H	A09U1		1-04 *				1			TO HERE	155
BUS NPG IN	H	D03L2		1-05 *								155
BUS NPG IN				1						18-6/8		155

RUN NAME	A/P	PIN NAME	ORDER PIN	BAY - ORDER	Q	DRAW	RV	PG	Y	X	#	REMARKS	LENGTH	EXCEPTIONS	RUN NUMBER
BUS NPG OUT		A05U1		1-01 *							2				156
BUS NPG OUT		C04B1		1-02 *							1				156
BUS NPG OUT		C04A1		1-03 *							2				156
BUS NPG OUT		F03N1		1-04 *											156
BUS NPG OUT				1									20-4/8		156
BUS NPR	L	A06S2		1-01 *	H						1		P	HAND WIRE	157
BUS NPR	L	A07S2		1-02 *	H						2		P	HAND WIRE	157
BUS NPR	L	A08S2		1-03 *	H						1		P	HAND WIRE	157
BUS NPR	L	A09S2		1-04 *							2			TO HERE	157
BUS NPR	L	F04J1		1-05 *							1				157
BUS NPR	L	F03F2		1-06 *											157
BUS NPR				1									26-6/8		157
BUS NPR I	L	A05S2		1-01 *							1				158
BUS NPR I	L	D03B2		1-02 *											158
BUS NPR I				1									9-0/8		158
BUS PA	L	A09M1		1-01 *	H						1		P	HAND WIRE	159
BUS PA	L	A08M1		1-02 *	H						2		P	HAND WIRE	159
BUS PA	L	A07M1		1-03 *	H						1		P	HAND WIRE	159
BUS PA	L	A06M1		1-04 *	H						2		P	HAND WIRE	159
BUS PA	L	A05M1		1-05 *							1			TO HERE	159
BUS PA	L	C04C1		1-06 *											159
BUS PA				1									17-6/8		159
BUS PB	L	A09N2		1-01 *	H						1		P	HAND WIRE	160
BUS PB	L	A08N2		1-02 *	H						2		P	HAND WIRE	160
BUS PB	L	A07N2		1-03 *	H						1		P	HAND WIRE	160
BUS PB	L	A06N2		1-04 *	H						2		P	HAND WIRE	160
BUS PB	L	A05N2		1-05 *							1			TO HERE	160
BUS PB	L	C04S1		1-06 *											160
BUS PB				1									19-2/8		160
BUS SACK	L	A09R2		1-01 *	H						1		P	HAND WIRE	161
BUS SACK	L	A08R2		1-02 *	H						2		P	HAND WIRE	161
BUS SACK	L	A07R2		1-03 *	H						1		P	HAND WIRE	161
BUS SACK	L	A06R2		1-04 *	H						2		P	HAND WIRE	161
BUS SACK	L	A05R2		1-05 *							1			TO HERE	161
BUS SACK	L	F04T2		1-06 *							2				161
BUS SACK	L	D03C1		1-07 *											161
BUS SACK				1									36-4/8		161

RUN NAME	A/P	PIN NAME	ORDER PIN	BAY - ORDER	Q	DRAW	RV	PG	Y	X	#	REMARKS	LENGTH	EXCEPTIONS	RUN NUMBER
BUS SSYN	L	B09U1		1-01 *	H						2		P	HAND WIRE	162
BUS SSYN	L	B08U1		1-02 *	H						1		P	HAND WIRE	162
BUS SSYN	L	B07U1		1-03 *	*						2		P	TO HERE	162
BUS SSYN	L	B06U1		1-04 *							1				162
BUS SSYN	L	B05U1		1-05 *							2				162
BUS SSYN	L	A03H1		1-06 *							1				162
BUS SSYN	L	B01A1		1-07 *							2				162
BUS SSYN	L	B01H1		1-08 *							1				162
BUS SSYN	L	E04J1		1-09 *							2				162
BUS SSYN	L	F04C1		1-10 *											162
BUS SSYN				1									41-0/8		162
CCL1 CHAR GEN DONE	H	A03L2		1-01 *							1				163
CCL1 CHAR GEN DONE	H	D02D2		1-02 *											163
CCL1 CHAR GEN DONE				1									9-6/8		163
CCL1 CHAR INTENSITY	H	A03M2		1-01 *							1				164
CCL1 CHAR INTENSITY	H	D02P1		1-02 *											164
CCL1 CHAR INTENSITY				1									11-0/8		164
CCL1 CHAR STOP L.P.	H	E02H1		1-01 *							1				165
CCL1 CHAR STOP L.P.	H	F03H2		1-02 *											165
CCL1 CHAR STOP L.P.				1									5-4/8		165
CCL2 BELL	H	A01S2		1-01 *							1				166
CCL2 BELL	H	D02F2		1-02 *											166
CCL2 BELL				1									9-4/8		166
CCL2 DESCENL (0)	H	C01F1		1-01 *							1				167
CCL2 DESCENC (0)	H	F02V1		1-02 *											167
CCL2 DESCENC (0)				1									12-0/8		167
CCL2 RAMP Y (1)	H	C01J1		1-01 *							1				168
CCL2 RAMP Y (1)	H	F02F1		1-02 *											168
CCL2 RAMP Y (1)				1									10-2/8		168
CCL2 RUN (0)	H	C01A1		1-01 *							1				169
CCL2 RUN (0)	H	F02F2		1-02 *											169
CCL2 RUN (0)				1									11-2/8		169
CCL2 STEP X	H	C01E1		1-01 *							1				170
CCL2 STEP X	H	D02N1		1-02 *											170
CCL2 STEP X				1									6-2/8		170
CLK	H	D06B1		1-01 *	H						1		P	HAND WIRE	171
CLK	H	D07B1		1-02 *										TO HERE	171
CLK				1									2-6/8		171

RUN NAME	A/P	PIN NAME	ORDER PIN	BAY - ORDER	Q	DRAW RV PG Y	X	±	REMARKS	LENGTH	6152 EXCEPTIONS	RUN NUMBER
CONA DATA STROBE	L	D08K1		1-01 *				1				172
CONA DATA STROBE	L	D09E2		1-02 *								172
CONA DATA STROBE				1						3-2/8		172
CONA ENAB ALU	H	D08E1		1-01 *				1				173
CONA ENAB ALU	H	F09D2		1-02 *								173
CONA ENAB ALU				1						7-6/8		173
CONA ENAB RCD PSW	H	D08N1		1-01 *				1				174
CONA ENAB RCD PSW	H	F09E1		1-02 *								174
CONA ENAB RCD PSW				1						7-0/8		174
CONA ENAB SWTCH REG	L	D08F1		1-01 *				1				175
CONA ENAB SWTCH REG	L	F09V1		1-02 *								175
CONA ENAB SWTCH REG				1						9-2/8		175
CONA ENAB XMIT PSW	H	D08A1		1-01 *				1				176
CONA ENAB XMIT PSW	H	F09D1		1-02 *								176
CONA ENAB XMIT PSW				1						8-2/8		176
CONA ENABLE DATA	H	C09N1		1-01 *				1				177
CONA ENABLE DATA	H	D08D1		1-02 *								177
CONA ENABLE DATA				1						4-2/8		177
CONA LOAD RCD PSW	H	D08R1		1-01 *				1				178
CONA LOAD RCD PSW	H	F09L2		1-02 *								178
CONA LOAD RCD PSW				1						7-4/8		178
CONA LOAD XMIT PSW	H	D08P1		1-01 *				1				179
CONA LOAD XMIT PSW	H	F09F1		1-02 *								179
CONA LOAD XMIT PSW				1						7-0/8		179
CONB INH *1	L	D08C1		1-01 *				1				180
CONB INH *1	L	F09K1		1-02 *								180
CONB INH *1				1						8-4/8		180
CONB IR CLOCK	H	E08C1		1-01 *				1				181
CONB IR CLOCK	H	E09V1		1-02 *								181
CONB IR CLOCK				1						4-4/8		181
CONB RUN LAMP	L	C09U1		1-01 *				1				182
CONB RUN LAMP	L	E08T2		1-02 *								182
CONB RUN LAMP				1						7-4/8		182
CONB SPA 00	H	C08U2		1-01 *				1				183
CONB SPA 00	H	C09D1		1-02 *								183
CONB SPA 00				1						4-2/8		183

RUN NAME	A/P	PIN NAME	ORDER PIN	BAY - ORDER	Q	DRAW RV PG Y	X	±	REMARKS	LENGTH	6152 EXCEPTIONS	RUN NUMBER
CONB SPA 01	H	C08T2		1-01 *				1				184
CONB SPA 01	H	C09C1		1-02 *								184
CONB SPA 01				1						4-0/8		184
CONB SPA 02	H	C08S2		1-01 *				1				185
CONB SPA 02	H	C09B1		1-02 *								185
CONB SPA 02				1						4-2/8		185
CONB SPA 03	H	C08R2		1-01 *				1				186
CONB SPA 03	H	C09A1		1-02 *								186
CONB SPA 03				1						4-0/8		186
CONC CLR MSYN	H	D08J1		1-01 *				1				187
CONC CLR MSYN	H	F09F2		1-02 *								187
CONC CLR MSYN				1						7-6/8		187
CONC DAT ENAB	L	D08M1		1-01 *				1				188
CONC DAT ENAB	L	F09V2		1-02 *								188
CONC DAT ENAB				1						8-6/8		188
COND INIT	H	D08U1		1-01 *				1				189
COND INIT	H	D09E1		1-02 *								189
COND INIT				1						4-0/8		189
CONE ALLOW CONSTANTS	L	C09E1		1-01 *				1				190
CONE ALLOW CONSTANTS	L	E08H1		1-02 *								190
CONE ALLOW CONSTANTS				1						8-0/8		190
CONE BUT DESTINATION	H	E09E1		1-01 *				1				191
CONE BUT DESTINATION	H	F08C1		1-02 *								191
CONE BUT DESTINATION				1						5-0/8		191
CONE BUT DESTINATION	L	D09H1		1-01 *				1				192
CONE BUT DESTINATION	L	E08J1		1-02 *								192
CONE BUT DESTINATION				1						5-2/8		192
CONE BUT IR DECODE	L	B01R2		1-01 *				1				193
CONE BUT IR DECODE	L	D09V2		1-02 *				2				193
CONE BUT IR DECODE	L	E08V2		1-03 *								193
CONE BUT IR DECODE				1						14-6/8		193
CONE ENAB UNARY	L	E08R2		1-01 *				1				194
CONE ENAB UNARY	L	E09N1		1-02 *								194
CONE ENAB UNARY				1						2-6/8		194

RUN NAME	A/P	PIN NAME	ORDER PIN	BAY - ORDER	Q	DRAW	RV	PG	Y	X	Z	REMARKS	LENGTH	EXCEPTIONS	RUN NUMBER
CONF JMP OR JSR	L	E08K2		1-01 *							1				195
CONF JMP OR JSR	L	E09M2		1-02 *											195
CONF JMP OR JSR				1									3-0/8		195
CONF RCD SER	L	F08A1		1-01 *							1				196
CONF RCD SER	L	F09P2		1-02 *											196
CONF RCD SER				1									4-2/8		196
CONF XMIT SER	L	F08B1		1-01 *							1				197
CONF XMIT SER	L	F09M2		1-02 *											197
CONF XMIT SER				1									3-6/8		197
CONF ALU MODE	H	D09R1		1-01 *							1				198
CONF ALU MODE	H	E08D2		1-02 *											198
CONF ALU MODE				1									3-6/8		198
CONF ALU S0	L	D09R2		1-01 *							1				199
CONF ALU S0	L	E08D1		1-02 *											199
CONF ALU S0				1									4-0/8		199
CONF ALU S1	L	D09P1		1-01 *							1				200
CONF ALU S1	L	E08E2		1-02 *											200
CONF ALU S1				1									4-0/8		200
CONF ALU S2	L	D09P2		1-01 *							1				201
CONF ALU S2	L	E08F2		1-02 *											201
CONF ALU S2				1									4-2/8		201
CONF ALU S3	L	D09N1		1-01 *							1				202
CONF ALU S3	L	E08E1		1-02 *											202
CONF ALU S3				1									4-2/8		202
CONF AUX BYTE	H	D09N2		1-01 *							1				203
CONF AUX BYTE	H	E08U2		1-02 *											203
CONF AUX BYTE				1									5-6/8		203
CONF AUX CONTROL	L	E08S2		1-01 *							1				204
CONF AUX CONTROL	L	F09B1		1-02 *											204
CONF AUX CONTROL				1									3-6/8		204
CONF CIN	H	E08S1		1-01 *							1				205
CONF CIN	H	E09T2		1-02 *											205
CONF CIN				1									4-4/8		205

RUN NAME	A/P	PIN NAME	ORDER PIN	BAY - ORDER	Q	DRAW	RV	PG	Y	X	Z	REMARKS	LENGTH	EXCEPTIONS	RUN NUMBER
CONF MPC 00	L	B01P2		1-01 *							1				206
CONF MPC 00	L	E09L1		1-02 *							2				206
CONF MPC 00	L	F08P2		1-03 *											206
CONF MPC 00				1									17-0/8		206
CONF MPC 01	L	B01V1		1-01 *							1				207
CONF MPC 01	L	E09P1		1-02 *							2				207
CONF MPC 01	L	F08N2		1-03 *											207
CONF MPC 01				1									16-0/8		207
CONF MPC 02	L	B01N1		1-01 *							1				208
CONF MPC 02	L	E09R1		1-02 *							2				208
CONF MPC 02	L	F08M1		1-03 *											208
CONF MPC 02				1									17-0/8		208
CONF MPC 03	L	B01K2		1-01 *							1				209
CONF MPC 03	L	E09D1		1-02 *							2				209
CONF MPC 03	L	F08K1		1-03 *											209
CONF MPC 03				1									17-0/8		209
CONF MPC 04	L	B01U2		1-01 *							1				210
CONF MPC 04	L	E09C1		1-02 *							2				210
CONF MPC 04	L	F08J2		1-03 *											210
CONF MPC 04				1									15-6/8		210
CONF MPC 05	L	B01T2		1-01 *							1				211
CONF MPC 05	L	E09B1		1-02 *							2				211
CONF MPC 05	L	F08N1		1-03 *											211
CONF MPC 05				1									16-4/8		211
CONF MPC 06	L	B01C1		1-01 *							1				212
CONF MPC 06	L	E09A1		1-02 *							2				212
CONF MPC 06	L	F08L1		1-03 *											212
CONF MPC 06				1									18-0/8		212
CONF MPC 07	L	B01J1		1-01 *							1				213
CONF MPC 07	L	E09S1		1-02 *							2				213
CONF MPC 07	L	F08M2		1-03 *											213
CONF MPC 07				1									17-2/8		213
CONF SPARE	L	E08A1												1-PIN RUN	214
CONG BBOT	H	D08S1		1-01 *							1				215
CONG BBOT	H	F09A1		1-02 *											215
CONG BBOT				1									6-0/8		215

RUN NAME	A/P	PIN NAME	ORDER PIN	BAY - ORDER	Q	DRAW RV PG Y	X	±	REMARKS	LENGTH	EXCEPTIONS	RUN NUMBER
CONG BMODE 00	H	C09V1		1-01 *				1				216
CONG BMODE 00	H	E08M2		1-02 *								216
CONG BMODE 00				1						7-0/8		216
CONG BMODE 01	H	D09A1		1-01 *				1				217
CONG BMODE 01	H	E08M1		1-02 *								217
CONG BMODE 01				1						6-2/8		217
CONG BSTOP	H	C09L2		1-01 *				1				218
CONG BSTOP	H	E08H2		1-02 *								218
CONG BSTOP				1						7-4/8		218
CONG CKOFF	L	E08R1		1-01 *				1				219
CONG CKOFF	L	F09J1		1-02 *								219
CONG CKOFF				1						4-4/8		219
CONG ENAB PSW	H	C09R2		1-01 *				1				220
CONG ENAB PSW	H	E08K1		1-02 *								220
CONG ENAB PSW				1						7-2/8		220
CONG ENAB SPL	L	C09F2		1-01 *				1				221
CONG ENAB SPL	L	E08N2		1-02 *								221
CONG ENAB SPL				1						8-4/8		221
CONG ENAB SPR	L	C09E2		1-01 *				1				222
CONG ENAB SPR	L	E08L1		1-02 *								222
CONG ENAB SPR				1						8-4/8		222
CONG LOAD PSW	L	D08H2		1-01 *				1				223
CONG LOAD PSW	L	D09M2		1-02 *								223
CONG LOAD PSW				1						3-0/8		223
CONG ROM ALEG 00	L	E08P2		1-01 *				1				224
CONG ROM ALEG 00	L	E09U1		1-02 *								224
CONG ROM ALEG 00				1						3-0/8		224
CONG SP WRITE	H	E08F1		1-01 *				1				225
CONG SP WRITE	H	F09C1		1-02 *								225
CONG SP WRITE				1						5-0/8		225
CONH PROC INIT	H	D09M1		1-01 *				1				226
CONH PROC INIT	H	F08T2		1-02 *								226
CONH PROC INIT				1						8-2/8		226
CONH PROC INIT	L	D09L2		1-01 *				1				227
CONH PROC INIT	L	F08S1		1-02 *								227
CONH PROC INIT				1						8-4/8		227

RUN NAME	A/P	PIN NAME	ORDER PIN	BAY - ORDER	Q	DRAW RV PG Y	X	±	REMARKS	LENGTH	EXCEPTIONS	RUN NUMBER
CONJ MAN CLK	L	B01V2		1-01 *				1				228
CONJ MAN CLK	L	F08V1		1-02 *								228
CONJ MAN CLK				1						14-2/8		228
CONJ PROC CLOCK	H	C08N1		1-01 *				1				229
CONJ PROC CLOCK	H	D09L1		1-02 *								229
CONJ PROC CLOCK				1						5-0/8		229
CONJ S CLK ON	L	B01U1		1-01 *				1				230
CONJ S CLK ON	L	F08U2		1-02 *								230
CONJ S CLK ON				1						14-4/8		230
CONJ UNG PROC CLOCK	H	D08V1		1-01 *				1				231
CONJ UNG PROC CLOCK	H	F09L1		1-02 *								231
CONJ UNG PROC CLOCK				1						6-6/8		231
CONSOLE CONT	L	C09S2		1-01 *				1				232
CONSOLE CONT	L	F08H2		1-02 *								232
CONSOLE CONT				1						9-4/8		232
CONSOLE DEP	L	C09M1		1-01 *				1				233
CONSOLE DEP	L	F08D2		1-02 *								233
CONSOLE DEP				1						9-4/8		233
CONSOLE EXAM	L	C09T2		1-01 *				1				234
CONSOLE EXAM	L	F08F2		1-02 *								234
CONSOLE EXAM				1						9-2/8		234
CONSOLE LOAD	L	C09U2		1-01 *				1				235
CONSOLE LOAD	L	F08J1		1-02 *								235
CONSOLE LOAD				1						9-4/8		235
CONSOLE START	L	C09M2		1-01 *				1				236
CONSOLE START	L	F08E2		1-02 *								236
CONSOLE START				1						9-6/8		236
CONSOLE STOP	L	C09S1		1-01 *				1				237
CONSOLE STOP	L	F08H1		1-02 *								237
CONSOLE STOP				1						9-4/8		237
CR1		C04R1									1-PIN RUN	238
CSC CHARACTER,CR-	H	C02J2		1-01 *				1				239
CSC CHARACTER,CR-	H	E03S2		1-02 *								239
CSC CHARACTER,CR-				1						8-6/8		239

RUN NAME	A/P	PIN NAME	ORDER PIN	BAY - ORDER	Q	DRAW	RV	PG	Y	X	#	REMARKS	LENGTH	6152 EXCEPTIONS	RUN NUMBER
CSC CLR X	H	D01K2		1-01 *							1				240
CSC CLR X	H	F03J1		1-02 *							2				240
CSC CLR X	H	F02U2		1-03 *											240
CSC CLR X				1									11-4/8		240
CSC CLR X	L	D01D1		1-01 *							1				241
CSC CLR X	L	F02T2		1-02 *											241
CSC CLR X				1									9-4/8		241
CSC CNTRL CHAR DONE	H	D03D1		1-01 *							1				242
CSC CNTRL CHAR DONE	H	E02M2		1-02 *											242
CSC CNTRL CHAR DONE				1									6-0/8		242
CSC CR,SI	L	A02S1		1-01 *							1				243
CSC CR,SI	L	E03D2		1-02 *											243
CSC CR,SI				1									11-6/8		243
CSC L,F,	H	E02P1		1-01 *							1				244
CSC L,F,	H	F03U2		1-02 *											244
CSC L,F,				1									6-0/8		244
CSC SHIFT INTR	L	D03A1		1-01 *							1				245
CSC SHIFT INTR	L	F02H2		1-02 *											245
CSC SHIFT INTR				1									8-4/8		245
DCR 0-3 (0)	H	C03J2		1-01 *							1				246
DCR 0-3 (0)	H	E01B1		1-02 *											246
DCR 0-3 (0)				1									7-4/8		246
DCR 4-7 (0)	H	C03K2		1-01 *							1				247
DCR 4-7 (0)	H	E01C1		1-02 *											247
DCR 4-7 (0)				1									7-4/8		247
DCR 8,9 (0)	H	C03N1		1-01 *							1				248
DCR 8,9 (0)	H	E01E1		1-02 *											248
DCR 8,9 (0)				1									7-2/8		248
DCR DIS 00 IN	H	D01M1		1-01 *							1				249
DCR DIS 00 IN	H	F01H1		1-02 *											249
DCR DIS 00 IN				1									7-0/8		249
DCR01 OUT	H	F01F1		1-01 *							1				250
DCR01 OUT	H	F03S2		1-02 *											250
DCR01 OUT				1									4-0/8		250

RUN NAME	A/P	PIN NAME	ORDER PIN	BAY - ORDER	Q	DRAW	RV	PG	Y	X	#	REMARKS	LENGTH	6152 EXCEPTIONS	RUN NUMBER
DCR02 OUT	H	F01V2		1-01 *							1				251
DCR02 OUT	H	F03T2		1-02 *											251
DCR02 OUT				1									3-4/8		251
DCR03 OUT	H	F01U2		1-01 *							1				252
DCR03 OUT	H	F03N2		1-02 *											252
DCR03 OUT				1									3-6/8		252
DCR04 OUT	H	F01C1		1-01 *							1				253
DCR04 OUT	H	F03P2		1-02 *											253
DCR04 OUT				1									4-2/8		253
DCR05 OUT	H	E01K1		1-01 *							1				254
DCR05 OUT	H	F01B1		1-02 *											254
DCR05 OUT				1									4-2/8		254
DPA AMUX 00	H	B01D1		1-01 *							1				255
DPA AMUX 00	H	C08K2		1-02 *							2				255
DPA AMUX 00	H	C09N2		1-03 *											255
DPA AMUX 00				1									10-4/8		255
DPA AMUX 01	H	B01F1		1-01 *							1				256
DPA AMUX 01	H	C08B1		1-02 *							2				256
DPA AMUX 01	H	C09P1		1-03 *											256
DPA AMUX 01				1									10-6/8		256
DPA AMUX 02	H	B01L1		1-01 *							1				257
DPA AMUX 02	H	C08C1		1-02 *							2				257
DPA AMUX 02	H	C09P2		1-03 *											257
DPA AMUX 02				1									10-4/8		257
DPA AMUX 03	H	B01P1		1-01 *							1				258
DPA AMUX 03	H	C08H2		1-02 *							2				258
DPA AMUX 03	H	C09R1		1-03 *											258
DPA AMUX 03				1									10-2/8		258
DPB AMUX 04	H	B01M1		1-01 *							1				259
DPB AMUX 04	H	C08D1		1-02 *							2				259
DPB AMUX 04	H	D09J2		1-03 *											259
DPB AMUX 04				1									12-6/8		259
DPB AMUX 05	H	B01S2		1-01 *							1				260
DPB AMUX 05	H	C08D2		1-02 *							2				260
DPB AMUX 05	H	D09K2		1-03 *											260
DPB AMUX 05				1									12-4/8		260

RUN NAME	A/P	PIN NAME	ORDER PIN	BAY - ORDER	Q	DRAW	RV	PG	Y	X	#	REMARKS	LENGTH	EXCEPTIONS	RUN NUMBER
DPB AMUX 06	H	B01K1		1-01 *							1				261
DPB AMUX 06	H	C08E1		1-02 *							2				261
DPB AMUX 06	H	D09J1		1-03 *											261
DPB AMUX 06				1									12-4/8		261
DPB AMUX 07	H	B01R1		1-01 *							1				262
DPB AMUX 07	H	C08F1		1-02 *							2				262
DPB AMUX 07	H	D09K1		1-03 *											262
DPB AMUX 07				1									12-2/8		262
DPC 8-15-0	H	D08B1		1-01 *							1				263
DPC 8-15-0	H	D09B1		1-02 *											263
DPC 8-15-0				1									2-6/8		263
DPC AMUX 08	H	B01E1		1-01 *							1				264
DPC AMUX 08	H	C08L2		1-02 *							2				264
DPC AMUX 08	H	C09J2		1-03 *											264
DPC AMUX 08				1									10-4/8		264
DPC AMUX 09	H	B01F2		1-01 *							1				265
DPC AMUX 09	H	C08P2		1-02 *							2				265
DPC AMUX 09	H	C09K1		1-03 *											265
DPC AMUX 09				1									10-2/8		265
DPC AMUX 10	H	B01M2		1-01 *							1				266
DPC AMUX 10	H	C08M2		1-02 *							2				266
DPC AMUX 10	H	C09K2		1-03 *											266
DPC AMUX 10				1									10-0/8		266
DPC AMUX 11	H	B01S1		1-01 *							1				267
DPC AMUX 11	H	C08A1		1-02 *							2				267
DPC AMUX 11	H	C09L1		1-03 *											267
DPC AMUX 11				1									10-0/8		267
DPD AMUX 12	H	B01J2		1-01 *							2				268
DPD AMUX 12	H	C08E2		1-02 *							1				268
DPD AMUX 12	H	C09F1		1-03 *											268
DPD AMUX 12				1									9-4/8		268
DPD AMUX 13	H	B01H2		1-01 *							2				269
DPD AMUX 13	H	C08J2		1-02 *							1				269
DPD AMUX 13	H	C09H1		1-03 *											269
DPD AMUX 13				1									9-4/8		269

RUN NAME	A/P	PIN NAME	ORDER PIN	BAY - ORDER	Q	DRAW	RV	PG	Y	X	#	REMARKS	LENGTH	EXCEPTIONS	RUN NUMBER
DPD AMUX 14	H	B01D2		1-01 *							2				270
DPD AMUX 14	H	C08F2		1-02 *							1				270
DPD AMUX 14	H	C09H2		1-03 *											270
DPD AMUX 14				1									9-6/8		270
DPD AMUX 15	H	B01N2		1-01 *							1				271
DPD AMUX 15	H	C08N2		1-02 *							2				271
DPD AMUX 15	H	C09J1		1-03 *											271
DPD AMUX 15				1									10-0/8		271
DPE PSW 05(0)	H	C08V1		1-01 *							1				272
DPE PSW 05(0)	H	D09D2		1-02 *											272
DPE PSW 05(0)				1									3-6/8		272
DPE PSW 06(0)	H	C08S1		1-01 *							1				273
DPE PSW 06(0)	H	D09C1		1-02 *											273
DPE PSW 06(0)				1									3-6/8		273
DPE PSW 07(0)	H	C08R1		1-01 *							1				274
DPE PSW 07(0)	H	D09D1		1-02 *											274
DPE PSW 07(0)				1									4-0/8		274
DPE T DEL(0)	H	F08S2		1-01 *							1				275
DPE T DEL(0)	H	F09S2		1-02 *											275
DPE T DEL(0)				1									2-6/8		275
DPF IR 00(1)	H	C08H1		1-01 *							1				276
DPF IR 00(1)	H	D09U2		1-02 *											276
DPF IR 00(1)				1									6-6/8		276
DPF IR 01(1)	H	C08L1		1-01 *							1				277
DPF IR 01(1)	H	D09T2		1-02 *											277
DPF IR 01(1)				1									6-2/8		277
DPF IR 02(1)	H	C08P1		1-01 *							1				278
DPF IR 02(1)	H	D09U1		1-02 *											278
DPF IR 02(1)				1									5-6/8		278
DPF IR 06(1)	H	C08V2		1-01 *							1				279
DPF IR 06(1)	H	D09S1		1-02 *											279
DPF IR 06(1)				1									4-6/8		279
DPF IR 07(1)	H	C08K1		1-01 *							1				280
DPF IR 07(1)	H	D09S2		1-02 *											280
DPF IR 07(1)				1									6-2/8		280

RUN NAME	A/P	PIN NAME	ORDER PIN	BAY - ORDER	Q	DRAW RV PG Y	X	≠	REMARKS	LENGTH	EXCEPTIONS	RUN NUMBER
DPF IR Ø9(1)	H	C08M1		1-01 *				1				281
DPF IR Ø9(1)	H	E09F1		1-02 *								281
DPF IR Ø9(1)				1						7-2/8		281
DPF ROTATE	H	E08N1		1-01 *				1				282
DPF ROTATE	H	F09S1		1-02 *								282
DPF ROTATE				1						5-6/8		282
DPG BYTE	L	D08L1		1-01 *				1				283
DPG BYTE	L	E09K1		1-02 *								283
DPG BYTE				1						5-Ø/8		283
DPG CAL DEST	L	E08U1		1-01 *				1				284
DPG CAL DEST	L	E09M1		1-02 *								284
DPG CAL DEST				1						3-2/8		284
DPG DIS ALU S BITS	H	E08J2		1-01 *				1				285
DPG DIS ALU S BITS	H	E09J1		1-02 *								285
DPG DIS ALU S BITS				1						2-4/8		285
DPG EMT	L	F08E1		1-01 *				1				286
DPG EMT	L	F09U2		1-02 *								286
DPG EMT				1						4-2/8		286
DPG ENAB NON MOD	H	E08L2		1-01 *				1				287
DPG ENAB NON MOD	H	F09T2		1-02 *								287
DPG ENAB NON MOD				1						6-Ø/8		287
DPG JMP OR JSR	L	D08H1		1-01 *				1				288
DPG JMP OR JSR	L	E09E2		1-02 *								288
DPG JMP OR JSR				1						5-Ø/8		288
DPG MOVE	L	E09H1		1-01 *				1				289
DPG MOVE	L	F08K2		1-02 *								289
DPG MOVE				1						5-4/8		289
DPG RCD INT	L	F08R2		1-01 *				1				290
DPG RCD INT	L	F09R2		1-02 *								290
DPG RCD INT				1						2-6/8		290
DPG RTS	L	E09S2		1-01 *				1				291
DPG RTS	L	F08F1		1-02 *								291
DPG RTS				1						4-2/8		291
DPG TRAP	L	F08D1		1-01 *				1				292
DPG TRAP	L	F09U1		1-02 *								292
DPG TRAP				1						4-2/8		292

RUN NAME	A/P	PIN NAME	ORDER PIN	BAY - ORDER	Q	DRAW RV PG Y	X	≠	REMARKS	LENGTH	EXCEPTIONS	RUN NUMBER
DPG WAIT	L	D09V1		1-01 *				1				293
DPG WAIT	L	F08R1		1-02 *								293
DPG WAIT				1						7-2/8		293
DPH BUR ENB	L	F09K2									1-PIN RUN	294
DPH BE -15	L	F09R1									1-PIN RUN	295
DPH SØ -15	L	F09J2									1-PIN RUN	296
DPH SER Ø	H	D09F1									1-PIN RUN	297
DPH SER Ø	L	F09E2									1-PIN RUN	298
DPH SER IN	L	F09N1									1-PIN RUN	299
DPH SI -15	L	F09P1									1-PIN RUN	300
DPH XMIT INT	L	F08P1		1-01 *				1				301
DPH XMIT INT	L	F09N2		1-02 *								301
DPH XMIT INT				1						3-2/8		301
F04E1		F04E1		1-01 *				1				302
F04E1		F04V2		1-02 *								302
F04E1				1						4-2/8		302
F04L2		F04L2		1-01 *				1				303
F04L2		F04R1		1-02 *								303
F04L2				1						3-Ø/8		303
F04M2		F04M2		1-01 *				1				304
F04M2		F04S1		1-02 *								304
F04M2				1						3-Ø/8		304
F04P2		F04P2		1-01 *				1				305
F04P2		F04S2		1-02 *								305
F04P2				1						2-4/8		305
F04R2		F04D2		1-01 *				2				306
F04R2		F04R2		1-02 *				1				306
F04R2		F04N1		1-03 *								306
F04R2				1						6-2/8		306
F05A1		F05A1		1-01 *	H			1	P		HAND WIRE	307
F05A1		F06A1		1-02 *							TO HERE	307
F05A1				1						2-6/8		307

RUN NAME	A/P	PIN NAME	ORDER PIN	BAY - ORDER	Q	DRAW RV PG Y	X	≠	REMARKS	LENGTH	EXCEPTIONS	RUN NUMBER
F05B1		F05B1		1-01 *	H			1		P	HAND WIRE	308
F05B1		F06B1		1-02 *							TO HERE	308
F05B1				1						2-6/8		308
F05U1		F05U1		1-01 *	H			1		P	HAND WIRE	309
F05U1		F06U1		1-02 *							TO HERE	309
F05U1				1						2-6/8		309
F05V1		F05V1		1-01 *	H			1		P	HAND WIRE	310
F05V1		F06V1		1-02 *							TO HERE	310
F05V1				1						2-6/8		310
FS CLK	L	F09H1									1-PIN RUN	311
FS CLK DISAB	L	F09H2									1-PIN RUN	312
FS SER IN	L	F09M1									1-PIN RUN	313
GM INT 00	L	A01L2		1-01 *				1				314
GM INT 00	L	B02U1		1-02 *								314
GM INT 00				1						6-0/8		314
GM INT 01	L	A01M2		1-01 *				1				315
GM INT 01	L	C02C1		1-02 *								315
GM INT 01				1						6-6/8		315
GM INT 02	L	A01R2		1-01 *				1				316
GM INT 02	L	B02P1		1-02 *								316
GM INT 02				1						5-0/8		316
GM INTENSITY OUT	L	A01T2		1-01 *	H			1	TWISTED PAIR		HAND WIRE	317
GM INTENSITY OUT	L	B02L2		1-02 *	H						H TO WHERE	317
GM INTENSITY OUT				1						4-4/8		317
GM INTERRUPT	H	A02P1		1-01 *				1				318
GM INTERRUPT	H	D03H1		1-02 *								318
GM INTERRUPT				1						9-6/8		318
GM L.P.INTERPT ENA (0)	H	C02M1		1-01 *				1				319
GM L.P.INTERPT ENA (0)	H	F03M1		1-02 *								319
GM L.P.INTERPT ENA (0)				1						10-4/8		319

RUN NAME	A/P	PIN NAME	ORDER PIN	BAY - ORDER	Q	DRAW RV PG Y	X	≠	REMARKS	LENGTH	EXCEPTIONS	RUN NUMBER
GND 01-03		A01C1		1-01 *	H			2		P	HAND WIRE	320
GND 01-03		A01T1		1-02 *	H			1		P	HAND WIRE	320
GND 01-03		A01C2		1-03 *	H			2		P	HAND WIRE	320
GND 01-03		A03C2	A02C2	1-04 *	H			1		P	HAND WIRE	320
GND 01-03		A02C2		1-05 *	H			2	24 AWG		HAND WIRE	320
GND 01-03		A03E2		1-06 *	H			1	24AWG		HAND WIRE	320
GND 01-03		C03B2		1-07 *	H			2	24AWG		HAND WIRE	320
GND 01-03		C03N2	A03T1	1-08 *	H			1	24AWG		HAND WIRE	320
GND 01-03		A03T1	B03B2	1-09 *	H			2	24 AWG		HAND WIRE	320
GND 01-03		B03B2		1-10 *	H			1		P	HAND WIRE	320
GND 01-03		B03C2		1-11 *	H			2		P	HAND WIRE	320
GND 01-03		B02C2		1-12 *	H			1		P	HAND WIRE	320
GND 01-03		B01C2		1-13 *	H			2		P	HAND WIRE	320
GND 01-03		A02T1		1-14 *	H			1		P	HAND WIRE	320
GND 01-03		B02T1		1-15 *	H			2		P	HAND WIRE	320
GND 01-03		B01T1		1-16 *	H			1		P	HAND WIRE	320
GND 01-03		B03T1		1-17 *	H			2		P	HAND WIRE	320
GND 01-03		C03C2		1-18 *	H			1		P	HAND WIRE	320
GND 01-03		C02C2		1-19 *	H			2		P	HAND WIRE	320
GND 01-03		C01C2		1-20 *	H			1		P	HAND WIRE	320
GND 01-03		C01T1		1-21 *	H			2		P	HAND WIRE	320
GND 01-03		C02T1		1-22 *	H			1		P	HAND WIRE	320
GND 01-03		C03T1		1-23 *	H			2		P	HAND WIRE	320
GND 01-03		D03C2		1-24 *	H			1		P	HAND WIRE	320
GND 01-03		D02C2		1-25 *	H			2		P	HAND WIRE	320
GND 01-03		D01C2		1-26 *	H			1		P	HAND WIRE	320
GND 01-03		D01T1		1-27 *	H			2		P	HAND WIRE	320
GND 01-03		D02T1		1-28 *	H			1		P	HAND WIRE	320
GND 01-03		D03T1		1-29 *	H			2		P	HAND WIRE	320
GND 01-03		E03T1		1-30 *	H			1		P	HAND WIRE	320
GND 01-03		E02T1		1-31 *	H			2		P	HAND WIRE	320
GND 01-03		E01T1		1-32 *	H			1		P	HAND WIRE	320
GND 01-03		F01C2		1-33 *	H			2		P	HAND WIRE	320
GND 01-03		F02C2		1-34 *	H			1		P	HAND WIRE	320
GND 01-03		F03C2		1-35 *	H			2		P	HAND WIRE	320
GND 01-03		F03T1		1-36 *	H			1		P	HAND WIRE	320
GND 01-03		F02T1		1-37 *	H			2		P	HAND WIRE	320
GND 01-03		F01T1		1-38 *	H			1		P	HAND WIRE	320
GND 01-03		E01C2		1-39 *	H			2		P	HAND WIRE	320
GND 01-03		E02C2		1-40 *	H			1		P	HAND WIRE	320
GND 01-03		E03C2		1-41 *	H			2		P	HAND WIRE	320
GND 01-03		E04A1		1-42 *	H			1		P	HAND WIRE	320
GND 01-03		E04C2		1-43 *	H			2		P	HAND WIRE	320
GND 01-03		F04T1		1-44 *	H					P	H TO WHERE	320
GND 01-03				1						151-2/8		320

RUN NAME	A/P	PIN NAME	ORDER PIN	BAY - ORDER	Q	DRAW	RV	PG	Y	X	#	REMARKS	LENGTH	EXCEPTIONS	RUN NUMBER
GND 04-06		A06B2		1-01 *	H						2		P	HAND WIRE	321
GND 04-06		A06C2		1-02 *	H						1		P	HAND WIRE	321
GND 04-06		A05B2		1-03 *	H						2		P	HAND WIRE	321
GND 04-06		A05C2		1-04 *	H						1		P	HAND WIRE	321
GND 04-06		A04C2		1-05 *	H						2		P	HAND WIRE	321
GND 04-06		A05T1		1-06 *	H						1		P	HAND WIRE	321
GND 04-06		A05S1		1-07 *	H						2		P	HAND WIRE	321
GND 04-06		A05R1		1-08 *	H						1		P	HAND WIRE	321
GND 04-06		A05P1		1-09 *	H						2		P	HAND WIRE	321
GND 04-06		A05N1		1-10 *	H						1		P	HAND WIRE	321
GND 04-06		A06P1		1-11 *	H						2		P	HAND WIRE	321
GND 04-06		A06N1		1-12 *	H						1		P	HAND WIRE	321
GND 04-06		A06R1		1-13 *	H						2		P	HAND WIRE	321
GND 04-06		A06S1		1-14 *	H						1		P	HAND WIRE	321
GND 04-06		A06V2		1-15 *	H						2		P	HAND WIRE	321
GND 04-06		A06T1		1-16 *	H						1		P	HAND WIRE	321
GND 04-06		A05V2		1-17 *	H						2		P	HAND WIRE	321
GND 04-06		B05B2		1-18 *	H						1		P	HAND WIRE	321
GND 04-06		B05C2		1-19 *	H						2		P	HAND WIRE	321
GND 04-06		B04C2		1-20 *	H						1		P	HAND WIRE	321
GND 04-06		B05E1		1-21 *	H						2		P	HAND WIRE	321
GND 04-06		B05D1		1-22 *	H						1		P	HAND WIRE	321
GND 04-06		B06E1		1-23 *	H						2		P	HAND WIRE	321
GND 04-06		B06D1		1-24 *	H						1		P	HAND WIRE	321
GND 04-06		B06C2		1-25 *	H						2		P	HAND WIRE	321
GND 04-06		B06B2		1-26 *	H						1		P	HAND WIRE	321
GND 04-06		B06V2		1-27 *	H						2		P	HAND WIRE	321
GND 04-06		B06T1		1-28 *	H						1		P	HAND WIRE	321
GND 04-06		B05V2		1-29 *	H						2		P	HAND WIRE	321
GND 04-06		B05T1		1-30 *	H						1		P	HAND WIRE	321
GND 04-06		B04T1		1-31 *	H						2		P	HAND WIRE	321
GND 04-06		C04C2		1-32 *	H						1		P	HAND WIRE	321
GND 04-06		C05C2		1-33 *	H						2		P	HAND WIRE	321
GND 04-06		C06C2		1-34 *	H						1		P	HAND WIRE	321
GND 04-06		C06T1		1-35 *	H						2		P	HAND WIRE	321
GND 04-06		C05T1		1-36 *	H						1		P	HAND WIRE	321
GND 04-06		C04T1		1-37 *	H						2		P	HAND WIRE	321
GND 04-06		D04C2		1-38 *	H						1		P	HAND WIRE	321
GND 04-06		D05C2		1-39 *	H						2		P	HAND WIRE	321
GND 04-06		D06C2		1-40 *	H						1		P	HAND WIRE	321
GND 04-06		D06T1		1-41 *	H						2		P	HAND WIRE	321
GND 04-06		D05T1		1-42 *	H						1		P	HAND WIRE	321
GND 04-06		D04T1		1-43 *	H						2		P	HAND WIRE	321
GND 04-06		E05C2		1-44 *	H						1		P	HAND WIRE	321
GND 04-06		E06C2		1-45 *	H						2		P	HAND WIRE	321
GND 04-06		E06T1		1-46 *	H						1		P	HAND WIRE	321
GND 04-06		E05T1		1-47 *	H						2		P	HAND WIRE	321
GND 04-06		E04T1		1-48 *	H						1		P	HAND WIRE	321
GND 04-06		F04C2		1-49 *	H						2		P	HAND WIRE	321
GND 04-06		F05C2		1-50 *	H						1		P	HAND WIRE	321
GND 04-06		F06C2		1-51 *	H						2		P	HAND WIRE	321
GND 04-06		F04J2		1-52 *	H						1		P	HAND WIRE	321
GND 04-06		F05T1		1-53 *	H						2		P	HAND WIRE	321
GND 04-06		F06T1		1-54 *	H								P	H TO WHERE	321
GND 04-06				1									153-6/8		321

RUN NAME	A/P	PIN NAME	ORDER PIN	BAY - ORDER	Q	DRAW	RV	PG	Y	X	#	REMARKS	LENGTH	EXCEPTIONS	RUN NUMBER
GND 07-09		A09B2		1-01 *	H						1		P	HAND WIRE	322
GND 07-09		A09C2		1-02 *	H						2		P	HAND WIRE	322
GND 07-09		A08B2		1-03 *	H						1		P	HAND WIRE	322
GND 07-09		A08C2		1-04 *	H						2		P	HAND WIRE	322
GND 07-09		A07B2		1-05 *	*						1		P	TO HERE	322
GND 07-09		A07C2		1-06 *	H						2		P	HAND WIRE	322
GND 07-09		A07N1		1-07 *	H						1		P	HAND WIRE	322
GND 07-09		A07P1		1-08 *	H						2		P	HAND WIRE	322
GND 07-09		A07R1		1-09 *	H						1		P	HAND WIRE	322
GND 07-09		A07S1		1-10 *	H						2		P	HAND WIRE	322
GND 07-09		A07T1		1-11 *	H						1		P	HAND WIRE	322
GND 07-09		A07V2		1-12 *	H						2		P	HAND WIRE	322
GND 07-09		A08T1		1-13 *	H						1		P	HAND WIRE	322
GND 07-09		A08S1		1-14 *	H						2		P	HAND WIRE	322
GND 07-09		A08R1		1-15 *	H						1		P	HAND WIRE	322
GND 07-09		A08P1		1-16 *	H						2		P	HAND WIRE	322
GND 07-09		A08N1		1-17 *	H						1		P	HAND WIRE	322
GND 07-09		A09P1		1-18 *	H						2		P	HAND WIRE	322
GND 07-09		A09N1		1-19 *	H						1		P	HAND WIRE	322
GND 07-09		A09R1		1-20 *	H						2		P	HAND WIRE	322
GND 07-09		A09S1		1-21 *	H						1		P	HAND WIRE	322
GND 07-09		A09V2		1-22 *	H						2		P	HAND WIRE	322
GND 07-09		A09T1		1-23 *	H						1		P	HAND WIRE	322
GND 07-09		A08V2		1-24 *	H						2		P	HAND WIRE	322
GND 07-09		B08B2		1-25 *	H						1		P	HAND WIRE	322
GND 07-09		B08C2		1-26 *	H						2		P	HAND WIRE	322
GND 07-09		B07B2		1-27 *	H						1		P	HAND WIRE	322
GND 07-09		B07E1		1-28 *	H						2		P	HAND WIRE	322
GND 07-09		B07D1		1-29 *	H						1		P	HAND WIRE	322
GND 07-09		B07C2		1-30 *	H						2		P	HAND WIRE	322
GND 07-09		B08E1		1-31 *	*						1		P	TO HERE	322
GND 07-09		B08D1		1-32 *	H						2		P	HAND WIRE	322
GND 07-09		B09E1		1-33 *	H						1		P	HAND WIRE	322
GND 07-09		B09D1		1-34 *	H						2		P	HAND WIRE	322
GND 07-09		B09C2		1-35 *	H						1		P	HAND WIRE	322
GND 07-09		B09B2		1-36 *	H						2		P	HAND WIRE	322
GND 07-09		B09V2		1-37 *	H						1		P	HAND WIRE	322
GND 07-09		B09T1		1-38 *	H						2		P	HAND WIRE	322
GND 07-09		B08V2		1-39 *	H						1		P	HAND WIRE	322
GND 07-09		B08T1		1-40 *	H						2		P	HAND WIRE	322
GND 07-09		B07V2		1-41 *	H						1		P	HAND WIRE	322
GND 07-09		B07T1		1-42 *	H						2		P	HAND WIRE	322
GND 07-09		C07C2		1-43 *	H						1		P	HAND WIRE	322
GND 07-09		C08C2		1-44 *	H						2		P	HAND WIRE	322
GND 07-09		C09C2		1-45 *	H						1		P	HAND WIRE	322
GND 07-09		C09T1		1-46 *	H						2		P	HAND WIRE	322
GND 07-09		C08T1		1-47 *	H						1		P	HAND WIRE	322
GND 07-09		C07T1		1-48 *	H						2		P	HAND WIRE	322
GND 07-09		D07C2		1-49 *	H						1		P	HAND WIRE	322
GND 07-09		D08C2		1-50 *	H						2		P	HAND WIRE	322
GND 07-09		D09C2		1-51 *	H						1		P	HAND WIRE	322
GND 07-09		D09T1		1-52 *	H						2		P	HAND WIRE	322
GND 07-09		D08T1		1-53 *	H						1		P	HAND WIRE	322
GND 07-09		D07T1		1-54 *	H						2		P	HAND WIRE	322
GND 07-09		E07C2		1-55 *	H						1		P	HAND WIRE	322

RUN NAME	A/P	PIN NAME	ORDER PIN	BAY - ORDER	Q	DRAW	RV	PG	Y	X	#	REMARKS	LENGTH	EXCEPTIONS	RUN NUMBER
GND 07-09		E09C2		1-57 *	H						1		P	HAND WIRE	322
GND 07-09		E09T1		1-58 *	H						2		P	HAND WIRE	322
GND 07-09		E08T1		1-59 *	H						1		P	HAND WIRE	322
GND 07-09		E07T1		1-60 *	H						2		P	HAND WIRE	322
GND 07-09		F07C2		1-61 *	H						1		P	HAND WIRE	322
GND 07-09		F08C2		1-62 *	H						2		P	HAND WIRE	322
GND 07-09		F08T1		1-63 *	H						1		P	HAND WIRE	322
GND 07-09		F07T1		1-64 *	H								P	H TO WHERE	322
GND 07-09				1									178-4/8		322
GND 07-09		F09C2		1-01 *	H						1		P	TOO MNY PN	322
GND 07-09		F09T1		1-02 *	H								P	TOO MNY PN	322
GND 07-09				1									4-0/8		322
LEI EDGE	H	E02J2		1-01 *							1				323
LEI EDGE	H	E03F2		1-02 *											323
LEI EDGE				1									3-0/8		323
LEI L,P, FLAG (0)	H	A02V2		1-01 *							1				324
LEI L,P, FLAG (0)	H	C03E1		1-02 *											324
LEI L,P, FLAG (0)				1									6-0/8		324
LEI LP INT HIT	H	A02R1		1-01 *							1				325
LEI LP INT HIT	H	A03B2		1-02 *											325
LEI LP INT HIT				1									4-2/8		325
LEI Z AXIS	H	A02K2		1-01 *							1				326
LEI Z AXIS	H	B03M2		1-02 *											326
LEI Z AXIS				1									5-4/8		326
LSC ENABLE PRINT	H	F02S2		1-01 *							1				327
LSC ENABLE PRINT	H	F03M2		1-02 *											327
LSC ENABLE PRINT				1									3-0/8		327
MC L.P. PULSE	L	A01P2		1-01 *							1				328
MC L.P. PULSE	L	A03A1		1-02 *											328
MC L.P. PULSE				1									4-2/8		328
MC Y<X	H	E03H2		1-01 *							1				329
MC Y<X	H	F01T2		1-02 *											329
MC Y<X				1									6-4/8		329
MC Y=X	H	E01S1		1-01 *							1				330
MC Y=X	H	E03K2		1-02 *											330
MC Y=X				1									4-0/8		330

RUN NAME	A/P	PIN NAME	ORDER PIN	BAY - ORDER	Q	DRAW	RV	PG	Y	X	#	REMARKS	LENGTH	EXCEPTIONS	RUN NUMBER
MC Y>X	H	E01U1		1-01 *							1				331
MC Y>X	H	E03L2		1-02 *											331
MC Y>X				1									4-0/8		331
MD GRAPH X	H	B02S1		1-01 *							1				332
MD GRAPH X	H	F03V2		1-02 *											332
MD GRAPH X				1									13-4/8		332
MD GRAPH Y	H	B02R2		1-01 *							1				333
MD GRAPH Y	H	E03B2		1-02 *											333
MD GRAPH Y				1									8-6/8		333
MD JUMP LOAD PULSE	H	A03J2		1-01 *							1				334
MD JUMP LOAD PULSE	H	C02D1		1-02 *											334
MD JUMP LOAD PULSE				1									7-4/8		334
MD PC+2L	L	A03U2		1-01 *							1				335
MD PC+2L	L	E02N1		1-02 *											335
MD PC+2L				1									12-4/8		335
MD POINT	L	A02S2		1-01 *							1				336
MD POINT	L	A03S2		1-02 *											336
MD POINT				1									2-6/8		336
MD PT+REL PT	H	A02U2		1-01 *							1				337
MD PT+REL PT	H	A03B1		1-02 *											337
MD PT+REL PT				1									4-4/8		337
P0 IN		D05E2		1-01 *	H						2		P	HAND WIRE	338
P0 IN		D06E2		1-02 *	H						1		P	HAND WIRE	338
P0 IN		D07E2		1-03 *										TO HERE	338
P0 IN				1									5-4/8		338
P0 SA		D05F1		1-01 *	H						2		P	HAND WIRE	339
P0 SA		D06F1		1-02 *	H						1		P	HAND WIRE	339
P0 SA		D07F1		1-03 *										TO HERE	339
P0 SA				1									5-4/8		339
P0 SB		D05F2		1-01 *	H						2		P	HAND WIRE	340
P0 SB		D06F2		1-02 *	H						1		P	HAND WIRE	340
P0 SB		D07F2		1-03 *										TO HERE	340
P0 SB				1									5-4/8		340
P1 IN		D05E1		1-01 *	H						2		P	HAND WIRE	341
P1 IN		D06E1		1-02 *	H						1		P	HAND WIRE	341
P1 IN		D07E1		1-03 *										TO HERE	341
P1 IN				1									5-4/8		341

RUN NAME	A/P	PIN NAME	ORDER PIN	BAY - ORDER	Q	DRAW	RV	PG	Y	X	#	REMARKS	LENGTH	EXCEPTIONS	RUN NUMBER
P1 SA		D05D1		1-01 *	H						2		P	HAND WIRE	342
P1 SA		D06D1		1-02 *	H						1		P	HAND WIRE	342
P1 SA		D07D1		1-03 *										TO HERE	342
P1 SA				1									5-4/8		342
P1 SB		D05D2		1-01 *	H						2		P	HAND WIRE	343
P1 SB		D06D2		1-02 *	H						1		P	HAND WIRE	343
P1 SB		D07D2		1-03 *										TO HERE	343
P1 SB				1									5-4/8		343
PCC ANALOG CLOCK	H	F01R1		1-01 *	H						1	TWISTED PAIR		HAND WIRE	344
PCC ANALOG CLOCK	H	F03U1		1-02 *	H									H TO WHERE	344
PCC ANALOG CLOCK				1									3-4/8		344
PCC ANALOG EDGE	L	F03P1		1-01 *							1				345
PCC ANALOG EDGE	L	F01U1		1-02 *											345
PCC ANALOG EDGE				1									3-4/8		345
PCC DIS 01 IN	H	D01U1		1-01 *							1				346
PCC DIS 01 IN	H	E03T2		1-02 *											346
PCC DIS 01 IN				1									5-2/8		346
PCC DIS 02 IN	H	E01F2		1-01 *							1				347
PCC DIS 02 IN	H	F03R1		1-02 *											347
PCC DIS 02 IN				1									6-4/8		347
PCC DIS 03 IN	H	E01J2		1-01 *							1				348
PCC DIS 03 IN	H	F03S1		1-02 *											348
PCC DIS 03 IN				1									6-2/8		348
PCC DIS 04 IN	H	E01F1		1-01 *							1				349
PCC DIS 04 IN	H	F03J2		1-02 *											349
PCC DIS 04 IN				1									6-0/8		349
PCC DIS CLK	H	C02F2		1-01 *	H						1	TWISTED PAIR		HAND WIRE	350
PCC DIS CLK	H	D03N2		1-02 *										TO HERE	350
PCC DIS CLK				1									6-0/8		350
PCC PC 01	H	A03R2		1-01 *							1				351
PCC PC 01	H	F02N2		1-02 *											351
PCC PC 01				1									15-4/8		351
PCC PC 02	H	A03S1		1-01 *							1				352
PCC PC 02	H	F02P1		1-02 *											352
PCC PC 02				1									15-4/8		352

RUN NAME	A/P	PIN NAME	ORDER PIN	BAY - ORDER	Q	DRAW	RV	PG	Y	X	#	REMARKS	LENGTH	EXCEPTIONS	RUN NUMBER
PCC PC 03	H	A03T2		1-01 *							1				353
PCC PC 03	H	F02R1		1-02 *											353
PCC PC 03				1									15-6/8		353
PCC PC 04	H	A03V1		1-01 *							1				354
PCC PC 04	H	E02K2		1-02 *											354
PCC PC 04				1									12-0/8		354
PCC PC 05	H	B03K1		1-01 *							1				355
PCC PC 05	H	E02L1		1-02 *											355
PCC PC 05				1									10-4/8		355
PCC PC 06	H	B03L1		1-01 *							1				356
PCC PC 06	H	F02D1		1-02 *											356
PCC PC 06				1									12-2/8		356
PCC PC 07	H	B03J1		1-01 *							1				357
PCC PC 07	H	E02S2		1-02 *											357
PCC PC 07				1									11-2/8		357
PCC PC 08	H	B03H1		1-01 *							1				358
PCC PC 08	H	F02D2		1-02 *											358
PCC PC 08				1									12-4/8		358
PCC PC 09	H	C03K1		1-01 *							1				359
PCC PC 09	H	E02R1		1-02 *											359
PCC PC 09				1									8-4/8		359
PCC PC 10	H	C03J1		1-01 *							1				360
PCC PC 10	H	D02U2		1-02 *											360
PCC PC 10				1									6-4/8		360
PCC PC 11	H	C03H1		1-01 *							1				361
PCC PC 11	H	D02S1		1-02 *											361
PCC PC 11				1									6-2/8		361
PCC PC 12	H	C03F1		1-01 *							1				362
PCC PC 12	H	D02U1		1-02 *											362
PCC PC 12				1									6-6/8		362
PCC PC 13	H	D02R1		1-01 *							1				363
PCC PC 13	H	D03M1		1-02 *											363
PCC PC 13				1									3-0/8		363
PCC PC 14	H	D03L1		1-01 *							1				364
PCC PC 14	H	E02F2		1-02 *											364
PCC PC 14				1									4-4/8		364

RUN NAME	A/P	PIN NAME	ORDER PIN	BAY - ORDER	Q	DRAW	RV	PG	Y	X	℄	REMARKS	LENGTH	EXCEPTIONS	RUN NUMBER
PCC PC 15	H	D03K2		1-01 *							1				365
PCC PC 15	H	E02B1		1-02 *											365
PCC PC 15				1									4-2/8		365
PH X00	H	C01R2		1-01 *							1				366
PH X00	H	F02M1		1-02 *											366
PH X00				1									10-0/8		366
PH X01	H	C01S2		1-01 *							1				367
PH X01	H	F02K1		1-02 *											367
PH X01				1									9-6/8		367
PH X02	H	C01T2		1-01 *							1				368
PH X02	H	F02J1		1-02 *											368
PH X02				1									9-4/8		368
PH X03	H	C01U2		1-01 *							1				369
PH X03	H	F02M2		1-02 *											369
PH X03				1									9-6/8		369
PH X04	H	C01V2		1-01 *							1				370
PH X04	H	E02K1		1-02 *											370
PH X04				1									6-4/8		370
PH X05	H	D01B2		1-01 *							1				371
PH X05	H	E02A1		1-02 *											371
PH X05				1									4-6/8		371
PH X06	H	D01J2		1-01 *							1				372
PH X06	H	F02A1		1-02 *											372
PH X06				1									6-6/8		372
PH X07	H	D01H2		1-01 *							1				373
PH X07	H	E02U1		1-02 *											373
PH X07				1									6-2/8		373
PH X08	H	D01T2		1-01 *							1				374
PH X08	H	F02B1		1-02 *											374
PH X08				1									6-0/8		374
PH X09	H	D01C1		1-01 *							1				375
PH X09	H	E02U2		1-02 *											375
PH X09				1									7-0/8		375
PH X10	H	D01R1		1-01 *							1				376
PH X10	H	F03E1		1-02 *											376
PH X10				1									6-6/8		376

RUN NAME	A/P	PIN NAME	ORDER PIN	BAY - ORDER	Q	DRAW	RV	PG	Y	X	℄	REMARKS	LENGTH	EXCEPTIONS	RUN NUMBER
PH X11	H	D01N1		1-01 *							1				377
PH X11	H	F03D1		1-02 *											377
PH X11				1									7-0/8		377
PH Y00	H	C01L1		1-01 *							1				378
PH Y00	H	F02L1		1-02 *											378
PH Y00				1									10-4/8		378
PH Y01	H	C01M1		1-01 *							1				379
PH Y01	H	F02K2		1-02 *											379
PH Y01				1									10-4/8		379
PH Y02	H	C01N1		1-01 *							1				380
PH Y02	H	F02J2		1-02 *											380
PH Y02				1									10-2/8		380
PH Y03	H	C01P1		1-01 *							1				381
PH Y03	H	F02L2		1-02 *											381
PH Y03				1									10-2/8		381
PH Y04	H	C01R1		1-01 *							1				382
PH Y04	H	E02J1		1-02 *											382
PH Y04				1									7-0/8		382
PH Y05	H	C01S1		1-01 *							1				383
PH Y05	H	E02C1		1-02 *											383
PH Y05				1									6-2/8		383
PH Y06	H	C01U1		1-01 *							1				384
PH Y06	H	E02V1		1-02 *											384
PH Y06				1									8-0/8		384
PH Y07	H	C01V1		1-01 *							1				385
PH Y07	H	E02T2		1-02 *											385
PH Y07				1									7-6/8		385
PH Y08	H	D01A1		1-01 *							1				386
PH Y08	H	E02V2		1-02 *											386
PH Y08				1									7-2/8		386
PH Y09	H	D01B1		1-01 *							1				387
PH Y09	H	E02P2		1-02 *											387
PH Y09				1									6-4/8		387
PH Y10	H	D01S2		1-01 *							1				388
PH Y10	H	F03C1		1-02 *											388
PH Y10				1									6-4/8		388

RUN NAME	A/P	PIN NAME	ORDER PIN	BAY - ORDER	Q	DRAW RV PG Y	X	#	REMARKS	LENGTH	EXCEPTIONS	RUN NUMBER
PR Y11	H	D01R2		1-01 *				1				389
PR Y11	H	E03V1		1-02 *								389
PR Y11				1						5-6/8		389
PVCS DELTA X	H	C01B1		1-01 *				1				390
PVCS DELTA X	H	D02M2		1-02 *								390
PVCS DELTA X				1						6-4/8		390
PVCS DELTA Y	H	A02M1		1-01 *				1				391
PVCS DELTA Y	H	C01D1		1-02 *								391
PVCS DELTA Y				1						7-0/8		391
PVCS DELTA Y	L	A02L1		1-01 *				1				392
PVCS DELTA Y	L	F03K1		1-02 *								392
PVCS DELTA Y				1						15-6/8		392
PVCS GRAPH	L	B02A1		1-01 *				1				393
PVCS GRAPH	L	D03E1		1-02 *				2				393
PVCS GRAPH	L	E01L2		1-03 *								393
PVCS GRAPH				1						14-0/8		393
PVCS INTENSITY LEVEL	H	A02V1		1-01 *				1				394
PVCS INTENSITY LEVEL	H	D03T2		1-02 *								394
PVCS INTENSITY LEVEL				1						10-4/8		394
PVCS LD DELTA Y	H	A02B1		1-01 *				1				395
PVCS LD DELTA Y	H	F01B2		1-02 *								395
PVCS LD DELTA Y				1						15-6/8		395
PVCS LOAD DELTA X	H	C02E2		1-01 *				1				396
PVCS LOAD DELTA X	H	E01M2		1-02 *								396
PVCS LOAD DELTA X				1						8-4/8		396
PVCS LOAD X	L	A02D1		1-01 *				1				397
PVCS LOAD X	L	D01P1		1-02 *								397
PVCS LOAD X				1						11-6/8		397
PVCS LOAD Y	L	B02P2		1-01 *				1				398
PVCS LOAD Y	L	C01K1		1-02 *								398
PVCS LOAD Y				1						4-6/8		398
PVCS POINT OR GRAPH GO		A02M2		1-01 *				1				399
PVCS POINT OR GRAPH GO		F03A1		1-02 *								399
PVCS POINT OR GRAPH GO				1						14-4/8		399

RUN NAME	A/P	PIN NAME	ORDER PIN	BAY - ORDER	Q	DRAW RV PG Y	X	#	REMARKS	LENGTH	EXCEPTIONS	RUN NUMBER
PVCS VEC+CHAR GO	H	A02T2		1-01 *				1				400
PVCS VEC+CHAR GO	H	B03T2		1-02 *								400
PVCS VEC+CHAR GO				1						5-2/8		400
PVCS XUP ENA	H	E03M2		1-01 *				1				401
PVCS XUP ENA	H	F02V2		1-02 *								401
PVCS XUP ENA				1						6-2/8		401
PVCS Y8,Y9	H	D02C1		1-01 *				1				402
PVCS Y8,Y9	H	F03L2		1-02 *								402
PVCS Y8,Y9				1						8-6/8		402
PWR SUPPLY L CLK INT	H	C04D1		1-01 *				1				403
PWR SUPPLY L CLK INT	H	F08V2	A02A1	1-02 *				2				403
PWR SUPPLY L CLK INT	H	A02A1		1-03 *								403
PWR SUPPLY L CLK INT				1						32-2/8		403
READ	H	C06U2		1-01 *	H			1	P		HAND WIRE	404
READ	H	C07U2		1-02 *							TO HERE	404
READ				1						2-6/8		404
RES 1		E05C1		1-01 *	H			1	P		HAND WIRE	405
RES 1		E06C1		1-02 *							TO HERE	405
RES 1				1						2-6/8		405
RES 2		E05B1		1-01 *	H			1	P		HAND WIRE	406
RES 2		E06B1		1-02 *							TO HERE	406
RES 2				1						2-6/8		406
SABR CHAR SCALE (1)	H	B02M1						2			1-PIN RUN	407
SABR INC 00	H	C02N2		1-01 *				1				408
SABR INC 00	H	D01S1		1-02 *								408
SABR INC 00				1						5-6/8		408
SABR INC 01	H	C02S1		1-01 *				1				409
SABR INC 01	H	D01V1		1-02 *								409
SABR INC 01				1						5-6/8		409
SABR INC 02	H	D02A1		1-01 *				1				410
SABR INC 02	H	E01H2		1-02 *								410
SABR INC 02				1						5-6/8		410
SABR INC 03	H	D02B1		1-01 *				1				411
SABR INC 03	H	E01K2		1-02 *								411
SABR INC 03				1						6-0/8		411

RUN NAME	A/P	PIN NAME	ORDER PIN	BAY - ORDER	Q	DRAW	RV	PG	Y	X	±	REMARKS	LENGTH	EXCEPTIONS	RUN NUMBER
SABR INC 04	H	C02N1		1-01 *							1				412
SABR INC 04	H	E01H1		1-02 *											412
SABR INC 04				1									7-2/8		412
SABR INC 05	H	C02L1		1-01 *							1				413
SABR INC 05	H	E01L1		1-02 *											413
SABR INC 05				1									7-6/8		413
SABR ITALICS (1)	H	C01B2		1-01 *							1				414
SABR ITALICS (1)	H	C02L2		1-02 *											414
SABR ITALICS (1)				1									3-4/8		414
SDM DELTA X00	H	D02K2		1-01 *							1				415
SDM DELTA X00	H	E01V2		1-02 *											415
SDM DELTA X00				1									6-2/8		415
SDM DELTA X01	H	D02H2		1-01 *							1				416
SDM DELTA X01	H	E01U2		1-02 *											416
SDM DELTA X01				1									6-2/8		416
SDM DELTA X02	H	C02V2		1-01 *							1				417
SDM DELTA X02	H	E01T2		1-02 *											417
SDM DELTA X02				1									7-4/8		417
SDM DELTA X03	H	C02S2		1-01 *							1				418
SDM DELTA X03	H	E01S2		1-02 *											418
SDM DELTA X03				1									7-6/8		418
SDM DELTA X04	H	C02V1		1-01 *							1				419
SDM DELTA X04	H	E01R2		1-02 *											419
SDM DELTA X04				1									7-2/8		419
SDM DELTA X05	H	C02U1		1-01 *							1				420
SDM DELTA X05	H	E01N1		1-02 *											420
SDM DELTA X05				1									7-2/8		420
SDM DELTA X06	H	D02L2		1-01 *							1				421
SDM DELTA X06	H	E01P1		1-02 *											421
SDM DELTA X06				1									5-4/8		421
SDM DELTA X07	H	D02J1		1-01 *							1				422
SDM DELTA X07	H	E01M1		1-02 *											422
SDM DELTA X07				1									5-4/8		422
SDM DELTA X08	H	D02L1		1-01 *							1				423
SDM DELTA X08	H	E01J1		1-02 *											423
SDM DELTA X08				1									4-6/8		423

RUN NAME	A/P	PIN NAME	ORDER PIN	BAY - ORDER	Q	DRAW	RV	PG	Y	X	±	REMARKS	LENGTH	EXCEPTIONS	RUN NUMBER
SDM DELTA X09	H	D02H1		1-01 *							1				424
SDM DELTA X09	H	E01N2		1-02 *											424
SDM DELTA X09				1									5-4/8		424
SDM DELTA Y04	H	C02U2		1-01 *							1				425
SDM DELTA Y04	H	F01N1		1-02 *											425
SDM DELTA Y04				1									10-0/8		425
SDM DELTA Y05	H	C02R2		1-01 *							1				426
SDM DELTA Y05	H	F01J2		1-02 *											426
SDM DELTA Y05				1									9-6/8		426
SDM DELTA Y06	H	C02T2		1-01 *							1				427
SDM DELTA Y06	H	F01H2		1-02 *											427
SDM DELTA Y06				1									9-4/8		427
SDM DELTA Y07	H	C02P2		1-01 *							1				428
SDM DELTA Y07	H	F01F2		1-02 *											428
SDM DELTA Y07				1									9-6/8		428
SDM DELTA Y08	H	D02M1		1-01 *							1				429
SDM DELTA Y08	H	F01E2		1-02 *											429
SDM DELTA Y08				1									7-0/8		429
SDM DELTA Y09	H	D02J2		1-01 *							1				430
SDM DELTA Y09	H	F01D2		1-02 *											430
SDM DELTA Y09				1									7-2/8		430
SDM STATUS 00	H	B03A1		1-01 *							1				431
SDM STATUS 00	H	F02P2		1-02 *											431
SDM STATUS 00				1									14-4/8		431
SDM STATUS 01	H	B03C1		1-01 *							1				432
SDM STATUS 01	H	F02N1		1-02 *											432
SDM STATUS 01				1									14-2/8		432
SDM STATUS 02	H	B03F1		1-01 *							1				433
SDM STATUS 02	H	F02R2		1-02 *											433
SDM STATUS 02				1									14-0/8		433
SDM STATUS 03	H	B03D1		1-01 *							1				434
SDM STATUS 03	H	F02S1		1-02 *											434
SDM STATUS 03				1									14-4/8		434
SDM STATUS 04	H	B03U1		1-01 *							1				435
SDM STATUS 04	H	E02L2		1-02 *											435
SDM STATUS 04				1									9-2/8		435

RUN NAME	A/P	PIN NAME	ORDER PIN	BAY - ORDER	Q	DRAW RV PG Y	X	#	REMARKS	LENGTH	6152 EXCEPTIONS	RUN NUMBER
SDM STATUS 05	H	B03V1		1-01 *				1				436
SDM STATUS 05	H	E02M1		1-02 *								436
SDM STATUS 05				1						9-4/8		436
SDM STATUS 06	H	C03D1		1-01 *				1				437
SDM STATUS 06	H	F02E1		1-02 *								437
SDM STATUS 06				1						10-6/8		437
SDM STATUS 07	H	C03A1		1-01 *				1				438
SDM STATUS 07	H	F02H1		1-02 *								438
SDM STATUS 07				1						11-2/8		438
SDM STATUS 08	H	C03P2		1-01 *				1				439
SDM STATUS 08	H	F02E2		1-02 *								439
SDM STATUS 08				1						9-4/8		439
SDM STATUS 09	H	C03T2		1-01 *				1				440
SDM STATUS 09	H	F02C1		1-02 *								440
SDM STATUS 09				1						9-0/8		440
SDM STATUS 10	H	C03U2		1-01 *				1				441
SDM STATUS 10	H	D02V2		1-02 *								441
SDM STATUS 10				1						5-4/8		441
SDM STATUS 11	H	C03M2		1-01 *				1				442
SDM STATUS 11	H	D02T2		1-02 *								442
SDM STATUS 11				1						6-0/8		442
SDM STATUS 12	H	D02V1		1-01 *				1				443
SDM STATUS 12	H	E03C1		1-02 *								443
SDM STATUS 12				1						3-2/8		443
SDM STATUS 13	H	D02S2		1-01 *				1				444
SDM STATUS 13	H	E03B1		1-02 *								444
SDM STATUS 13				1						3-4/8		444
SDM STATUS 14	H	D03U1		1-01 *				1				445
SDM STATUS 14	H	E02H2		1-02 *								445
SDM STATUS 14				1						3-6/8		445
SDM STATUS 15	H	E02D1		1-01 *				1				446
SDM STATUS 15	H	E03A1		1-02 *								446
SDM STATUS 15				1						3-0/8		446
TO LOAD PULSE	H	A02N2		1-01 *				1				447
TO LOAD PULSE	H	B03U2		1-02 *								447
TO LOAD PULSE				1						6-0/8		447

RUN NAME	A/P	PIN NAME	ORDER PIN	BAY - ORDER	Q	DRAW RV PG Y	X	#	REMARKS	LENGTH	6152 EXCEPTIONS	RUN NUMBER
TO N,P,R, REQ (0)	H	A02E1		1-01 *				1				448
TO N,P,R, REQ (0)	H	F03R2		1-02 *								448
TO N,P,R, REQ (0)				1						17-0/8		448
THERM 1		E05A1		1-01 *	H			1		P	HAND WIRE	449
THERM 1		E06A1		1-02 *							TO HERE	449
THERM 1				1						2-6/8		449
TNAR	H	C06V2		1-01 *	H			1		P	HAND WIRE	450
TNAR	H	C07V2		1-02 *							TO HERE	450
TNAR				1						2-6/8		450
TWID	H	C06V1		1-01 *	H			1		P	HAND WIRE	451
TWID	H	C07V1		1-02 *							TO HERE	451
TWID				1						2-6/8		451
VC1 CHAR+GRAPH MODE	H	E03U1		1-01 *				1				452
VC1 CHAR+GRAPH MODE	H	F01E1		1-02 *								452
VC1 CHAR+GRAPH MODE				1						4-0/8		452
VC1 CLR DELTA REG	L	C03V2		1-01 *				1				453
VC1 CLR DELTA REG	L	F01S2		1-02 *								453
VC1 CLR DELTA REG				1						10-4/8		453
VC1 CLR FLAGS	L	A03N2		1-01 *				1				454
VC1 CLR FLAGS	L	B02B1		1-02 *								454
VC1 CLR FLAGS				1						4-2/8		454
VC1 COUNT CLK		E03P1		1-01 *				1				455
VC1 COUNT CLK		F01L1		1-02 *								455
VC1 COUNT CLK				1						5-0/8		455
VC1 ENABLE	L	D03J2		1-01 *				1				456
VC1 ENABLE	L	F01P1		1-02 *								456
VC1 ENABLE				1						8-6/8		456
VC1 LOAD DAC	H	C03R2		1-01 *				1				457
VC1 LOAD DAC	H	D01D2		1-02 *								457
VC1 LOAD DAC				1						4-2/8		457
VC1 LOAD DOWN COUNT	L	E01D1		1-01 *				1				458
VC1 LOAD DOWN COUNT	L	E03U2		1-02 *								458
VC1 LOAD DOWN COUNT				1						4-4/8		458
VC1 RESET	L	A02U1		1-01 *				1				459
VC1 RESET	L	A03K2		1-02 *								459
VC1 RESET				1						3-6/8		459

RUN NAME	A/P	PIN NAME	ORDER PIN	BAY - ORDER	Q	DRAW RV PG Y	X	±	REMARKS	LENGTH	6152 EXCEPTIONS	RUN NUMBER
VC1 SHIFT CLK	H	D03E2		1-01 *				1				460
VC1 SHIFT CLK	H	E01P2		1-02 *								460
VC1 SHIFT CLK				1						6-2/8		460
VC1 UNLATCH	H	C01C1		1-01 *				1				461
VC1 UNLATCH	H	C03S2		1-02 *								461
VC1 UNLATCH				1						4-4/8		461
VC2 CLK X DOWN		D01M2		1-01 *				1				462
VC2 CLK X DOWN		E03E2		1-02 *								462
VC2 CLK X DOWN				1						4-4/8		462
VC2 CLK X UP		D01J1		1-01 *				1				463
VC2 CLK X UP		E03N1		1-02 *								463
VC2 CLK X UP				1						5-6/8		463
VC2 CLK Y DOWN		D01E2		1-01 *				1				464
VC2 CLK Y DOWN		D03V2		1-02 *								464
VC2 CLK Y DOWN				1						4-4/8		464
VC2 CLK Y UP		D01E1		1-01 *				1				465
VC2 CLK Y UP		F03V1		1-02 *								465
VC2 CLK Y UP				1						9-6/8		465
VC2 DOWN COUNT CLK	L	E01E2		1-01 *				1				466
VC2 DOWN COUNT CLK	L	E03J2	A02N1	1-02 *				2				466
VC2 DOWN COUNT CLK	L	A02N1		1-03 *								466
VC2 DOWN COUNT CLK				1						16-4/8		466
VC2 VEC GEN OP DONE		A02F2		1-01 *				1				467
VC2 VEC GEN OP DONE		B03R1		1-02 *								467
VC2 VEC GEN OP DONE				1						6-2/8		467
VR ANALOG +15V		A01D2									1-PIN RUN	468
VR ANALOG -15V		A01E2									1-PIN RUN	469
VR INTENSITY ENA	H	F01J1		1-01 *	2			2				470
VR INTENSITY ENA	H	A01B2		1-02 *				1				470
VR INTENSITY ENA	H	A02J2		1-03 *								470
VR INTENSITY ENA				1						19-6/8		470
XNWD0		F05K2		1-01 *	H			1	P		HAND WIRE	471
XNWD0		F06K2		1-02 *							TO HERE	471
XNWD0				1						2-6/8		471

RUN NAME	A/P	PIN NAME	ORDER PIN	BAY - ORDER	Q	DRAW RV PG Y	X	±	REMARKS	LENGTH	6152 EXCEPTIONS	RUN NUMBER
XNWD1		F05L2		1-01 *	H			1	P		HAND WIRE	472
XNWD1		F06L2		1-02 *							TO HERE	472
XNWD1				1						2-6/8		472
XNWD2		F05M2		1-01 *	H			1	P		HAND WIRE	473
XNWD2		F06M2		1-02 *							TO HERE	473
XNWD2				1						2-6/8		473
XNWD3		F05N2		1-01 *	H			1	P		HAND WIRE	474
XNWD3		F06N2		1-02 *							TO HERE	474
XNWD3				1						2-6/8		474
XNWD4		F05P2		1-01 *	H			1	P		HAND WIRE	475
XNWD4		F06P2		1-02 *							TO HERE	475
XNWD4				1						2-6/8		475
XNWD5		F05R2		1-01 *	H			1	P		HAND WIRE	476
XNWD5		F06R2		1-02 *							TO HERE	476
XNWD5				1						2-6/8		476
XNWD6		F05S2		1-01 *	H			1	P		HAND WIRE	477
XNWD6		F06S2		1-02 *							TO HERE	477
XNWD6				1						2-6/8		477
XNWD7		F05T2		1-01 *	H			1	P		HAND WIRE	478
XNWD7		F06T2		1-02 *							TO HERE	478
XNWD7				1						2-6/8		478
XPRD0		F05L1		1-01 *	H			1	P		HAND WIRE	479
XPRD0		F06L1		1-02 *							TO HERE	479
XPRD0				1						2-6/8		479
XPRD1		F05M1		1-01 *	H			1	P		HAND WIRE	480
XPRD1		F06M1		1-02 *							TO HERE	480
XPRD1				1						2-6/8		480
XPRD2		F05N1		1-01 *	H			1	P		HAND WIRE	481
XPRD2		F06N1		1-02 *							TO HERE	481
XPRD2				1						2-6/8		481
XPRD3		F05P1		1-01 *	H			1	P		HAND WIRE	482
XPRD3		F06P1		1-02 *							TO HERE	482
XPRD3				1						2-6/8		482
XPRD4		F05R1		1-01 *	H			1	P		HAND WIRE	483
XPRD4		F06R1		1-02 *							TO HERE	483
XPRD4				1						2-6/8		483

RUN NAME	A/P	PIN NAME	ORDER PIN	BAY - ORDER	Q	DRAW	RV	PG	Y	X	≠	REMARKS	LENGTH	EXCEPTIONS	RUN NUMBER
XPRD5		F05S1		1-01 *	H						1		P	HAND WIRE	484
XPRD5		F06S1		1-02 *										TO HERE	484
XPRD5				1									2-6/8		484
XPRD6		F05U2		1-01 *	H						1		P	HAND WIRE	485
XPRD6		F06U2		1-02 *										TO HERE	485
XPRD6				1									2-6/8		485
XPRD7		F05V2		1-01 *	H						1		P	HAND WIRE	486
XPRD7		F06V2		1-02 *										TO HERE	486
XPRD7				1									2-6/8		486
XS 00		C05R2		1-01 *	H						1		P	HAND WIRE	487
XS 00		C06R2		1-02 *										TO HERE	487
XS 00				1									2-6/8		487
XS 01		C05S1		1-01 *	H						1		P	HAND WIRE	488
XS 01		C06S1		1-02 *										TO HERE	488
XS 01				1									2-6/8		488
XS 02		C05S2		1-01 *	H						1		P	HAND WIRE	489
XS 02		C06S2		1-02 *										TO HERE	489
XS 02				1									2-6/8		489
XS 03		C05T2		1-01 *	H						1		P	HAND WIRE	490
XS 03		C06T2		1-02 *										TO HERE	490
XS 03				1									2-6/8		490
XS 04		F05C1		1-01 *	H						1		P	HAND WIRE	491
XS 04		F06C1		1-02 *										TO HERE	491
XS 04				1									2-6/8		491
XS 05		F05D1		1-01 *	H						1		P	HAND WIRE	492
XS 05		F06D1		1-02 *										TO HERE	492
XS 05				1									2-6/8		492
XS 06		F05D2		1-01 *	H						1		P	HAND WIRE	493
XS 06		F06D2		1-02 *										TO HERE	493
XS 06				1									2-6/8		493
XS 07		F05E1		1-01 *	H						1		P	HAND WIRE	494
XS 07		F06E1		1-02 *										TO HERE	494
XS 07				1									2-6/8		494
XS 08		F05E2		1-01 *	H						1		P	HAND WIRE	495
XS 08		F06E2		1-02 *										TO HERE	495
XS 08				1									2-6/8		495

RUN NAME	A/P	PIN NAME	ORDER PIN	BAY - ORDER	Q	DRAW	RV	PG	Y	X	≠	REMARKS	LENGTH	EXCEPTIONS	RUN NUMBER
XS 09		F05F1		1-01 *	H						1		P	HAND WIRE	496
XS 09		F06F1		1-02 *										TO HERE	496
XS 09				1									2-6/8		496
XS 10		F05F2		1-01 *	H						1		P	HAND WIRE	497
XS 10		F06F2		1-02 *										TO HERE	497
XS 10				1									2-6/8		497
XS 11		F05H1		1-01 *	H						1		P	HAND WIRE	498
XS 11		F06H1		1-02 *										TO HERE	498
XS 11				1									2-6/8		498
XS 12		F05H2		1-01 *	H						1		P	HAND WIRE	499
XS 12		F06H2		1-02 *										TO HERE	499
XS 12				1									2-6/8		499
XS 13		F05J1		1-01 *	H						1		P	HAND WIRE	500
XS 13		F06J1		1-02 *										TO HERE	500
XS 13				1									2-6/8		500
XS 14		F05J2		1-01 *	H						1		P	HAND WIRE	501
XS 14		F06J2		1-02 *										TO HERE	501
XS 14				1									2-6/8		501
XS 15		F05K1		1-01 *	H						1		P	HAND WIRE	502
XS 15		F06K1		1-02 *										TO HERE	502
XS 15				1									2-6/8		502
YNWD0		C05B1		1-01 *	H						1		P	HAND WIRE	503
YNWD0		C06B1		1-02 *										TO HERE	503
YNWD0				1									2-6/8		503
YNWD1		C05D2		1-01 *	H						1		P	HAND WIRE	504
YNWD1		C06D2		1-02 *										TO HERE	504
YNWD1				1									2-6/8		504
YNWD2		C05E2		1-01 *	H						1		P	HAND WIRE	505
YNWD2		C06E2		1-02 *										TO HERE	505
YNWD2				1									2-6/8		505
YNWD3		C05F2		1-01 *	H						1		P	HAND WIRE	506
YNWD3		C06F2		1-02 *										TO HERE	506
YNWD3				1									2-6/8		506
YNWD4		C05H2		1-01 *	H						1		P	HAND WIRE	507
YNWD4		C06H2		1-02 *										TO HERE	507
YNWD4				1									2-6/8		507

A/P	PIN NAME	ORDER PIN	BAY - ORDER	Q	DRAW RV PG Y	X	#	REMARKS	LENGTH	EXCEPTIONS	RUN NUMBER
	YNWD5		C05J2	1-01 *	H		1		P	HAND WIRE	508
	YNWD5		C06J2	1-02 *						TO HERE	508
	YNWD5			1					2-6/8		508
	YNWD6		C05K2	1-01 *	H		1		P	HAND WIRE	509
	YNWD6		C06K2	1-02 *						TO HERE	509
	YNWD6			1					2-6/8		509
	YNWD7		C05L2	1-01 *	H		1		P	HAND WIRE	510
	YNWD7		C06L2	1-02 *						TO HERE	510
	YNWD7			1					2-6/8		510
	YPRD0		C05A1	1-01 *	H		1		P	HAND WIRE	511
	YPRD0		C06A1	1-02 *						TO HERE	511
	YPRD0			1					2-6/8		511
	YPRD1		C05C1	1-01 *	H		1		P	HAND WIRE	512
	YPRD1		C06C1	1-02 *						TO HERE	512
	YPRD1			1					2-6/8		512
	YPRD2		C05D1	1-01 *	H		1		P	HAND WIRE	513
	YPRD2		C06D1	1-02 *						TO HERE	513
	YPRD2			1					2-6/8		513
	YPRD3		C05E1	1-01 *	H		1		P	HAND WIRE	514
	YPRD3		C06E1	1-02 *						TO HERE	514
	YPRD3			1					2-6/8		514
	YPRD4		C05F1	1-01 *	H		1		P	HAND WIRE	515
	YPRD4		C06F1	1-02 *						TO HERE	515
	YPRD4			1					2-6/8		515
	YPRD5		C05H1	1-01 *	H		1		P	HAND WIRE	516
	YPRD5		C06H1	1-02 *						TO HERE	516
	YPRD5			1					2-6/8		516
	YPRD6		C05J1	1-01 *	H		1		P	HAND WIRE	517
	YPRD6		C06J1	1-02 *						TO HERE	517
	YPRD6			1					2-6/8		517
	YPRD7		C05K1	1-01 *	H		1		P	HAND WIRE	518
	YPRD7		C06K1	1-02 *						TO HERE	518
	YPRD7			1					2-6/8		518
	YS 00		C05L1	1-01 *	H		1		P	HAND WIRE	519
	YS 00		C06L1	1-02 *						TO HERE	519
	YS 00			1					2-6/8		519

A/P	PIN NAME	ORDER PIN	BAY - ORDER	Q	DRAW RV PG Y	X	#	REMARKS	LENGTH	EXCEPTIONS	RUN NUMBER
	YS 01		C05M1	1-01 *	H		1		P	HAND WIRE	520
	YS 01		C06M1	1-02 *						TO HERE	520
	YS 01			1					2-6/8		520
	YS 02		C05M2	1-01 *	H		1		P	HAND WIRE	521
	YS 02		C06M2	1-02 *						TO HERE	521
	YS 02			1					2-6/8		521
	YS 03		C05N1	1-01 *	H		1		P	HAND WIRE	522
	YS 03		C06N1	1-02 *						TO HERE	522
	YS 03			1					2-6/8		522
	YS 04		C05N2	1-01 *	H		1		P	HAND WIRE	523
	YS 04		C06N2	1-02 *						TO HERE	523
	YS 04			1					2-6/8		523
	YS 05		C05P1	1-01 *	H		1		P	HAND WIRE	524
	YS 05		C06P1	1-02 *						TO HERE	524
	YS 05			1					2-6/8		524
	YS 06		C05P2	1-01 *	H		1		P	HAND WIRE	525
	YS 06		C06P2	1-02 *						TO HERE	525
	YS 06			1					2-6/8		525
	YS 07		C05R1	1-01 *	H		1		P	HAND WIRE	526
	YS 07		C06R1	1-02 *						TO HERE	526
	YS 07			1					2-6/8		526

ERROR LISTING

WIRE WRAP RUN NAME	A/P	PIN NAME	ORDER PIN	BAY - ORDER	Q	DRAW	RV	PG	Y	X	Z	REMARKS	LENGTH	EXCEPTIONS	RUN NUMBER
HND288,V17(17) 06/22/72													1-MAR-73	0152	PAGE 1
+15V		E09P2		1-01 *	H						2	24 AWG		HAND WIRE	1
+15V		F01R2		1-02 *	H						1	24AWG		HAND WIRE	1
+15V		D03R2		1-03 *	H						2	24AWG		HAND WIRE	1
+15V		C04U1		1-04 *								24AWG		TO HERE	1
+5 VDC		A01A2		1-01 *	H						2		P	HAND WIRE	2
+5 VDC		A02A2		1-02 *	H						1		P	HAND WIRE	2
+5 VDC		A03A2		1-03 *	H						2		P	HAND WIRE	2
+5 VDC		A04A2		1-04 *	H						1		P	HAND WIRE	2
+5 VDC		A05A2		1-05 *	H						2		P	HAND WIRE	2
+5 VDC		A06A2		1-06 *	H						1		P	HAND WIRE	2
+5 VDC		A07A2		1-07 *	H						2		P	HAND WIRE	2
+5 VDC		A09A2		1-08 *	H						1		P	HAND WIRE	2
+5 VDC		A08A2		1-09 *	H						2		P	HAND WIRE	2
+5 VDC		B09A2		1-10 *	H						1		P	HAND WIRE	2
+5 VDC		B08A2		1-11 *	H						2		P	HAND WIRE	2
+5 VDC		B07A2		1-12 *	H						1		P	HAND WIRE	2
+5 VDC		B06A2		1-13 *	H						2		P	HAND WIRE	2
+5 VDC		B05A2		1-14 *	H						1		P	HAND WIRE	2
+5 VDC		B04A2		1-15 *	H						2		P	HAND WIRE	2
+5 VDC		B03A2	B02A2	1-16 *	H						1		P	HAND WIRE	2
+5 VDC		B02A2		1-17 *	H						2		P	HAND WIRE	2
+5 VDC		B01B1		1-18 *	H						1		P	HAND WIRE	2
+5 VDC		B01A2		1-19 *	H						2		P	HAND WIRE	2
+5 VDC		C01A2		1-20 *	H						1		P	HAND WIRE	2
+5 VDC		C02A2		1-21 *	H						2		P	HAND WIRE	2
+5 VDC		C03A2		1-22 *	H						1		P	HAND WIRE	2
+5 VDC		C04A2		1-23 *	H						2		P	HAND WIRE	2
+5 VDC		C05A2		1-24 *	H						1		P	HAND WIRE	2
+5 VDC		C06A2		1-25 *	H						2		P	HAND WIRE	2
+5 VDC		C07A2		1-26 *	H						1		P	HAND WIRE	2
+5 VDC		C08A2		1-27 *	H						2		P	HAND WIRE	2
+5 VDC		C09A2		1-28 *	H						1		P	HAND WIRE	2
+5 VDC		D09A2	D08A2	1-29 *	H						2		P	HAND WIRE	2
+5 VDC		D08A2		1-30 *	H						1		P	HAND WIRE	2
+5 VDC		D07A2		1-31 *	H						2		P	HAND WIRE	2
+5 VDC		D06A2		1-32 *	H						1		P	HAND WIRE	2
+5 VDC		D05A2		1-33 *	H						2		P	HAND WIRE	2
+5 VDC		D04A2		1-34 *	H						1		P	HAND WIRE	2
+5 VDC		D03A2		1-35 *	H						2		P	HAND WIRE	2
+5 VDC		D02A2		1-36 *	H						1		P	HAND WIRE	2
+5 VDC		D01A2		1-37 *	H						2		P	HAND WIRE	2
+5 VDC		E01A2		1-38 *	H						1		P	HAND WIRE	2
+5 VDC		E02A2		1-39 *	H						2		P	HAND WIRE	2
+5 VDC		E03A2		1-40 *	H						1		P	HAND WIRE	2
+5 VDC		E04A2		1-41 *	H						2		P	HAND WIRE	2
+5 VDC		E05A2		1-42 *	H						1		P	HAND WIRE	2
+5 VDC		E06A2		1-43 *	H						2		P	HAND WIRE	2
+5 VDC		E07A2		1-44 *	H						1		P	HAND WIRE	2
+5 VDC		E08A2		1-45 *	H						2		P	HAND WIRE	2
+5 VDC		E09A2		1-46 *	H						1		P	HAND WIRE	2
+5 VDC		F09A2		1-47 *	H						2		P	HAND WIRE	2
+5 VDC		F08A2		1-48 *	H						1		P	HAND WIRE	2
+5 VDC		F07A2		1-49 *	H						2		P	HAND WIRE	2

ERROR LISTING

GI40,B RUN NAME	A/P	PIN NAME	ORDER PIN	BAY - ORDER	Q	DRAW	RV	PG	Y	X	Z	REMARKS	LENGTH	EXCEPTIONS	RUN NUMBER
HND288,V17(17) 06/22/72													1-MAR-73	0152	PAGE 2
+5 VDC		F06A2		1-50 *	H						1		P	HAND WIRE	2

RUN NAME	A/P	PIN NAME	ORDER PIN	BAY - ORDER	Q	DRAW	RV	PG	Y	X	±	REMARKS	LENGTH	EXCEPTIONS	RUN NUMBER
+5 VDC		F05A2		1-51 *	H						2		P	HAND WIRE	2
+5 VDC		F04A2		1-52 *	H						1		P	HAND WIRE	2
+5 VDC		F03A2		1-53 *	H						2		P	HAND WIRE	2
+5 VDC		F02A2		1-54 *	H						1		P	HAND WIRE	2
+5 VDC		F01A2		1-55 *	H								P	H TO WHERE	2
-15V		C07B2		1-01 *	H						2		P	HAND WIRE	3
-15V		C06B2		1-02 *	H						1		P	HAND WIRE	3
-15V		C05B2		1-03 *	H						2		P	HAND WIRE	3
-15V		C04B2		1-04 *	H						1		P	HAND WIRE	3
-15V		D04B2		1-05 *	H						2		P	HAND WIRE	3
-15V		D05B2		1-06 *	H						1		P	HAND WIRE	3
-15V		D06B2		1-07 *	H						2		P	HAND WIRE	3
-15V		D07B2		1-08 *	H						1		P	HAND WIRE	3
-15V		E07B2		1-09 *	H						2		P	HAND WIRE	3
-15V		E06B2		1-10 *	H						1		P	HAND WIRE	3
-15V		E05B2		1-11 *	H						2		P	HAND WIRE	3
-15V		E04B2		1-12 *	H						1		P	HAND WIRE	3
-15V		F04B2		1-13 *	H						2		P	HAND WIRE	3
-15V		F05B2		1-14 *	H						1		P	HAND WIRE	3
-15V		F06B2		1-15 *	H						2		P	HAND WIRE	3
-15V		F07B2		1-16 *	H						1		P	HAND WIRE	3
-15V		F09B2		1-17 *										TO HERE	3
00 IN		E05U2		1-01 *	H						2		P	HAND WIRE	4
00 IN		E06U2		1-02 *	H						1		P	HAND WIRE	4
00 IN		E07U2		1-03 *										TO HERE	4
00 SA		E05V1		1-01 *	H						2		P	HAND WIRE	5
00 SA		E06V1		1-02 *	H						1		P	HAND WIRE	5
00 SA		E07V1		1-03 *										TO HERE	5
00 SB		E05V2		1-01 *	H						2		P	HAND WIRE	6
00 SB		E06V2		1-02 *	H						1		P	HAND WIRE	6
00 SB		E07V2		1-03 *										TO HERE	6
01 IN		E07R1		1-01 *	H						2		P	HAND WIRE	7
01 IN		E06R1		1-02 *	H						1		P	HAND WIRE	7
01 IN		E05R1		1-03 *										TO HERE	7
01 SA		E05P1		1-01 *	H						2		P	HAND WIRE	8
01 SA		E06P1		1-02 *	H						1		P	HAND WIRE	8
01 SA		E07P1		1-03 *										TO HERE	8
01 SB		E05P2		1-01 *	H						2		P	HAND WIRE	9
01 SB		E06P2		1-02 *	H						1		P	HAND WIRE	9
01 SB		E07P2		1-03 *										TO HERE	9
02 IN		E05M1		1-01 *	H						2		P	HAND WIRE	10
02 IN		E06M1		1-02 *	H						1		P	HAND WIRE	10
02 IN		E07M1		1-03 *										TO HERE	10
02 SA		E05L1		1-01 *	H						2		P	HAND WIRE	11
02 SA		E06L1		1-02 *	H						1		P	HAND WIRE	11
02 SA		E07L1		1-03 *										TO HERE	11
02 SB		E05L2		1-01 *	H						2		P	HAND WIRE	12
02 SB		E06L2		1-02 *	H						1		P	HAND WIRE	12

ERROR LISTING

RUN NAME	A/P	PIN NAME	ORDER PIN	BAY - ORDER	Q	DRAW	RV	PG	Y	X	±	REMARKS	LENGTH	EXCEPTIONS	RUN NUMBER
02 SB		E07L2		1-03 *										TO HERE	12
03 IN		E05J1		1-01 *	H						2		P	HAND WIRE	13
03 IN		E06J1		1-02 *	H						1		P	HAND WIRE	13
03 IN		E07J1		1-03 *										TO HERE	13
03 SA		E05H1		1-01 *	H						2		P	HAND WIRE	14
03 SA		E06H1		1-02 *	H						1		P	HAND WIRE	14
03 SA		E07H1		1-03 *										TO HERE	14
03 SB		E05H2		1-01 *	H						2		P	HAND WIRE	15
03 SB		E06H2		1-02 *	H						1		P	HAND WIRE	15
03 SB		E07H2		1-03 *										TO HERE	15
04 IN		E05R2		1-01 *	H						2		P	HAND WIRE	16
04 IN		E06R2		1-02 *	H						1		P	HAND WIRE	16
04 IN		E07R2		1-03 *										TO HERE	16
04 SA		E05S1		1-01 *	H						2		P	HAND WIRE	17
04 SA		E06S1		1-02 *	H						1		P	HAND WIRE	17
04 SA		E07S1		1-03 *										TO HERE	17
04 SB		E05S2		1-01 *	H						2		P	HAND WIRE	18
04 SB		E06S2		1-02 *	H						1		P	HAND WIRE	18
04 SB		E07S2		1-03 *										TO HERE	18
05 IN		E05M2		1-01 *	H						2		P	HAND WIRE	19
05 IN		E06M2		1-02 *	H						1		P	HAND WIRE	19
05 IN		E07M2		1-03 *										TO HERE	19
05 SA		E05N1		1-01 *	H						2		P	HAND WIRE	20
05 SA		E06N1		1-02 *	H						1		P	HAND WIRE	20
05 SA		E07N1		1-03 *										TO HERE	20
05 SB		E05N2		1-01 *	H						2		P	HAND WIRE	21
05 SB		E06N2		1-02 *	H						1		P	HAND WIRE	21
05 SB		E07N2		1-03 *										TO HERE	21
06 IN		E05J2		1-01 *	H						2		P	HAND WIRE	22
06 IN		E06J2		1-02 *	H						1		P	HAND WIRE	22
06 IN		E07J2		1-03 *										TO HERE	22
06 SA		E05K1		1-01 *	H						2		P	HAND WIRE	23
06 SA		E06K1		1-02 *	H						1		P	HAND WIRE	23
06 SA		E07K1		1-03 *										TO HERE	23
06 SB		E05K2		1-01 *	H						2		P	HAND WIRE	24
06 SB		E06K2		1-02 *	H						1		P	HAND WIRE	24
06 SB		E07K2		1-03 *										TO HERE	24
07 IN		E05E2		1-01 *	H						2		P	HAND WIRE	25
07 IN		E06E2		1-02 *	H						1		P	HAND WIRE	25
07 IN		E07E2		1-03 *										TO HERE	25
07 SA		E05F1		1-01 *	H						2		P	HAND WIRE	26
07 SA		E06F1		1-02 *	H						1		P	HAND WIRE	26
07 SA		E07F1		1-03 *										TO HERE	26
07 SB		E05F2		1-01 *	H						2		P	HAND WIRE	27
07 SB		E06F2		1-02 *	H						1		P	HAND WIRE	27
07 SB		E07F2		1-03 *										TO HERE	27
08 IN		E05E1		1-01 *	H						2		P	HAND WIRE	28
08 IN		E06E1		1-02 *	H						1		P	HAND WIRE	28
08 IN		E07E1		1-03 *										TO HERE	28
08 SA		E05D1		1-01 *	H						2		P	HAND WIRE	29
08 SA		E06D1		1-02 *	H						1		P	HAND WIRE	29
08 SA		E07D1		1-03 *										TO HERE	29
08 SB		E05D2		1-01 *	H						2		P	HAND WIRE	30

ERROR LISTING

RUN NAME	A/P	PIN NAME	ORDER PIN	BAY - ORDER	Q	DRAW RV PG Y	X	E	REMARKS	LENGTH	EXCEPTIONS	RUN NUMBER
08 SB		E06D2		1-02 *	H			1		P	HAND WIRE	30
08 SB		E07D2		1-03 *							TO HERE	30
09 IN		D05U2		1-01 *	H			2		P	HAND WIRE	31
09 IN		D06U2		1-02 *	H			1		P	HAND WIRE	31
09 IN		D07U2		1-03 *							TO HERE	31
09 SA		D05V1		1-01 *	H			2		P	HAND WIRE	32
09 SA		D06V1		1-02 *	H			1		P	HAND WIRE	32
09 SA		D07V1		1-03 *							TO HERE	32
09 SB		D05V2		1-01 *	H			2		P	HAND WIRE	33
09 SB		D06V2		1-02 *	H			1		P	HAND WIRE	33
09 SB		D07V2		1-03 *							TO HERE	33
10 IN		D05R1		1-01 *	H			2		P	HAND WIRE	34
10 IN		D06R1		1-02 *	H			1		P	HAND WIRE	34
10 IN		D07R1		1-03 *							TO HERE	34
10 SA		D06P1		1-02 *	H			1		P	HAND WIRE	35
10 SA		D07P1		1-03 *							TO HERE	35
10 SB		D05P2		1-01 *	H			2		P	HAND WIRE	36
10 SB		D06P2		1-02 *	*			1		P	TO HERE	36
11 IN		D05M1		1-01 *	H			2		P	HAND WIRE	37
11 IN		D06M1		1-02 *	H			1		P	HAND WIRE	37
11 IN		D07M1		1-03 *							TO HERE	37
11 SA		D05L1		1-01 *	H			2		P	HAND WIRE	38
11 SA		D06L1		1-02 *	H			1		P	HAND WIRE	38
11 SA		D07L1		1-03 *							TO HERE	38
11 SB		D05L2		1-01 *	H			2		P	HAND WIRE	39
11 SB		D06L2		1-02 *	H			1		P	HAND WIRE	39
11 SB		D07L2		1-03 *							TO HERE	39
12 IN		D05J1		1-01 *	H			2		P	HAND WIRE	40
12 IN		D06J1		1-02 *	H			1		P	HAND WIRE	40
12 IN		D07J1		1-03 *							TO HERE	40
12 SA		D05H1		1-01 *	H			2		P	HAND WIRE	41
12 SA		D06H1		1-02 *	H			1		P	HAND WIRE	41
12 SA		D07H1		1-03 *							TO HERE	41
12 SB		D05H2		1-01 *	H			2		P	HAND WIRE	42
12 SB		D06H2		1-02 *	H			1		P	HAND WIRE	42
12 SB		D07H2		1-03 *							TO HERE	42
13 IN		D05R2		1-01 *	H			2		P	HAND WIRE	43
13 IN		D06R2		1-02 *	H			1		P	HAND WIRE	43
13 IN		D07R2		1-03 *							TO HERE	43
13 SA		D05S1		1-01 *	H			2		P	HAND WIRE	44
13 SA		D06S1		1-02 *	H			1		P	HAND WIRE	44
13 SA		D07S1		1-03 *							TO HERE	44
13 SB		D05S2		1-01 *	H			2		P	HAND WIRE	45
13 SB		D06S2		1-02 *	H			1		P	HAND WIRE	45
13 SB		D07S2		1-03 *							TO HERE	45
14 IN		D05M2		1-01 *	H			2		P	HAND WIRE	46
14 IN		D06M2		1-02 *	H			1		P	HAND WIRE	46
14 IN		D07M2		1-03 *							TO HERE	46
14 SA		D05N1		1-01 *	H			2		P	HAND WIRE	47
14 SA		D06N1		1-02 *	H			1		P	HAND WIRE	47
14 SA		D07N1		1-03 *							TO HERE	47
14 SB		D05N2		1-01 *	H			2		P	HAND WIRE	48
14 SB		D06N2		1-02 *	H			1		P	HAND WIRE	48

ERROR LISTING

RUN NAME	A/P	PIN NAME	ORDER PIN	BAY - ORDER	Q	DRAW RV PG Y	X	E	REMARKS	LENGTH	EXCEPTIONS	RUN NUMBER
14 SB		D07N2		1-03 *							TO HERE	48
15 IN		D05J2		1-01 *	H			2		P	HAND WIRE	49
15 IN		D06J2		1-02 *	H			1		P	HAND WIRE	49
15 IN		D07J2		1-03 *							TO HERE	49
15 SA		D05K1		1-01 *	H			2		P	HAND WIRE	50
15 SA		D06K1		1-02 *	H			1		P	HAND WIRE	50
15 SA		D07K1		1-03 *							TO HERE	50
15 SB		D05K2		1-01 *	H			2		P	HAND WIRE	51
15 SB		D06K2		1-02 *	H			1		P	HAND WIRE	51
15 SB		D07K2		1-03 *							TO HERE	51
A01	H	D06A1		1-01 *	H			1		P	HAND WIRE	67
A01	H	D07A1		1-02 *							TO HERE	67
BUS A00	L	B09H2		1-01 *	H			2		P	HAND WIRE	97
BUS A00	L	B05H2		1-02 *	H			1		P	HAND WIRE	97
BUS A00	L	B07H2		1-03 *	H			2		P	HAND WIRE	97
BUS A00	L	B06H2		1-04 *	H			1		P	HAND WIRE	97
BUS A00	L	B08H2		1-05 *				2			TO HERE	97
BUS A01	L	B09H1		1-01 *	H			2		P	HAND WIRE	98
BUS A01	L	B08H1		1-02 *	H			1		P	HAND WIRE	98
BUS A01	L	B07H1		1-03 *	H			2		P	HAND WIRE	98
BUS A01	L	B06H1		1-04 *	H			1		P	HAND WIRE	98
BUS A01	L	B05H1		1-05 *				2			TO HERE	98
BUS A02	L	B09J2		1-01 *	H			2		P	HAND WIRE	99
BUS A02	L	B08J2		1-02 *	H			1		P	HAND WIRE	99
BUS A02	L	B07J2		1-03 *	H			2		P	HAND WIRE	99
BUS A02	L	B06J2		1-04 *	H			1		P	HAND WIRE	99
BUS A02	L	B05J2		1-05 *				2			TO HERE	99
BUS A03	L	B09J1		1-01 *	H			2		P	HAND WIRE	100
BUS A03	L	B08J1		1-02 *	H			1		P	HAND WIRE	100
BUS A03	L	B07J1		1-03 *	H			2		P	HAND WIRE	100
BUS A03	L	B06J1		1-04 *	H			1		P	HAND WIRE	100
BUS A03	L	B05J1		1-05 *				2			TO HERE	100
BUS A04	L	B09K2		1-01 *	H			2		P	HAND WIRE	101
BUS A04	L	B08K2		1-02 *	H			1		P	HAND WIRE	101
BUS A04	L	B07K2		1-03 *	H			2		P	HAND WIRE	101
BUS A04	L	B06K2		1-04 *	H			1		P	HAND WIRE	101
BUS A04	L	B05K2		1-05 *				2			TO HERE	101
BUS A05	L	B09K1		1-01 *	H			2		P	HAND WIRE	102
BUS A05	L	B08K1		1-02 *	H			1		P	HAND WIRE	102
BUS A05	L	B07K1		1-03 *	H			2		P	HAND WIRE	102
BUS A05	L	B06K1		1-04 *	H			1		P	HAND WIRE	102
BUS A05	L	B05K1		1-05 *				2			TO HERE	102
BUS A06	L	B09L2		1-01 *	H			1		P	HAND WIRE	103
BUS A06	L	B08L2		1-02 *	H			2		P	HAND WIRE	103
BUS A06	L	B07L2		1-03 *	H			1		P	HAND WIRE	103
BUS A06	L	B06L2		1-04 *	H			2		P	HAND WIRE	103
BUS A06	L	B05L2		1-05 *				1			TO HERE	103
BUS A07	L	B09L1		1-01 *	H			2		P	HAND WIRE	104
BUS A07	L	B08L1		1-02 *	H			1		P	HAND WIRE	104
BUS A07	L	B07L1		1-03 *	H			2		P	HAND WIRE	104
BUS A07	L	B06L1		1-04 *	H			1		P	HAND WIRE	104
BUS A07	L	B05L1		1-05 *				2			TO HERE	104
BUS A08	L	B09M2		1-01 *	H			2		P	HAND WIRE	105

RUN NAME	A/P	PIN NAME	ORDER PIN	BAY - ORDER	Q	DRAW RV PG Y	X	E	REMARKS	LENGTH	EXCEPTIONS	RUN NUMBER
BUS A08	L	B08M2		1-02 *	H			1		P	HAND WIRE	105
BUS A08	L	B07M2		1-03 *	H			2		P	HAND WIRE	105
BUS A08	L	B06M2		1-04 *	H			1		P	HAND WIRE	105
BUS A08	L	B05M2		1-05 *				2			TO HERE	105
BUS A09	L	B09M1		1-01 *	H			1		P	HAND WIRE	106
BUS A09	L	B08M1		1-02 *	H			2		P	HAND WIRE	106
BUS A09	L	B07M1		1-03 *	H			1		P	HAND WIRE	106
BUS A09	L	B06M1		1-04 *	H			2		P	HAND WIRE	106
BUS A09	L	B05M1		1-05 *				1			TO HERE	106
BUS A10	L	B09N2		1-01 *	H			1		P	HAND WIRE	107
BUS A10	L	B08N2		1-02 *	H			2		P	HAND WIRE	107
BUS A10	L	B07N2		1-03 *	H			1		P	HAND WIRE	107
BUS A10	L	B06N2		1-04 *	H			2		P	HAND WIRE	107
BUS A10	L	B05N2		1-05 *				1			TO HERE	107
BUS A11	L	B09N1		1-01 *	H			1		P	HAND WIRE	108
BUS A11	L	B08N1		1-02 *	H			2		P	HAND WIRE	108
BUS A11	L	B07N1		1-03 *	H			1		P	HAND WIRE	108
BUS A11	L	B06N1		1-04 *	H			2		P	HAND WIRE	108
BUS A11	L	B05N1		1-05 *				1			TO HERE	108
BUS A12	L	B09P2		1-01 *	H			1		P	HAND WIRE	109
BUS A12	L	B08P2		1-02 *	H			2		P	HAND WIRE	109
BUS A12	L	B07P2		1-03 *	H			1		P	HAND WIRE	109
BUS A12	L	B06P2		1-04 *	H			2		P	HAND WIRE	109
BUS A12	L	B05P2		1-05 *				1			TO HERE	109
BUS A13	L	B09P1		1-01 *	H			1		P	HAND WIRE	110
BUS A13	L	B08P1		1-02 *	H			2		P	HAND WIRE	110
BUS A13	L	B07P1		1-03 *	H			1		P	HAND WIRE	110
BUS A13	L	B06P1		1-04 *	H			2		P	HAND WIRE	110
BUS A13	L	B05P1		1-05 *				1			TO HERE	110
BUS A14	L	B09R2		1-01 *	H			1		P	HAND WIRE	111
BUS A14	L	B08R2		1-02 *	H			2		P	HAND WIRE	111
BUS A14	L	B07R2		1-03 *	H			1		P	HAND WIRE	111
BUS A14	L	B06R2		1-04 *	H			2		P	HAND WIRE	111
BUS A14	L	B05R2		1-05 *				1			TO HERE	111
BUS A15	L	B09R1		1-01 *	H			1		P	HAND WIRE	112
BUS A15	L	B08R1		1-02 *	H			2		P	HAND WIRE	112
BUS A15	L	B07R1		1-03 *	H			1		P	HAND WIRE	112
BUS A15	L	B06R1		1-04 *	H			2		P	HAND WIRE	112
BUS A15	L	B05R1		1-05 *				1			TO HERE	112
BUS A16	L	B09S2		1-01 *	H			1		P	HAND WIRE	113
BUS A16	L	B08S2		1-02 *	H			2		P	HAND WIRE	113
BUS A16	L	B07S2		1-03 *	H			1		P	HAND WIRE	113
BUS A16	L	B06S2		1-04 *	H			2		P	HAND WIRE	113
BUS A16	L	B05S2		1-05 *				1			TO HERE	113
BUS A17	L	B09S1		1-01 *	H			1		P	HAND WIRE	114
BUS A17	L	B08S1		1-02 *	H			2		P	HAND WIRE	114
BUS A17	L	B07S1		1-03 *	H			1		P	HAND WIRE	114
BUS A17	L	B06S1		1-04 *	H			2		P	HAND WIRE	114
BUS A17	L	B05S1		1-05 *				1			TO HERE	114
BUS AC LO	L	B05F1		1-01 *	H			1		P	HAND WIRE	115
BUS AC LO	L	B06F1		1-02 *	H			2		P	HAND WIRE	115
BUS AC LO	L	B07F1		1-03 *	H			1		P	HAND WIRE	115
BUS AC LO	L	B08F1		1-04 *	H			2		P	HAND WIRE	115

RUN NAME	A/P	PIN NAME	ORDER PIN	BAY - ORDER	Q	DRAW RV PG Y	X	E	REMARKS	LENGTH	EXCEPTIONS	RUN NUMBER
BUS AC LO	L	B09F1		1-05 *				1			TO HERE	115
BUS BBSY	L	A09P2		1-01 *	H			2		P	HAND WIRE	116
BUS BBSY	L	A08P2		1-02 *	H			1		P	HAND WIRE	116
BUS BBSY	L	A07P2		1-03 *	H			2		P	HAND WIRE	116
BUS BBSY	L	A06P2		1-04 *	H			1		P	HAND WIRE	116
BUS BBSY	L	A05P2		1-05 *				2			TO HERE	116
BUS BG 05	H	B06B1		1-01 *	H			2		P	HAND WIRE	118
BUS BG 05	H	B07B1		1-02 *	H			1		P	HAND WIRE	118
BUS BG 05	H	B08B1		1-03 *	H			2		P	HAND WIRE	118
BUS BG 05	H	B09B1		1-04 *				1			TO HERE	118
BUS BG 4	H	B06E2		1-01 *	H			2		P	HAND WIRE	120
BUS BG 4	H	B07E2		1-02 *	H			1		P	HAND WIRE	120
BUS BG 4	H	B08E2		1-03 *	H			2		P	HAND WIRE	120
BUS BG 4	H	B09E2		1-04 *				1			TO HERE	120
BUS BG 6	H	B06A1		1-01 *	H			2		P	HAND WIRE	123
BUS BG 6	H	B07A1		1-02 *	H			1		P	HAND WIRE	123
BUS BG 6	H	B08A1		1-03 *	H			2		P	HAND WIRE	123
BUS BG 6	H	B09A1		1-04 *				1			TO HERE	123
BUS BG 7	H	A06V1		1-01 *	H			2		P	HAND WIRE	126
BUS BG 7	H	A07V1		1-02 *	H			1		P	HAND WIRE	126
BUS BG 7	H	A08V1		1-03 *	H			2		P	HAND WIRE	126
BUS BG 7	H	A09V1		1-04 *				1			TO HERE	126
BUS BR 4	L	B05D2		1-01 *	H			1		P	HAND WIRE	129
BUS BR 4	L	B06D2		1-02 *	H			2		P	HAND WIRE	129
BUS BR 4	L	B07D2		1-03 *	H			1		P	HAND WIRE	129
BUS BR 4	L	B08D2		1-04 *	H			2		P	HAND WIRE	129
BUS BR 4	L	B09D2		1-05 *				1			TO HERE	129
BUS BR 5	L	B05C1		1-01 *	H			1		P	HAND WIRE	130
BUS BR 5	L	B06C1		1-02 *	H			2		P	TO HERE	130
BUS BR 5	L	B07C1		1-03 *	H			1		P	HAND WIRE	130
BUS BR 5	L	B08C1		1-04 *	H			2		P	HAND WIRE	130
BUS BR 5	L	B09C1		1-05 *				1			TO HERE	130
BUS BR 6	L	A05U2		1-01 *	H			1		P	HAND WIRE	131
BUS BR 6	L	A06U2		1-02 *	H			2		P	HAND WIRE	131
BUS BR 6	L	A07U2		1-03 *	H			1		P	HAND WIRE	131
BUS BR 6	L	A08U2		1-04 *	H			2		P	HAND WIRE	131
BUS BR 6	L	A09U2		1-05 *				1			TO HERE	131
BUS BR 7	L	A05T2		1-01 *	H			1		P	HAND WIRE	132
BUS BR 7	L	A06T2		1-02 *	H			2		P	HAND WIRE	132
BUS BR 7	L	A07T2		1-03 *	H			1		P	HAND WIRE	132
BUS BR 7	L	A08T2		1-04 *	H			2		P	HAND WIRE	132
BUS BR 7	L	A09T2		1-05 *				1			TO HERE	132
BUS C0	L	B05U2		1-01 *	H			1		P	HAND WIRE	133
BUS C0	L	B06U2		1-02 *	H			2		P	HAND WIRE	133
BUS C0	L	B07U2		1-03 *	H			1		P	HAND WIRE	133
BUS C0	L	B08U2		1-04 *	H			2		P	HAND WIRE	133
BUS C0	L	B09U2		1-05 *				1			TO HERE	133
BUS C1	L	B05T2		1-01 *	H			2		P	HAND WIRE	134
BUS C1	L	B06T2		1-02 *	H			1		P	HAND WIRE	134
BUS C1	L	B07T2		1-03 *	H			2		P	HAND WIRE	134
BUS C1	L	B08T2		1-04 *	H			1		P	HAND WIRE	134
BUS C1	L	B09T2		1-05 *				2			TO HERE	134
BUS D00	L	A05C1		1-03 *	H			2		P	HAND WIRE	135

ERROR LISTING

GT40,B HND288,V17(17) 06/22/72 1=MAR=73 6152 PAGE 8

RUN NAME	A/P	PIN NAME	ORDER PIN	BAY - ORDER	Q	DRAW RV PG	Y	X	Z	REMARKS	LENGTH	EXCEPTIONS	RUN NUMBER
BUS D00	L	A06C1		1-04 *	H				1		P	HAND WIRE	135
BUS D00	L	A07C1		1-05 *	H				2		P	HAND WIRE	135
BUS D00	L	A08C1		1-06 *	H				1		P	HAND WIRE	135
BUS D00	L	A09C1		1-07 *								TO HERE	135
BUS D01	L	A09D2		1-01 *	H				1		P	HAND WIRE	136
BUS D01	L	A08D2		1-02 *	H				2		P	HAND WIRE	136
BUS D01	L	A07D2		1-03 *	H				1		P	HAND WIRE	136
BUS D01	L	A06D2		1-04 *	H				2		P	HAND WIRE	136
BUS D01	L	A05D2		1-05 *					1			TO HERE	136
BUS D02	L	A09D1		1-01 *	H				1		P	HAND WIRE	137
BUS D02	L	A08D1		1-02 *	H				2		P	HAND WIRE	137
BUS D02	L	A07D1		1-03 *	H				1		P	HAND WIRE	137
BUS D02	L	A06D1		1-04 *	H				2		P	HAND WIRE	137
BUS D02	L	A05D1		1-05 *					1			TO HERE	137
BUS D03	L	A09E2		1-01 *	H				1		P	HAND WIRE	138
BUS D03	L	A08E2		1-02 *	H				2		P	HAND WIRE	138
BUS D03	L	A07E2		1-03 *	H				1		P	HAND WIRE	138
BUS D03	L	A06E2		1-04 *	H				2		P	HAND WIRE	138
BUS D03	L	A05E2		1-05 *					1			TO HERE	138
BUS D04	L	A09E1		1-01 *	H				1		P	HAND WIRE	139
BUS D04	L	A08E1		1-02 *	H				2		P	HAND WIRE	139
BUS D04	L	A07E1		1-03 *	H				1		P	HAND WIRE	139
BUS D04	L	A06E1		1-04 *	H				2		P	HAND WIRE	139
BUS D04	L	A05E1		1-05 *					1			TO HERE	139
BUS D05	L	A09F2		1-01 *	H				1		P	HAND WIRE	140
BUS D05	L	A08F2		1-02 *	H				2		P	HAND WIRE	140
BUS D05	L	A07F2		1-03 *	H				1		P	HAND WIRE	140
BUS D05	L	A06F2		1-04 *	H				2		P	HAND WIRE	140
BUS D05	L	A05F2		1-05 *					1			TO HERE	140
BUS D06	L	A09F1		1-01 *	H				1		P	HAND WIRE	141
BUS D06	L	A08F1		1-02 *	H				2		P	HAND WIRE	141
BUS D06	L	A07F1		1-03 *	H				1		P	HAND WIRE	141
BUS D06	L	A06F1		1-04 *	H				2		P	HAND WIRE	141
BUS D06	L	A05F1		1-05 *					1			TO HERE	141
BUS D07	L	A09H2		1-01 *	H				1		P	HAND WIRE	142
BUS D07	L	A08H2		1-02 *	H				2		P	HAND WIRE	142
BUS D07	L	A07H2		1-03 *	H				1		P	HAND WIRE	142
BUS D07	L	A06H2		1-04 *	H				2		P	HAND WIRE	142
BUS D07	L	A05H2		1-05 *					1			TO HERE	142
BUS D08	L	A09H1		1-01 *	H				1		P	HAND WIRE	143
BUS D08	L	A08H1		1-02 *	H				2		P	HAND WIRE	143
BUS D08	L	A07H1		1-03 *	H				1		P	HAND WIRE	143
BUS D08	L	A06H1		1-04 *	H				2		P	HAND WIRE	143
BUS D08	L	A05H1		1-05 *					1			TO HERE	143
BUS D09	L	A09J2		1-01 *	H				1		P	HAND WIRE	144
BUS D09	L	A08J2		1-02 *	H				2		P	HAND WIRE	144
BUS D09	L	A07J2		1-03 *	H				1		P	HAND WIRE	144
BUS D09	L	A06J2		1-04 *	H				2		P	HAND WIRE	144
BUS D09	L	A05J2		1-05 *					1			TO HERE	144
BUS D10	L	A09J1		1-01 *	H				1		P	HAND WIRE	145
BUS D10	L	A08J1		1-02 *	H				2		P	HAND WIRE	145
BUS D10	L	A07J1		1-03 *	H				1		P	HAND WIRE	145
BUS D10	L	A06J1		1-04 *	H				2		P	HAND WIRE	145

ERROR LISTING

GT40,B HND288,V17(17) 06/22/72 1=MAR=73 6152 PAGE 9

RUN NAME	A/P	PIN NAME	ORDER PIN	BAY - ORDER	Q	DRAW RV PG	Y	X	Z	REMARKS	LENGTH	EXCEPTIONS	RUN NUMBER
BUS D10	L	A05J1		1-05 *					1			TO HERE	145
BUS D11	L	A09K2		1-01 *	H				1		P	HAND WIRE	146
BUS D11	L	A08K2		1-02 *	H				2		P	HAND WIRE	146
BUS D11	L	A07K2		1-03 *	H				1		P	HAND WIRE	146
BUS D11	L	A06K2		1-04 *	H				2		P	HAND WIRE	146
BUS D11	L	A05K2		1-05 *					1			TO HERE	146
BUS D12	L	A09K1		1-01 *	H				1		P	HAND WIRE	147
BUS D12	L	A08K1		1-02 *	H				2		P	HAND WIRE	147
BUS D12	L	A07K1		1-03 *	H				1		P	HAND WIRE	147
BUS D12	L	A06K1		1-04 *	H				2		P	HAND WIRE	147
BUS D12	L	A05K1		1-05 *					1			TO HERE	147
BUS D13	L	A09L2		1-01 *	H				2		P	HAND WIRE	148
BUS D13	L	A08L2		1-02 *	H				1		P	HAND WIRE	148
BUS D13	L	A07L2		1-03 *	H				2		P	HAND WIRE	148
BUS D13	L	A06L2		1-04 *	H				1		P	HAND WIRE	148
BUS D13	L	A05L2		1-05 *					2			TO HERE	148
BUS D14	L	A09L1		1-01 *	H				1		P	HAND WIRE	149
BUS D14	L	A08L1		1-02 *	H				2		P	HAND WIRE	149
BUS D14	L	A07L1		1-03 *	H				1		P	HAND WIRE	149
BUS D14	L	A06L1		1-04 *	H				2		P	HAND WIRE	149
BUS D14	L	A05L1		1-05 *					1			TO HERE	149
BUS D15	L	A09M2		1-01 *	H				2		P	HAND WIRE	150
BUS D15	L	A08M2		1-02 *	H				1		P	HAND WIRE	150
BUS D15	L	A07M2		1-03 *	H				2		P	HAND WIRE	150
BUS D15	L	A06M2		1-04 *	H				1		P	HAND WIRE	150
BUS D15	L	A05M2		1-05 *					2			TO HERE	150
BUS DC LO	L	B09F2		1-01 *	H				2		P	HAND WIRE	151
BUS DC LO	L	B08F2		1-02 *	H				1		P	HAND WIRE	151
BUS DC LO	L	B07F2		1-03 *	H				2		P	HAND WIRE	151
BUS DC LO	L	B06F2		1-04 *	H				1		P	HAND WIRE	151
BUS DC LO	L	B05F2		1-05 *					2			TO HERE	151
BUS INIT	L	A09A1		1-01 *	H				1		P	HAND WIRE	152
BUS INIT	L	A08A1		1-02 *	H				2		P	HAND WIRE	152
BUS INIT	L	A07A1		1-03 *	H				1		P	HAND WIRE	152
BUS INIT	L	A06A1		1-04 *	H				2		P	HAND WIRE	152
BUS INIT	L	A05A1		1-05 *					1			TO HERE	152
BUS INTR	L	A09B1		1-01 *	H				1		P	HAND WIRE	153
BUS INTR	L	A08B1		1-02 *	H				2		P	HAND WIRE	153
BUS INTR	L	A07B1		1-03 *	H				1		P	HAND WIRE	153
BUS INTR	L	A06B1		1-04 *	H				2		P	HAND WIRE	153
BUS INTR	L	A05B1		1-05 *					1			TO HERE	153
BUS MSYN	L	B05V1		1-02 *	H				1		P	HAND WIRE	154
BUS MSYN	L	B06V1		1-03 *	H				2		P	HAND WIRE	154
BUS MSYN	L	B07V1		1-04 *	H				1		P	HAND WIRE	154
BUS MSYN	L	B08V1		1-05 *	H				2		P	HAND WIRE	154
BUS MSYN	L	B09V1		1-06 *					1			TO HERE	154
BUS NPG IN	H	A06U1		1-01 *	H				2		P	HAND WIRE	155
BUS NPG IN	H	A07U1		1-02 *	H				1		P	HAND WIRE	155
BUS NPG IN	H	A08U1		1-03 *	H				2		P	HAND WIRE	155
BUS NPG IN	H	A09U1		1-04 *					1			TO HERE	155
BUS NPR	L	A06S2		1-01 *	H				1		P	HAND WIRE	157
BUS NPR	L	A07S2		1-02 *	H				2		P	HAND WIRE	157
BUS NPR	L	A08S2		1-03 *	H				1		P	HAND WIRE	157

RUN NAME	A/P	PIN NAME	ORDER PIN	BAY - ORDER	Q	DRAW	RV	PG	Y	X	Z	REMARKS	LENGTH	EXCEPTIONS	RUN NUMBER
BUS NPR	L	A09S2		1-04 *							2			TO HERE	157
BUS PA	L	A09M1		1-01 *	H						1		P	HAND WIRE	159
BUS PA	L	A08M1		1-02 *	H						2		P	HAND WIRE	159
BUS PA	L	A07M1		1-03 *	H						1		P	HAND WIRE	159
BUS PA	L	A06M1		1-04 *	H						2		P	HAND WIRE	159
BUS PA	L	A05M1		1-05 *							1			TO HERE	159
BUS PB	L	A09N2		1-01 *	H						1		P	HAND WIRE	160
BUS PB	L	A08N2		1-02 *	H						2		P	HAND WIRE	160
BUS PB	L	A07N2		1-03 *	H						1		P	HAND WIRE	160
BUS PB	L	A06N2		1-04 *	H						2		P	HAND WIRE	160
BUS PB	L	A05N2		1-05 *							1			TO HERE	160
BUS SACK	L	A09R2		1-01 *	H						1		P	HAND WIRE	161
BUS SACK	L	A08R2		1-02 *	H						2		P	HAND WIRE	161
BUS SACK	L	A07R2		1-03 *	H						1		P	HAND WIRE	161
BUS SACK	L	A06R2		1-04 *	H						2		P	HAND WIRE	161
BUS SACK	L	A05R2		1-05 *							1			TO HERE	161
BUS SSYN	L	B09U1		1-01 *	H						2		P	HAND WIRE	162
BUS SSYN	L	B08U1		1-02 *	H						1		P	HAND WIRE	162
BUS SSYN	L	B07U1		1-03 *	*						2		P	TO HERE	162
CLK	H	D06B1		1-01 *	H						1		P	HAND WIRE	171
CLK	H	D07B1		1-02 *										TO HERE	171
CONF SPARE	L	E08A1												1-PIN RUN	214
CR1		C04R1												1-PIN RUN	238
DPH RDR ENB	L	F09K2												1-PIN RUN	294
DPH RE -15	L	F09R1												1-PIN RUN	295
DPH SO -15	L	F09J2												1-PIN RUN	296
DPH SER 0	H	D09F1												1-PIN RUN	297
DPH SER 0	L	F09E2												1-PIN RUN	298
DPH SER IN	L	F09N1												1-PIN RUN	299
DPH SI -15	L	F09P1												1-PIN RUN	300
F05A1		F05A1		1-01 *	H						1		P	HAND WIRE	307
F05A1		F06A1		1-02 *										TO HERE	307
F05B1		F05B1		1-01 *	H						1		P	HAND WIRE	308
F05B1		F06B1		1-02 *										TO HERE	308
F05U1		F05U1		1-01 *	H						1		P	HAND WIRE	309
F05U1		F06U1		1-02 *										TO HERE	309
F05V1		F05V1		1-01 *	H						1		P	HAND WIRE	310
F05V1		F06V1		1-02 *										TO HERE	310
FS CLK	L	F09H1												1-PIN RUN	311
FS CLK DISAB	L	F09H2												1-PIN RUN	312
FS SER IN	L	F09M1												1-PIN RUN	313
GM INTENSITY OUT	L	A01T2		1-01 *	H						1	TWISTED PAIR		HAND WIRE	317
GM INTENSITY OUT	L	B02L2		1-02 *	H									H TO WHERE	317
GND 01-03		A01C1		1-01 *	H						2		P	HAND WIRE	320
GND 01-03		A01T1		1-02 *	H						1		P	HAND WIRE	320
GND 01-03		A01C2		1-03 *	H						2		P	HAND WIRE	320
GND 01-03		A03C2	A02C2	1-04 *	H						1		P	HAND WIRE	320
GND 01-03		A02C2		1-05 *	H						2	24 AWG		HAND WIRE	320
GND 01-03		A03E2		1-06 *	H						1	24AWG		HAND WIRE	320
GND 01-03		C03B2		1-07 *	H						2	24AWG		HAND WIRE	320
GND 01-03		C03N2	A03T1	1-08 *	H						1	24AWG		HAND WIRE	320
GND 01-03		A03T1	B03B2	1-09 *	H						2	24 AWG		HAND WIRE	320
GND 01-03		B03B2		1-10 *	H						1		P	HAND WIRE	320

RUN NAME	A/P	PIN NAME	ORDER PIN	BAY - ORDER	Q	DRAW	RV	PG	Y	X	Z	REMARKS	LENGTH	EXCEPTIONS	RUN NUMBER
GND 01-03		B03C2		1-11 *	H						2		P	HAND WIRE	320
GND 01-03		B02C2		1-12 *	H						1		P	HAND WIRE	320
GND 01-03		B01C2		1-13 *	H						2		P	HAND WIRE	320
GND 01-03		A02T1		1-14 *	H						1		P	HAND WIRE	320
GND 01-03		B02T1		1-15 *	H						2		P	HAND WIRE	320
GND 01-03		B01T1		1-16 *	H						1		P	HAND WIRE	320
GND 01-03		B03T1		1-17 *	H						2		P	HAND WIRE	320
GND 01-03		C03C2		1-18 *	H						1		P	HAND WIRE	320
GND 01-03		C02C2		1-19 *	H						2		P	HAND WIRE	320
GND 01-03		C01C2		1-20 *	H						1		P	HAND WIRE	320
GND 01-03		C01T1		1-21 *	H						2		P	HAND WIRE	320
GND 01-03		C02T1		1-22 *	H						1		P	HAND WIRE	320
GND 01-03		C03T1		1-23 *	H						2		P	HAND WIRE	320
GND 01-03		D03C2		1-24 *	H						1		P	HAND WIRE	320
GND 01-03		D02C2		1-25 *	H						2		P	HAND WIRE	320
GND 01-03		D01C2		1-26 *	H						1		P	HAND WIRE	320
GND 01-03		D01T1		1-27 *	H						2		P	HAND WIRE	320
GND 01-03		D02T1		1-28 *	H						1		P	HAND WIRE	320
GND 01-03		D03T1		1-29 *	H						2		P	HAND WIRE	320
GND 01-03		E03T1		1-30 *	H						1		P	HAND WIRE	320
GND 01-03		E02T1		1-31 *	H						2		P	HAND WIRE	320
GND 01-03		E01T1		1-32 *	H						1		P	HAND WIRE	320
GND 01-03		F01C2		1-33 *	H						2		P	HAND WIRE	320
GND 01-03		F02C2		1-34 *	H						1		P	HAND WIRE	320
GND 01-03		F03C2		1-35 *	H						2		P	HAND WIRE	320
GND 01-03		F03T1		1-36 *	H						1		P	HAND WIRE	320
GND 01-03		F02T1		1-37 *	H						2		P	HAND WIRE	320
GND 01-03		F01T1		1-38 *	H						1		P	HAND WIRE	320
GND 01-03		E01C2		1-39 *	H						2		P	HAND WIRE	320
GND 01-03		E02C2		1-40 *	H						1		P	HAND WIRE	320
GND 01-03		E03C2		1-41 *	H						2		P	HAND WIRE	320
GND 01-03		E04A1		1-42 *	H						1		P	HAND WIRE	320
GND 01-03		E04C2		1-43 *	H						2		P	HAND WIRE	320
GND 01-03		F04T1		1-44 *	H								P	H TO WHERE	320
GND 04-06		A06B2		1-01 *	H						2		P	HAND WIRE	321
GND 04-06		A06C2		1-02 *	H						1		P	HAND WIRE	321
GND 04-06		A05B2		1-03 *	H						2		P	HAND WIRE	321
GND 04-06		A05C2		1-04 *	H						1		P	HAND WIRE	321
GND 04-06		A04C2		1-05 *	H						2		P	HAND WIRE	321
GND 04-06		A05T1		1-06 *	H						1		P	HAND WIRE	321
GND 04-06		A05S1		1-07 *	H						2		P	HAND WIRE	321
GND 04-06		A05R1		1-08 *	H						1		P	HAND WIRE	321
GND 04-06		A05P1		1-09 *	H						2		P	HAND WIRE	321
GND 04-06		A05N1		1-10 *	H						1		P	HAND WIRE	321
GND 04-06		A06P1		1-11 *	H						2		P	HAND WIRE	321
GND 04-06		A06N1		1-12 *	H						1		P	HAND WIRE	321
GND 04-06		A06R1		1-13 *	H						2		P	HAND WIRE	321
GND 04-06		A06S1		1-14 *	H						1		P	HAND WIRE	321
GND 04-06		A06V2		1-15 *	H						2		P	HAND WIRE	321
GND 04-06		A06T1		1-16 *	H						1		P	HAND WIRE	321
GND 04-06		A05V2		1-17 *	H						2		P	HAND WIRE	321
GND 04-06		B05B2		1-18 *	H						1		P	HAND WIRE	321
GND 04-06		B05C2		1-19 *	H						2		P	HAND WIRE	321

ERROR LISTING

RUN NAME	A/P	PIN NAME	ORDER PIN	BAY - ORDER	Q	DRAW	RV	PG	Y	X	±	REMARKS	LENGTH	EXCEPTIONS	RUN NUMBER
GND 04-06		B04C2		1-20 *	H						1		P	HAND WIRE	321
GND 04-06		B05E1		1-21 *	H						2		P	HAND WIRE	321
GND 04-06		B05D1		1-22 *	H						1		P	HAND WIRE	321
GND 04-06		B06E1		1-23 *	H						2		P	HAND WIRE	321
GND 04-06		B06D1		1-24 *	H						1		P	HAND WIRE	321
GND 04-06		B06C2		1-25 *	H						2		P	HAND WIRE	321
GND 04-06		B06B2		1-26 *	H						1		P	HAND WIRE	321
GND 04-06		B06V2		1-27 *	H						2		P	HAND WIRE	321
GND 04-06		B06T1		1-28 *	H						1		P	HAND WIRE	321
GND 04-06		B05V2		1-29 *	H						2		P	HAND WIRE	321
GND 04-06		B05T1		1-30 *	H						1		P	HAND WIRE	321
GND 04-06		B04T1		1-31 *	H						2		P	HAND WIRE	321
GND 04-06		C04C2		1-32 *	H						1		P	HAND WIRE	321
GND 04-06		C05C2		1-33 *	H						2		P	HAND WIRE	321
GND 04-06		C06C2		1-34 *	H						1		P	HAND WIRE	321
GND 04-06		C06T1		1-35 *	H						2		P	HAND WIRE	321
GND 04-06		C05T1		1-36 *	H						1		P	HAND WIRE	321
GND 04-06		C04T1		1-37 *	H						2		P	HAND WIRE	321
GND 04-06		D04C2		1-38 *	H						1		P	HAND WIRE	321
GND 04-06		D05C2		1-39 *	H						2		P	HAND WIRE	321
GND 04-06		D06C2		1-40 *	H						1		P	HAND WIRE	321
GND 04-06		D06T1		1-41 *	H						2		P	HAND WIRE	321
GND 04-06		D05T1		1-42 *	H						1		P	HAND WIRE	321
GND 04-06		D04T1		1-43 *	H						2		P	HAND WIRE	321
GND 04-06		E05C2		1-44 *	H						1		P	HAND WIRE	321
GND 04-06		E06C2		1-45 *	H						2		P	HAND WIRE	321
GND 04-06		E06T1		1-46 *	H						1		P	HAND WIRE	321
GND 04-06		E05T1		1-47 *	H						2		P	HAND WIRE	321
GND 04-06		E04T1		1-48 *	H						1		P	HAND WIRE	321
GND 04-06		F04C2		1-49 *	H						2		P	HAND WIRE	321
GND 04-06		F05C2		1-50 *	H						1		P	HAND WIRE	321
GND 04-06		F06C2		1-51 *	H						2		P	HAND WIRE	321
GND 04-06		F04J2		1-52 *	H						1		P	HAND WIRE	321
GND 04-06		F05T1		1-53 *	H						2		P	HAND WIRE	321
GND 04-06		F06T1		1-54 *	H								P	H TO WHERE	321
GND 07-09		A09B2		1-01 *	H						1		P	HAND WIRE	322
GND 07-09		A09C2		1-02 *	H						2		P	HAND WIRE	322
GND 07-09		A08B2		1-03 *	H						1		P	HAND WIRE	322
GND 07-09		A08C2		1-04 *	H						2		P	HAND WIRE	322
GND 07-09		A07B2		1-05 *	*						1		P	TO HERE	322
GND 07-09		A07C2		1-06 *	H						2		P	HAND WIRE	322
GND 07-09		A07N1		1-07 *	H						1		P	HAND WIRE	322
GND 07-09		A07P1		1-08 *	H						2		P	HAND WIRE	322
GND 07-09		A07R1		1-09 *	H						1		P	HAND WIRE	322
GND 07-09		A07S1		1-10 *	H						2		P	HAND WIRE	322
GND 07-09		A07T1		1-11 *	H						1		P	HAND WIRE	322
GND 07-09		A07V2		1-12 *	H						2		P	HAND WIRE	322
GND 07-09		A08T1		1-13 *	H						1		P	HAND WIRE	322
GND 07-09		A08S1		1-14 *	H						2		P	HAND WIRE	322
GND 07-09		A08R1		1-15 *	H						1		P	HAND WIRE	322
GND 07-09		A08P1		1-16 *	H						2		P	HAND WIRE	322
GND 07-09		A08N1		1-17 *	H						1		P	HAND WIRE	322
GND 07-09		A09P1		1-18 *	H						2		P	HAND WIRE	322

ERROR LISTING

RUN NAME	A/P	PIN NAME	ORDER PIN	BAY - ORDER	Q	DRAW	RV	PG	Y	X	±	REMARKS	LENGTH	EXCEPTIONS	RUN NUMBER
GND 07-09		A09N1		1-19 *	H						1		P	HAND WIRE	322
GND 07-09		A09R1		1-20 *	H						2		P	HAND WIRE	322
GND 07-09		A09S1		1-21 *	H						1		P	HAND WIRE	322
GND 07-09		A09V2		1-22 *	H						2		P	HAND WIRE	322
GND 07-09		A09T1		1-23 *	H						1		P	HAND WIRE	322
GND 07-09		A08V2		1-24 *	H						2		P	HAND WIRE	322
GND 07-09		B08B2		1-25 *	H						1		P	HAND WIRE	322
GND 07-09		B08C2		1-26 *	H						2		P	HAND WIRE	322
GND 07-09		B07B2		1-27 *	H						1		P	HAND WIRE	322
GND 07-09		B07E1		1-28 *	H						2		P	HAND WIRE	322
GND 07-09		B07D1		1-29 *	H						1		P	HAND WIRE	322
GND 07-09		B07C2		1-30 *	H						2		P	HAND WIRE	322
GND 07-09		B08E1		1-31 *	*						1		P	TO HERE	322
GND 07-09		B08D1		1-32 *	H						2		P	HAND WIRE	322
GND 07-09		B09E1		1-33 *	H						1		P	HAND WIRE	322
GND 07-09		B09D1		1-34 *	H						2		P	HAND WIRE	322
GND 07-09		B09C2		1-35 *	H						1		P	HAND WIRE	322
GND 07-09		B09B2		1-36 *	H						2		P	HAND WIRE	322
GND 07-09		B09V2		1-37 *	H						1		P	HAND WIRE	322
GND 07-09		B09T1		1-38 *	H						2		P	HAND WIRE	322
GND 07-09		B08V2		1-39 *	H						1		P	HAND WIRE	322
GND 07-09		B08T1		1-40 *	H						2		P	HAND WIRE	322
GND 07-09		B07V2		1-41 *	H						1		P	HAND WIRE	322
GND 07-09		B07T1		1-42 *	H						2		P	HAND WIRE	322
GND 07-09		C07C2		1-43 *	H						1		P	HAND WIRE	322
GND 07-09		C08C2		1-44 *	H						2		P	HAND WIRE	322
GND 07-09		C09C2		1-45 *	H						1		P	HAND WIRE	322
GND 07-09		C09T1		1-46 *	H						2		P	HAND WIRE	322
GND 07-09		C08T1		1-47 *	H						1		P	HAND WIRE	322
GND 07-09		C07T1		1-48 *	H						2		P	HAND WIRE	322
GND 07-09		D07C2		1-49 *	H						1		P	HAND WIRE	322
GND 07-09		D08C2		1-50 *	H						2		P	HAND WIRE	322
GND 07-09		D09C2		1-51 *	H						1		P	HAND WIRE	322
GND 07-09		D09T1		1-52 *	H						2		P	HAND WIRE	322
GND 07-09		D08T1		1-53 *	H						1		P	HAND WIRE	322
GND 07-09		D07T1		1-54 *	H						2		P	HAND WIRE	322
GND 07-09		E07C2		1-55 *	H						1		P	HAND WIRE	322
GND 07-09		E08C2		1-56 *	H						2		P	HAND WIRE	322

RUN NAME	A/P	PIN NAME	ORDER PIN	BAY - ORDER	Q	DRAW RV PG Y	X	Z	REMARKS	LENGTH	EXCEPTIONS	RUN NUMBER
P0 IN		D06E2		1-02 *	H			1		P	HAND WIRE	338
P0 IN		D07E2		1-03 *							TO HERE	338
P0 SA		D05F1		1-01 *	H			2		P	HAND WIRE	339
P0 SA		D06F1		1-02 *	H			1		P	HAND WIRE	339
P0 SA		D07F1		1-03 *							TO HERE	339
P0 SB		D05F2		1-01 *	H			2		P	HAND WIRE	340
P0 SB		D06F2		1-02 *	H			1		P	HAND WIRE	340
P0 SB		D07F2		1-03 *							TO HERE	340
P1 IN		D05E1		1-01 *	H			2		P	HAND WIRE	341
P1 IN		D06E1		1-02 *	H			1		P	HAND WIRE	341
P1 IN		D07E1		1-03 *							TO HERE	341
P1 SA		D05D1		1-01 *	H			2		P	HAND WIRE	342
P1 SA		D06D1		1-02 *	H			1		P	HAND WIRE	342
P1 SA		D07D1		1-03 *							TO HERE	342
P1 SB		D05D2		1-01 *	H			2		P	HAND WIRE	343
P1 SB		D06D2		1-02 *	H			1		P	HAND WIRE	343
P1 SB		D07D2		1-03 *							TO HERE	343
PCC ANALOG CLOCK	H	F01R1		1-01 *	H			1	IWISTED PAIR		HAND WIRE	344
PCC ANALOG CLOCK	H	F03U1		1-02 *	H						H TO WHERE	344
PCC DIS CLK	H	C02F2		1-01 *	H			1	IWISTED PAIR		HAND WIRE	350
PCC DIS CLK	H	D03N2		1-02 *							TO HERE	350
READ	H	C06U2		1-01 *	H			1		P	HAND WIRE	404
READ	H	C07U2		1-02 *							TO HERE	404
RES 1		E05C1		1-01 *	H			1		P	HAND WIRE	405
RES 1		E06C1		1-02 *							TO HERE	405
RES 2		E05B1		1-01 *	H			1		P	HAND WIRE	406
RES 2		E06B1		1-02 *							TO HERE	406
SABR CHAR SCALE (1)	H	R02M1						2			1-PIN RUN	407
THERM 1		E05A1		1-01 *	H			1		P	HAND WIRE	449
THERM 1		E06A1		1-02 *							TO HERE	449
TNAR	H	C06V2		1-01 *	H			1		P	HAND WIRE	450
TNAR	H	C07V2		1-02 *							TO HERE	450
TWID	H	C06V1		1-01 *	H			1		P	HAND WIRE	451
TWID	H	C07V1		1-02 *							TO HERE	451
VR ANALOG +15V		A01D2									1-PIN RUN	468
VR ANALOG -15V		A01E2									1-PIN RUN	469
XNWD0		F05K2		1-01 *	H			1		P	HAND WIRE	471
XNWD0		F06K2		1-02 *							TO HERE	471
XNWD1		F05L2		1-01 *	H			1		P	HAND WIRE	472
XNWD1		F06L2		1-02 *							TO HERE	472
XNWD2		F05M2		1-01 *	H			1		P	HAND WIRE	473
XNWD2		F06M2		1-02 *							TO HERE	473
XNWD3		F05N2		1-01 *	H			1		P	HAND WIRE	474
XNWD3		F06N2		1-02 *							TO HERE	474
XNWD4		F05P2		1-01 *	H			1		P	HAND WIRE	475
XNWD4		F06P2		1-02 *							TO HERE	475
XNWD5		F05R2		1-01 *	H			1		P	HAND WIRE	476
XNWD5		F06R2		1-02 *							TO HERE	476
XNWD6		F05S2		1-01 *	H			1		P	HAND WIRE	477
XNWD6		F06S2		1-02 *							TO HERE	477
XNWD7		F05T2		1-01 *	H			1		P	HAND WIRE	478
XNWD7		F06T2		1-02 *							TO HERE	478
XPRD0		F05L1		1-01 *	H			1		P	HAND WIRE	479

RUN NAME	A/P	PIN NAME	ORDER PIN	BAY - ORDER	Q	DRAW RV PG Y	X	Z	REMARKS	LENGTH	EXCEPTIONS	RUN NUMBER
XPRD0		F06L1		1-02 *							TO HERE	479
XPRD1		F05M1		1-01 *	H			1		P	HAND WIRE	480
XPRD1		F06M1		1-02 *							TO HERE	480
XPRD2		F05N1		1-01 *	H			1		P	HAND WIRE	481
XPRD2		F06N1		1-02 *							TO HERE	481
XPRD3		F05P1		1-01 *	H			1		P	HAND WIRE	482
XPRD3		F06P1		1-02 *							TO HERE	482
XPRD4		F05R1		1-01 *	H			1		P	HAND WIRE	483
XPRD4		F06R1		1-02 *							TO HERE	483
XPRD5		F05S1		1-01 *	H			1		P	HAND WIRE	484
XPRD5		F06S1		1-02 *							TO HERE	484
XPRD6		F05U2		1-01 *	H			1		P	HAND WIRE	485
XPRD6		F06U2		1-02 *							TO HERE	485
XPRD7		F05V2		1-01 *	H			1		P	HAND WIRE	486
XPRD7		F06V2		1-02 *							TO HERE	486
XS 00		C05R2		1-01 *	H			1		P	HAND WIRE	487
XS 00		C06R2		1-02 *							TO HERE	487
XS 01		C05S1		1-01 *	H			1		P	HAND WIRE	488
XS 01		C06S1		1-02 *							TO HERE	488
XS 02		C05S2		1-01 *	H			1		P	HAND WIRE	489
XS 02		C06S2		1-02 *							TO HERE	489
XS 03		C05T2		1-01 *	H			1		P	HAND WIRE	490
XS 03		C06T2		1-02 *							TO HERE	490
XS 04		F05C1		1-01 *	H			1		P	HAND WIRE	491
XS 04		F06C1		1-02 *							TO HERE	491
XS 05		F05D1		1-01 *	H			1		P	HAND WIRE	492
XS 05		F06D1		1-02 *							TO HERE	492
XS 06		F05D2		1-01 *	H			1		P	HAND WIRE	493
XS 06		F06D2		1-02 *							TO HERE	493
XS 07		F05E1		1-01 *	H			1		P	HAND WIRE	494
XS 07		F06E1		1-02 *							TO HERE	494
XS 08		F05E2		1-01 *	H			1		P	HAND WIRE	495
XS 08		F06E2		1-02 *							TO HERE	495
XS 09		F05F1		1-01 *	H			1		P	HAND WIRE	496
XS 09		F06F1		1-02 *							TO HERE	496
XS 10		F05F2		1-01 *	H			1		P	HAND WIRE	497
XS 10		F06F2		1-02 *							TO HERE	497
XS 11		F05H1		1-01 *	H			1		P	HAND WIRE	498
XS 11		F06H1		1-02 *							TO HERE	498
XS 12		F05H2		1-01 *	H			1		P	HAND WIRE	499
XS 12		F06H2		1-02 *							TO HERE	499
XS 13		F05J1		1-01 *	H			1		P	HAND WIRE	500
XS 13		F06J1		1-02 *							TO HERE	500
XS 14		F05J2		1-01 *	H			1		P	HAND WIRE	501
XS 14		F06J2		1-02 *							TO HERE	501
XS 15		F05K1		1-01 *	H			1		P	HAND WIRE	502
XS 15		F06K1		1-02 *							TO HERE	502
YNWD0		C05B1		1-01 *	H			1		P	HAND WIRE	503
YNWD0		C06B1		1-02 *							TO HERE	503
YNWD1		C05D2		1-01 *	H			1		P	HAND WIRE	504
YNWD1		C06D2		1-02 *							TO HERE	504
YNWD2		C05E2		1-01 *	H			1		P	HAND WIRE	505
YNWD2		C06E2		1-02 *							TO HERE	505

ERROR LISTING

G140,B
RUN NAME

HND288,V17(17) 06/22/72

1-MAR=73

A/P	PIN NAME	ORDER PIN	BAY - ORDER	Q	DRAW RV PG Y	X	#	REMARKS	LENGTH	6152 EXCEPTIONS	RUN NUMBER
	YNWD3		C05F2	1-01 *	H		1		P	HAND WIRE	506
	YNWD3		C06F2	1-02 *						TO HERE	506
	YNWD4		C05H2	1-01 *	H		1		P	HAND WIRE	507
	YNWD4		C06H2	1-02 *						TO HERE	507
	YNWD5		C05J2	1-01 *	H		1		P	HAND WIRE	508
	YNWD5		C06J2	1-02 *						TO HERE	508
	YNWD6		C05K2	1-01 *	H		1		P	HAND WIRE	509
	YNWD6		C06K2	1-02 *						TO HERE	509
	YNWD7		C05L2	1-01 *	H		1		P	HAND WIRE	510
	YNWD7		C06L2	1-02 *						TO HERE	510
	YPRD0		C05A1	1-01 *	H		1		P	HAND WIRE	511
	YPRD0		C06A1	1-02 *						TO HERE	511
	YPRD1		C05C1	1-01 *	H		1		P	HAND WIRE	512
	YPRD1		C06C1	1-02 *						TO HERE	512
	YPRD2		C05D1	1-01 *	H		1		P	HAND WIRE	513
	YPRD2		C06D1	1-02 *						TO HERE	513
	YPRD3		C05E1	1-01 *	H		1		P	HAND WIRE	514
	YPRD3		C06E1	1-02 *						TO HERE	514
	YPRD4		C05F1	1-01 *	H		1		P	HAND WIRE	515
	YPRD4		C06F1	1-02 *						TO HERE	515
	YPRD5		C05H1	1-01 *	H		1		P	HAND WIRE	516
	YPRD5		C06H1	1-02 *						TO HERE	516
	YPRD6		C05J1	1-01 *	H		1		P	HAND WIRE	517
	YPRD6		C06J1	1-02 *						TO HERE	517
	YPRD7		C05K1	1-01 *	H		1		P	HAND WIRE	518
	YPRD7		C06K1	1-02 *						TO HERE	518
	YS 00		C05L1	1-01 *	H		1		P	HAND WIRE	519
	YS 00		C06L1	1-02 *						TO HERE	519
	YS 01		C05M1	1-01 *	H		1		P	HAND WIRE	520
	YS 01		C06M1	1-02 *						TO HERE	520
	YS 02		C05M2	1-01 *	H		1		P	HAND WIRE	521
	YS 02		C06M2	1-02 *						TO HERE	521
	YS 03		C05N1	1-01 *	H		1		P	HAND WIRE	522
	YS 03		C06N1	1-02 *						TO HERE	522
	YS 04		C05N2	1-01 *	H		1		P	HAND WIRE	523
	YS 04		C06N2	1-02 *						TO HERE	523
	YS 05		C05P1	1-01 *	H		1		P	HAND WIRE	524
	YS 05		C06P1	1-02 *						TO HERE	524
	YS 06		C05P2	1-01 *	H		1		P	HAND WIRE	525
	YS 06		C06P2	1-02 *						TO HERE	525
	YS 07		C05R1	1-01 *	H		1		P	HAND WIRE	526
	YS 07		C06R1	1-02 *						TO HERE	526

This drawing and specifications, herein, are the property of Digital Equipment Corporation and shall not be reproduced or copied or used in whole or in part as the basis for the manufacture or sale of items without written permission 1972

WIRE TABLE

ITEM NO	DESCRIPTION PAIR #	COLOR	FROM CONNECTION	WITH ITEM	TO CONNECTION	WITH ITEM	CUT POINT	SIGNAL NAME	
6	1	RED	P1-2	12 SOLD	P3-R	3	7A	INT Φ	
		BLK	P1-3	12 SOLD	P3-T		9A	INT 1	
		DRAIN	SEE NOTE #3	12	P3-S		8A	GND	
	2	WHT	P1-4	12 SOLD	P3-JJ		17A	Z INPUT	
		BLK	P1-5	12 SOLD	P3-HH		16A	GND	
		DRAIN	SEE NOTE #3	12	P3-KK		18A	GND	
	3	GRN	P1-7	12 SOLD	P3-J		4A	-X INPUT	
		BLK	P1-8	12 SOLD	P3-L	3	5A	+X INPUT	
		DRAIN	P1-9	12,9 SOLD	P3-M	3,9	6A	GND	— SEE NOTE 6
	4	BLU	P1-10	12 SOLD	P3-B	3	1A	-Y INPUT	
		BLK	P1-11	12 SOLD	P3-D	3	2A	+Y INPUT	
		DRAIN	P1-12	12,9 SOLD	P3-E	3,9	3A	GND	— SEE NOTE 6
	5	YEL	P1-15	12 SOLD	P3-FF	3	15A	SPEAKER	
		BLK	P1-16	12 SOLD	P3-V		10A	COLOR RED	
		DRAIN	SEE NOTE #3	12	P3-W		11A	GND	
	6	BRN	P1-17	12 SOLD	P4-K		3B	+KB SIG	
		BLK	P1-18	12 SOLD	P4-S		4B	-KB SIG	
		DRAIN	SEE NOTE #3	12	P4-A		1B	GND	
	7	ORN	P1-19	12 SOLD	P3-X		12A	LIGHT PEN	
		BLK	P1-20	12 SOLD	P4-TT		6B	+5V IN	
		DRAIN	SEE NOTE #3	12	P3-Y		13A	GND	
	8	WHT	P1-1	12 SOLD	P3-DD		14A	INT 2	
		RED	P1-22	12 SOLD	P3-LL		19A	+22 V	
		DRAIN	SEE NOTE #3	12	P3-PP		21A	GND	
	9	GRN	P1-23	12 SOLD	P3-NN		20A	H.O. GND	
		RED	P1-24	12 SOLD	P3-RR		22A	-22 V	
		DRAIN	SEE NOTE #3	12	P3-UU		23A	GND	
7	1	RED	P2-1	5	P4-U		5B	REMOTE	
		BLK	P2-2	5	P4-B		2B	GND	
		DRAIN	P2-3	5	P4-UU	3	7B	GND	

LEGEND

NUMBER	VARIATION DIM."V"	DIM."W"(PRECUT)	DIM."X"	DIM."Y"(PRECUT)
7008993-3F	4FT.11IN.±1IN.	5FT.0IN.±1IN.	3FT.6IN.±1IN.	4FT2IN.±1IN.
7008993-5	6FT.5IN.±2IN.	6FT.6IN.±2IN.	5FT.0IN.±1IN.	5FT.8IN.±1IN.
7008993-10	11FT.5IN.±3IN.	11FT.6IN.±3IN.	10FT.0IN.±2IN.	10FT.8IN.±2IN
7008993-15	16FT.5IN.±3IN.	16FT.6IN.±3IN.	15FT.0IN.±3IN.	15FT.8IN.±3IN.
7008993-20	21FT.5IN.±3IN.	21FT.6IN.±3IN.	20FT.0IN.±3IN.	20FT.8IN.±3IN

NOTES:

1. CLEAR TEFLON TUBING (ITEM #12) TO BE USED ON ALL P1 PINS (ITEM #1).
2. MANUFACTURING SHOULD USE MACHINE CRIMPER. TOOL FOR CRIMPING PINS (ITEM #3) MUST BE HTGG/HTG8 FROM BERG OR EQUIV.
3. DRAINS FROM PAIR #1,2,5,6,7,8 & 9 ARE TO BE TIED TOGETHER AND ONE LEAD SOLDERED TO P1-6, SEE DETAIL 'C'.
4. ALL EXPOSED DRAIN WIRES TO HAVE CLEAR TUBING (ITEM #10) ADDED BEFORE SOLDERING.
5. TWP #6 AND BLK WIRE OF TWP #7, FROM P3, ARE TO BE SEPARATED FROM CABLE AND BROUGHT TO P4 AT POINT SHOWN, WIRES ARE TO BE TWISTED TOGETER.
6. AFTER CUTTING MYLAR FOIL BACK, COVER CUT END WITH ITEM # 9.

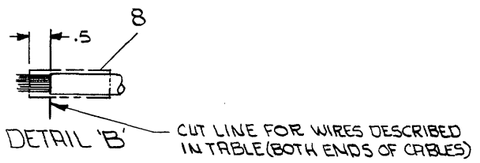

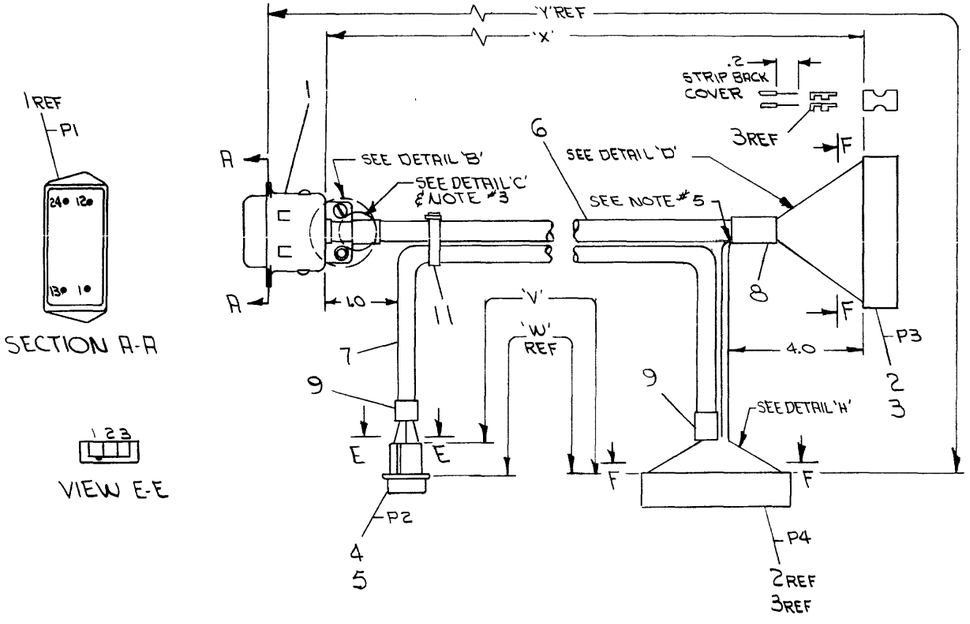

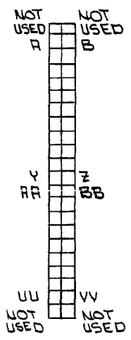

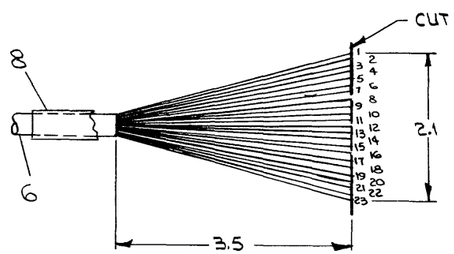

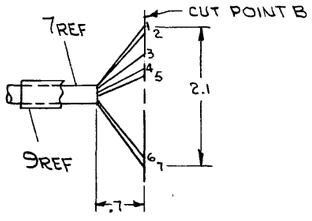

DETAIL "H"

DO NOT REDUCE
FOR MANUFACTURING PURPOSES ONLY

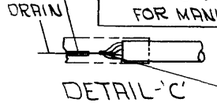

DO NOT REDUCE
FOR MANUFACTURING PURPOSES ONLY

	QTY.	DESCRIPTION	PART NO.	ITEM NO.
		PARTS LIST		
A/R		TUBING, TEFLON #12 CLR	9107301-10	12
A/R		TIE WRAP #SST-2M PANDUIT	9007032	11
A/R		TUBING, TEFLON #18 (CLEAR)	9107278-10	10
A/R		TUBING, RED SHRINK 1/4 I.D	9107253-02	9
A/R		TUBING, BLK SHRINK 3/4 O.D.	9107250-00	8
A/R		CABLE #8451 BELDEN	9107703	7
A/R		CABLE, 18 COND. #8774 BELDEN	9107687	6
3		TERMINAL PIN CONTACT	1209378-03	5
1		HOUSING #1-480305-0 WATER-LOCK	1209351-03	4
30		PIN, BERG #48015	12100089-4	3
2		CONN/W RET ROD BERG	12100090-0	2
1		CONN 24 PIN #37-50240 AMP	1203466	1

FIRST USED ON OPTION/MODEL	
GT40	

UNLESS OTHERWISE SPECIFIED DIMENSION IN INCHES. TOLERANCES

DECIMALS	ANGLES
.XXX = .005 .XX = .02 .X = .1	±0° 30'

REMOVE BURRS AND BREAK SHARP CORNERS SURFACE QUALITY ✓

MATERIAL: SEE PARTS LIST

FINISH: #

	NAME	DATE
DRN	P.J. LeBlanc	6/14/72
CHK'D	F. Balagh	7-11-72
ENG	M. Fitz	8/1/72
PROJ ENG	M. Fitz	8/1/72
PROD		

digital EQUIPMENT CORPORATION MAYNARD MASSACHUSETTS

TITLE: SCOPE CABLE

NEXT HIGHER ASSY: D-UA-GT40-0-0

SCALE: NONE

SHEET | OF

SIZE	CODE	NUMBER	REV.
D	IA	7008993-0-0	B

DIST.

REVISIONS				
CHK	CHANGE NO	REV		
PM	GT40-00003	A	FILZ	11-27-72
PM	GT40-00005	B	FILZ	1-2-73

INING 40-107 15968

FC FORM NO 3100-A

digital EQUIPMENT CORPORATION MAYNARD MASSACHUSETTS

DRAWING DIRECTORY

CUSTOMER PRINT SET INDEX

THIS IS PRINT SET

SEQUENCE

PRINT SET #1

DRAWING DIRECTORY	B-DD-DL11-Ø
ASYNCHRONOUS LINE INTERFACE	C-UA-DL11-Ø-Ø
ASYNCHRONOUS LINE INTERFACE (PL)	A-PL-DL11-Ø-Ø
ASYNCHRONOUS LINE INTERFACE	E-CS-M78ØØ-YA-1
CABLE ASSEMBLY (KL8/E)	D-1A-7008360-Ø-Ø
SOFTWARE LIST	A-SL-DL11-Ø-4
ACCESSORY LIST	A-AL-DL11-Ø-5

PRINT SET #2

DRAWING DIRECTORY	B-DD-DL11-Ø
ASYNCHRONOUS LINE INTERFACE	C-UA-DL11-Ø-Ø
ASYNCHRONOUS LINE INTERFACE (PL)	A-PL-DL11-Ø-Ø
ASYNCHRONOUS LINE INTERFACE	E-CS-M78ØØ-Ø-1
CABLE, MODEM BCØ5C	D-UA-BCØ5C-Ø-Ø
FILTER NETWORK	B-CS-GSØØØ-Ø-1
MODEM TEST CONN	D-CS-H315-Ø-1
SOFTWARE LIST	A-SL-DL11-Ø-4
ACCESSORY LIST	A-AL-DL11-Ø-5

SEQUENCE

PRINT SET #3

DRAWING DIRECTORY	B-DD-DL11-0
ASYNCHRONOUS LINE INTERFACE	C-UA-DL11-0-0
ASYNCHRONOUS LINE INTERFACE (PL)	A-PL-DL11-0-0
ASYNCHRONOUS LINE INTERFACE	E-CS-M7800-0-1
CABLE, MODEM BC05C	D-UA-BC05C-0-0
CABLE ASSEMBLY (KL8/E)	D-1A-7008360-0-0
MODEM TEST CONN.	D-CS-H315-0-1

UNIT VARIATIONS

VARIATION	TITLE	PRINT SET TYPE DL11-1	DL11-2
DL11-A	ASYNC LINE INTERFACE, CURRENT LOOP	1	0
DL11-B	ASYNC LINE INTERFACE, EIA	0	1
DL11-C	ASYNC LINE INTERFACE, CURRENT LOOP	1	0
DL11-D	ASYNC LINE INTERFACE, EIA	0	1
DL11-E	ASYNC LINE INTERFACE, DATA SET	0	1

REVISIONS

DATE	CHG. NO.	REV
8/11	DL11-00001	A
	M. Pierce 7-18-72	
	P. JANSON	
	P.E. Jansen 7-17-72	
	DL11-00002	B
	M. Towne 11-30-72	
	P. JANSON	
	P.E. Jansen 12-5-72	
	DL11-00003	C
	Bracley 12-20-72	
	JANSON	
	P.E. Jansen 1-2-72	

USED ON OPTION/MODEL

		DATE
DRN.	M. Pierce	4-28-72
CHK'D.	R. Cook	5/9/72
PROJ ENG.	P.E. Jansen	5/11/72
PROD.	[illegible]	5-15-72
FIELD SERV.	[illegible]	5/15/72

SHEET 1 OF 3

TITLE: ASYNCHRONOUS LINE INTERFACE

SIZE	CODE	NUMBER	REV
B	DD	DL11-Ø	C

DIST G

DRB 106

DEC 16-(325)-1062-1-N871

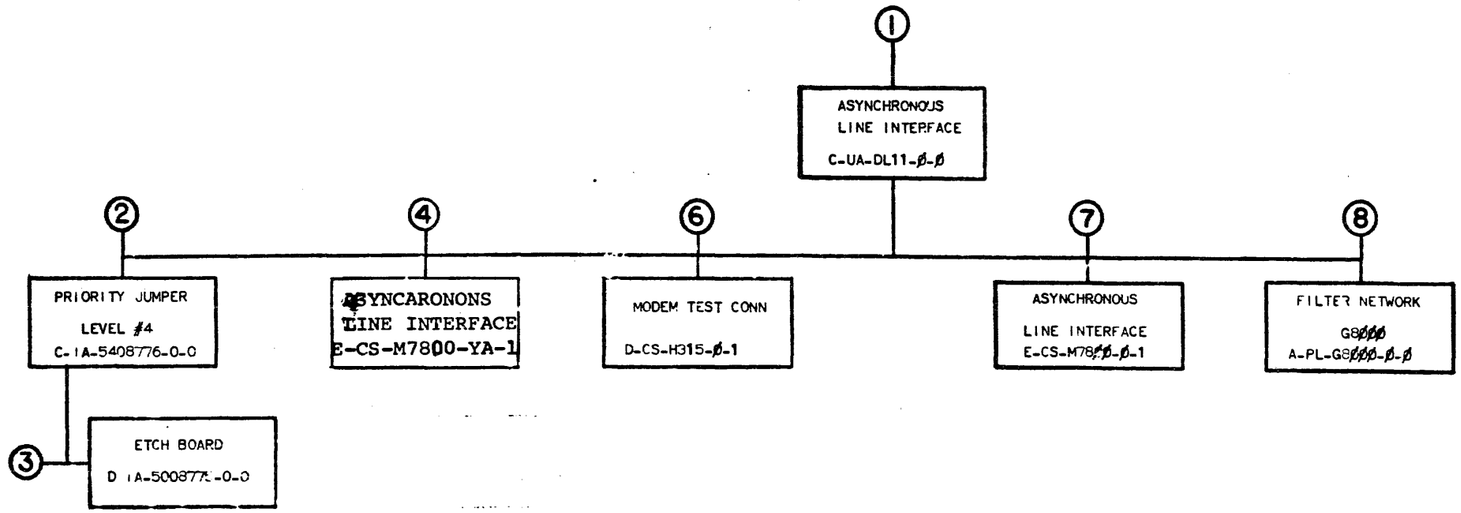

TITLE	SIZE	CODE	NUMBER	REV
ASYNCHRONOUS LINE INTERFACE — SHEET 2 OF 3	B	DD	DLII - Ø	C

DRB 107
DEC 16—(325)—1062—3—N871

CUSTOMER PRINT SET

DL11-1	DL11-2	DL11-3	DEPOT	FIND NO.	DRAWING NO.	REV	NO OF SHT	DESCRIPTION	OPTION NO.
X	X	X		1.	C-UA-DL11-Ø-Ø	B	1	ASYNCHRONOUS LINE INTERFACE	
X	X	X			A-PL-DL11-Ø-Ø	B	1	ASYNCHRONOUS LINE INTERFACE (PL)	
	X	X			D-UA-BCØ5C-Ø-Ø	#	1	CABEE, MODEM, BCØ5C	
X		X			D-IA-7008360-0-0	#	1	CABLE, ASSEMBLY (KL8/E)	
					A-SP-DL11-Ø-1	*	11	ENGINEERING SPECIFICATION	
					A-SP-DL11-Ø-2	*	8	INSTALLATION PROCEDURE	
					A-SP-DL11-Ø-3	Δ	7	TEST PROCEDURE	
X	X				A-SL-DL11-Ø-4	*	1	SOFTWARE LIST	
X	X				A-AL-DL11-Ø-5	Δ	1	ACCESSORY LIST	
				2.	C-IA-3408776-0-0		1	PRIORITY JUMPER LEVEL #4	
					B-CS-5408776-0-1		1	CIRCUIT SCHEMATIC	
					K-CO-5408776-0-4		1	X-Y COORDINATE HOLE LOC	
					B-MH-5408776-0-6		1	MODULE ECO HISTORY	
				3.	C-AH-5408776-0-5		1	ASSY/DRILLING HOLE LAYOUT	
X				4	E-CS-M7800-YA-1	#	6	ASYNCHRONOUS LINE INTERFACE	
					K-CO-M7800-YA-4		1	X-Y COORDINATE HOLE LOCATION	
					D-AH-M7800-YA-5		1	ASSY DRILLING HOLE LAYOUT	
					B-MH-M7800-YA-6		1	MODULE ECO HISTORY	
	X	X		6.	D-CS-H315-Ø-1	#	1	MODEM TEST CONN	
					K-CO-H315-Ø-4		1	X-Y COORDINATE HOLE LOC	
					D-AH-H315-Ø-5		1	ASSY DRILLING HOLE LAYOUT	
					B-MH-H315-Ø-6		1	MODULE ECO HISTORY	
	X	X		7.	E-CS-M78ØØ-Ø-1	#	7	ASYNCHRONOUS LINE INTERFACE	
					K-CO-M78ØØ-Ø-4		1	X-Y COORDINATE HOLE LOC	
					D-AH-M78ØØ-Ø-5		1	ASSY/DRILLING HOLE LAYOUT	
					B-MH-M78ØØ-Ø-6		1	MODULE ECO HISTORY	
				8.	A-PL-G8ØØ-Ø-Ø		1	FILTER NETWORK	
	X				B-CS-G8ØØ-Ø-1	#	1	CIRCUIT SCHEMATIC	
					K-CO-G8ØØ-Ø-4		1	X-Y COORDINATE HOLE LOC	
					C-AH-G8ØØ-Ø-5		1	ASSY/DRILLING HOLE LAYOUT	
					B-MH-G8ØØ-Ø-6		1	MODULE ECO HISTORY	

MECHANICAL PRINT SET

DL11-1	DL11-2	DL11-3	DEPOT	FIND NO.	DRAWING NO.	REV	NO OF SHT	DESCRIPTION	OPTION NO.
				1.	C-UA-DL11-Ø-Ø	B	1	ASYNCHRONOUS LINE INTERFACE	
					A-PL-DL11-Ø-Ø	B	1	ASYNCHRONOUS LINE INTERFACE (PL)	
					D-UA-BCØ5C-Ø-Ø		1	CABLE, MODEM BCØ5C	
					D-IA-7008360-0-0		1	CABLE ASSEMBLY (KL8/E)	
				2.	C-IA-5408776-0-0		1	PRIORITY JUMPER LEVEL #4	
					K-CO-5408776-0-4		1	X-Y COORDINATE HOLE LOC	
					B-MH-5408776-0-6		1	ASSY/DRILLING HOLE LAYOUT	
				3.	D-IA-5008775-0-0		1	ETCH BOARD	
					C-AH-5408776-0-5		1	ASSY/DRILLING HOLE LAYOUT	
				6.	D-CS-H315-Ø-1		1	MODEM TEST CONN	
					K-CO-H315-Ø-4		1	X-Y COORDINATE HOLE LOC	
					C-AH-H315-Ø-5		1	ASSY/DRILLING HOLE LAYOUT	
					B-MH-H315-Ø-6		1	MODULE ECO HISTORY	
				7.	E-CS-M78ØØ-Ø-1		7	ASYNCHRONOUS LINE INTERFACE	
					K-CO-M78ØØ-Ø-4		1	X-Y COORDINATE HOLE LOC	
					D-AH-M78ØØ-Ø-5		1	ASSY/DRILLING HOLE LAYOUT	
					B-MH-M78ØØ-Ø-6		1	MODULE ECO HISTORY	
				8.	A-PL-G8ØØ-Ø-Ø		1	FILTER NETWORK	
					K-CO-G8ØØ-Ø-4		1	X-Y COORDINATE HOLE LOC	
					C-AH-G8ØØ-Ø-5		1	ASSY/DRILLING HOLE LAYOUT	
					B-MH-G8ØØ-Ø-6		1	MODULE ECO HISTORY	

TITLE	SHEET	SIZE	CODE	NUMBER	REV
ASYNCHRONOUS LINE INTERFACE	3 OF 3	B	DD	DL11-Ø	C

DRB 108

This drawing and specifications, herein, are the property of Digital Equipment Corporation and shall not be reproduced or copied or used in whole or in part as the basis for the manufacture or sale of items without written permission. 1972

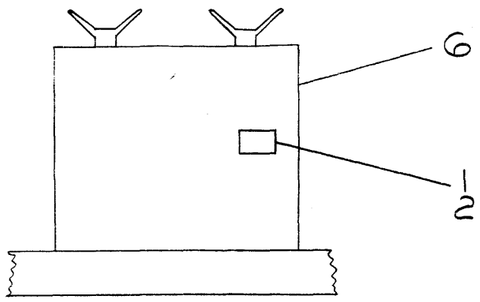

NOTES:

1. G 8000 IS REQUIRED ONLY IN PDP 11 SYSTEMS WHERE +15V IS NOT AVAILABLE. THE INSTALATION REQUIRES 2 WIRES TO BE ADDED.
   A03V2 - A02U2
   A02N2 - CXXU1
   WHERE (XX) IS THE SLOT NUMBER CONTAINING THE DL 11.
2. ITEMS INDICATED WITH ASTERICK (*) ARE SHOWN FOR REFERENCE ONLY AND ARE NOT PART OF THIS UNIT.

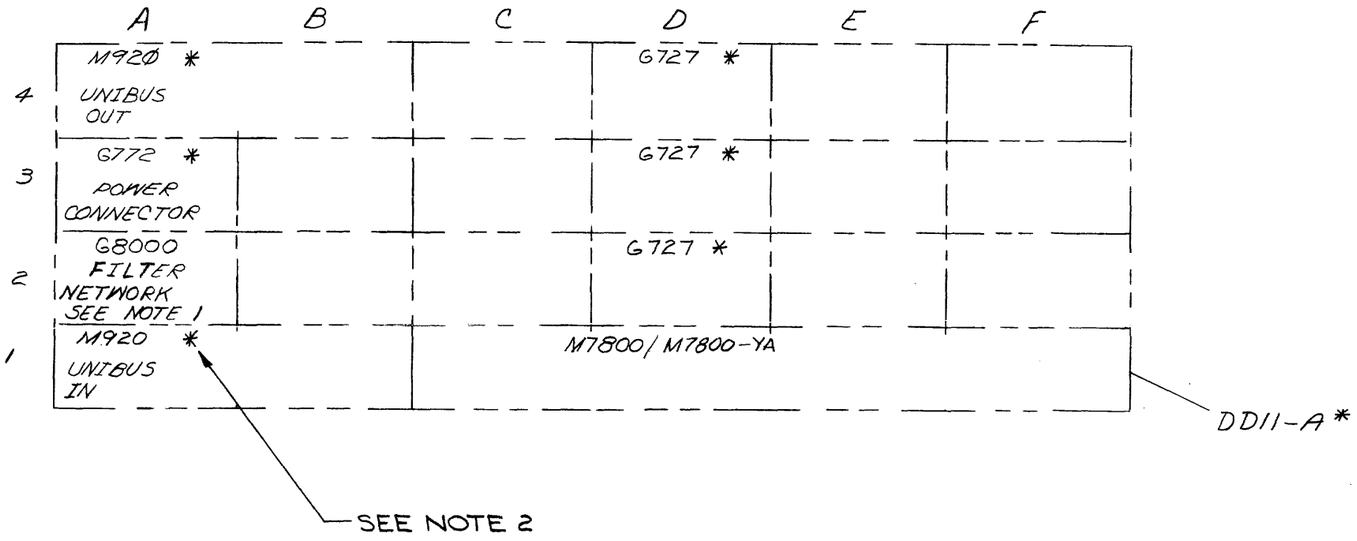

FIRST USED ON OPTION/MODEL	QTY.	DESCRIPTION	PART NO.	ITEM NO.
PDP-11		PARTS LIST		

UNLESS OTHERWISE SPECIFIED DIMENSION IN INCHES. TOLERANCES

DECIMALS	ANGLES
.XXX = .005 .XX = .02 .X = .1	±0° 30'

REMOVE BURRS AND BREAK SHARP CORNERS SURFACE QUALITY ✓

MATERIAL

FINISH

		DATE
DRN.	M. Pierce	2/18/72
CHK'D.	J. Ferguson	4-24-72
ENG.	P. E. Jansen	5-11-72
PROJ. ENG.	P. E. Jansen	5-11-72
PROD.	J. McIntyre	5-15-72

NEXT HIGHER ASSY. B-DD-DL11-Ø

SCALE NONE

SHEET OF

digital EQUIPMENT CORPORATION MAYNARD MASSACHUSETTS

TITLE ASYNCHRONOUS LINE INTERFACE

SIZE	CODE	NUMBER	REV.
C	UA	DL11-Ø-Ø	B

DIST. G

REVISIONS

CHK	CHANGE NO.	REV.
8 TM	DL11-00001	A
	M. Pierce 7-18-72	
	P. JANSON	
	P. E. Jansen 7-19-72	
8 TM	DL11-00002	B
	P. E. Jansen 11/30/72	
	JANSON	
	P. E. Jansen 12-5-72	

DEC FORM NO. DRC 100-A

DIGITAL EQUIPMENT CORPORATION
MAYNARD, MASSACHUSETTS

PARTS LIST

MADE BY M.PIERCE DATE 4/27/72	CHECKED J.FERGUSON DATE 4/27/72	SECTION 1
ENG P.E. Jamson DATE 5/11/72	PROD J. McGuire DATE 5/15/72	ISSUED SECT. 1

ITEM NO.	DWG NO./PART NO.	DESCRIPTION	QUANTITY/VARIATION DL11-A	DL11-B	DL11-C	DL11-D	DL11-E	
1	C-IA-5408776-0-0	PRIORITY JUMPER LEVEL #4	1	1	1	1	1	
~~2~~	~~C-IA-5408778-0-0~~	~~PRIORITY JUMPER LEVEL #5~~	~~-~~	~~-~~	~~-~~	~~-~~	~~1~~	
3	D-UA-BCØ5C-25	CABLE, MODEM BCØ5C	-	1	-	1	1	
4	D-IA-7008360-0-0	CABLE ASSEMBLY (KL8E)	1	-	1	-	-	
5	D-CS-H315-Ø-1	MODEM TEST CONNECTOR	-	-	-	-	A/R	See Note 2
6	E-CS-M7800-Ø-1	ASYNCHRONOUS LINE INTERFACE	-	1	-	1	1	
7	A-PL-G8ØØØ-Ø-Ø	FILTER NETWORK	-	A/R	-	A/R	A/R	See Note 1
8		CRYSTAL	A/R	A/R	A/R	A/R	A/R	See Note 3
9	E-CS-M7800-YA-1	ASYNCHRONOUS LINE INTERFACE	1	-	1	-	-	

NOTES:
1. G8000 IS REQUIRED ONLY IN PDP 11 SYSTEMS WHERE +15V IS NOT AVAILABLE. ONE PER DD11-A.
2. ONE H315 PER PDP11 SYSTEM
3. CRYSTAL FREQUENCY DEFINED BY CUSTOMER SPECIFIED BAUD RATE

TITLE	ASSY NO.	SIZE	CODE	NUMBER	REV.	ECO NO.
ASYNCHRONOUS LINE INTERFACE	C-UA-DL11-Ø-Ø	A	PL	DL11-Ø-Ø	B	DL11-00002
	SHEET 1 OF 1	DIST.	G			

DEC FORM DEC 10-(325)-1031-N870
DRA 110

This drawing and specification, hereon are the property of Digital Equipment Corporation and shall not be reproduced or copied or used in whole or in part as the basis for the manufacture or sale of items without written permission

NOTES:
1.) PIN NOTATION THROUGHOUT IS ORDERED UPON MODULE PLACEMENT IN THE SYSTEM UNIT MODULE REFERENCE ALONE IS OBTAINED BY CONVERTING THE FIRST LETTER ACCORDING TO THE PIN NOMENCLATURE CHART AT THE LEFT
2.) JUMPERS TO BE USED AT CONNECTIONS A3-A10, J1-J10 V3-V8, AND N1.
3.) LETTERS ENCLOSED IN PARENTHESIS REFER TO PINS ON THE BERG CONNECTOR. EXAMPLE: (X).

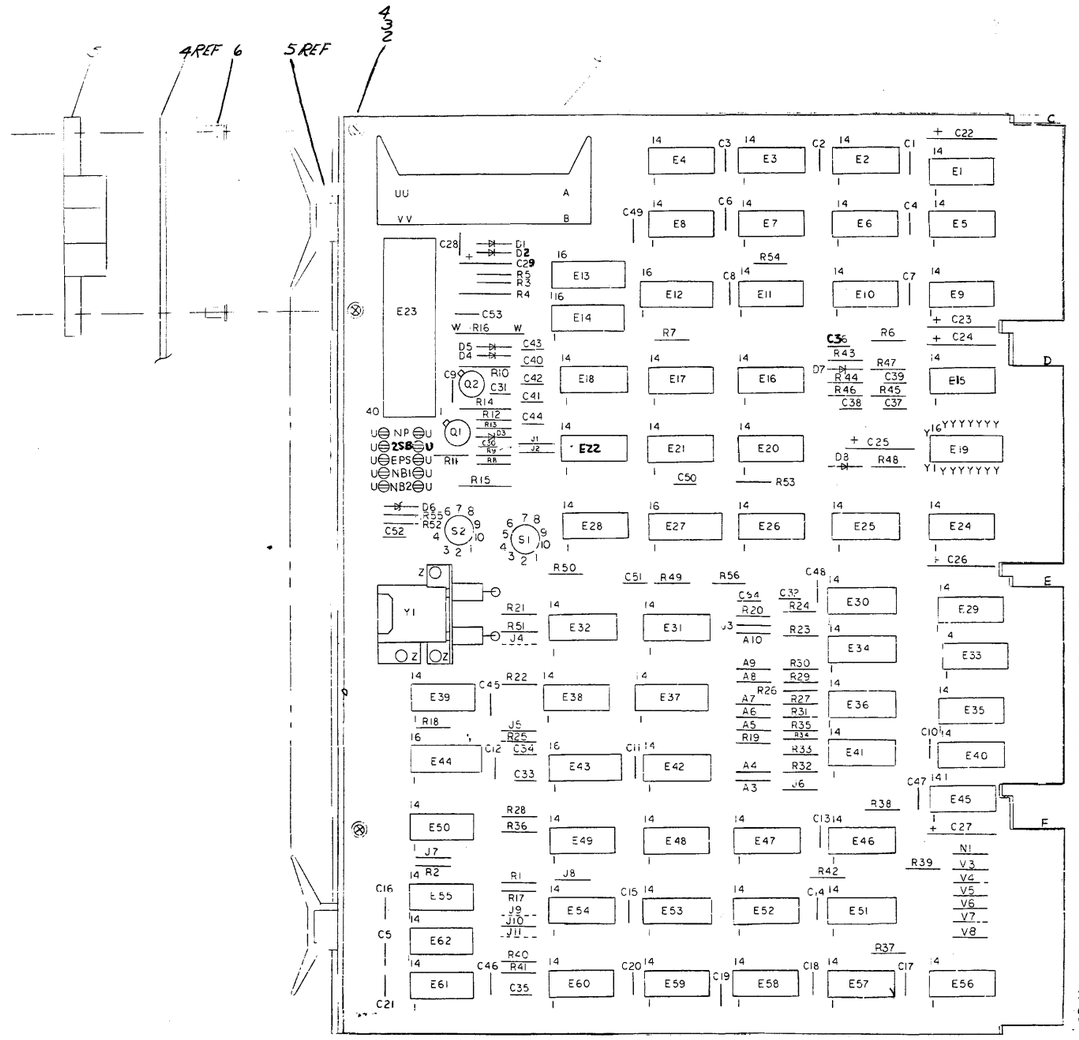

PIN NOMENCLATURE

MODULE	SYSTEM UNIT
A	C
B	D
C	E
D	F

1	E87	IC DEC 74161	1910650	70
3		NUT KEPS #2	9006555	69
3		SCR PHL PAN HD #2-56 X 1/4 LG	9006001-1	68
2		AUGAT 8000 PG-1	1202812	67
2	D1-D5, D7 D8	DIODE D664 20V 100MA	1100114	66
1	D6	DIODE 1N746A	1104860	65
2	Q1, Q2	TRANSISTOR 2N3904	1503409-00	64
1	C53	CAP 100PF 100V 5% MYLAR	1000016	63
1	C54	CAP 560PF 100V 5% MYLAR	1000025	62
2	C50, C51	CAP .047MF CERAMIC	1005278	61
1	C36	CAP 220PF 100V 5% DIPPED MICA	1000021	60
2	C34, C35	CAP 330PF 100V 5% DIPPED MICA	1000023	59
9	C32, C37-C44	CAP 390PF 100V 5% DIPPED MICA	1000024	58
1	C31	CAP 470PF 100V 5% DIPPED MICA	1000042	57
27	C1-C8, C28, C30, C45-C49, C52	CAP .01UF 100V 20% CERAMIC DISC	1004662	56
1	C29	CAP .47UF 35V 10% TANT	1003963	55
6	C22-C27	CAP 6.8 UF 35V 20% TANT	1000067	54
1	C33	CAP 5 PF 100V 5% DIPPED MICA	1000049	53
2	R14, R15	RES 1.5K 1/2 W 5%	1300396	52
6	R23, R26, R10, R28, R52, R53	RES 1K 1/4 W 5%	1300365	51
1	R41	RES 47 Ω 1/4 W 5%	1300202	50
1	R10	RES 68 Ω 1/2 W 10%	1300220	49
1	R5	RES 82 Ω 1/4 W 5%	1301477	48
4	R24, R45, R46, R47	RES 100 Ω 1/4 W 5%	1300359	47
1	R11	RES 150 Ω 1/4 W 5%	1300530	46
1	R42	RES 180 Ω 1/4 W 5%	1301322	45
2	R44, R53	RES 220 Ω 1/4 W 5%	1300271	44
1	R38	RES 330 Ω 1/4 W 5%	1300309	43
6	R9, R13, R43, R51	RES 470 Ω 1/4 W 5%	1300376	42
1	R4	RES 560 Ω 1/2 W 5%	1300338	41
1	R3	RES 750 Ω 1/4 W	1304401	40
1	R16	RES 750 Ω 1W 5%	1302385	39
27	R1, R2, R6, R7, R17-R22, R35, R37-R37, R39, R49, R50, R54, R56	RES 10K 1/4 W 5%	1300479	38
2	R8, R12	RES 1.5 K 1/4 W 5%	1300391	37
1	E28	IC DEC UART	1910439	36
4	E35, E55, E61, E62	IC DEC 7474	1903547	35
3	E15, E36, E41	IC DEC 8242	1909712	34
3	E34, E49, E59	IC DEC 7408	1910155	33
2	E18, E21	IC NO 1489	1910323	32
2	E20, E26	IC DEC 7490	1909037	31
11	E1, E2, E3, E7-E9, E11, E30, E47, E54, E56	IC DEC 8881	1909705	30
1	E22	IC NC1488	1910322	29
1	E48	IC DEC 74123	1904436	28
3	E40, E57, E58	IC DEC 74174	1909687	27
3	E42, E59, E38	IC DEC 7400	1903573	26
1	E10	IC DEC 7413	1909989	25
2	E50, E33	IC DEC 7402	1909004	24
8	E3, E9, E33, E35, E43, E45, E46, E28	IC DEC 380	1909685	23
1	E12	IC DEC 74153	1909137	22
1	E60	IC DEC 74H04	1909937	21
1	E25	IC DEC 7492	1909033	20
5	E6, E16, E17, E38, E39	IC DEC 7404	1909686	19
1	E24	IC DEC 7493	1909034	18
1	E34	IC DEC 7410	1903576	17
1	E29	IC DEC 374	1909704	16
1	E37	IC DEC 7442	1910046	15
1	E44	IC DEC 8271	1909645	14
2	E13, E14	IC DEC 74175	1910651	13
1		BRACKET, CRYSTAL HOLDER	5302823	12
1		BRACKET, CRYSTAL HOLDER	5303154	11
1	E19	SOCKET	1200125	10
2	S1, S2	SWITCH, SINGLE POLE, 10 POS	1210042-1	9
1		40 PIN CONNECTOR BERG	1201941	8
10		SPLIT LUGS	9007135	7
8		4 RIVET #0554-7 E.B. STIMPSON	9006732	6
4		HANDLE, FCTO-CNTR, MAGENTA	9008337-06	5
4		ETCHED CIRCUIT BOARD	3009978	4
REF		MODULE ECO HISTORY	B-M1-M7800-04	3
REF		ASSY/DRILLING HOLE LAYOUT	D-M1-M7800-01-SC	2
REF		X-Y COORDINATE HOLE	C-M1-M7800-01	1
QTY	REF DESIGNATION	DESCRIPTION	PART NO.	ITEM NO.

PARTS LIST

ETCH BOARD REV E

| | | | | |

This drawing and specifications, herein, are the property of Digital Equipment Corporation and shall not be reproduced or copied or used in whole or in part as the basis for the manufacture or sale of items without written permission.

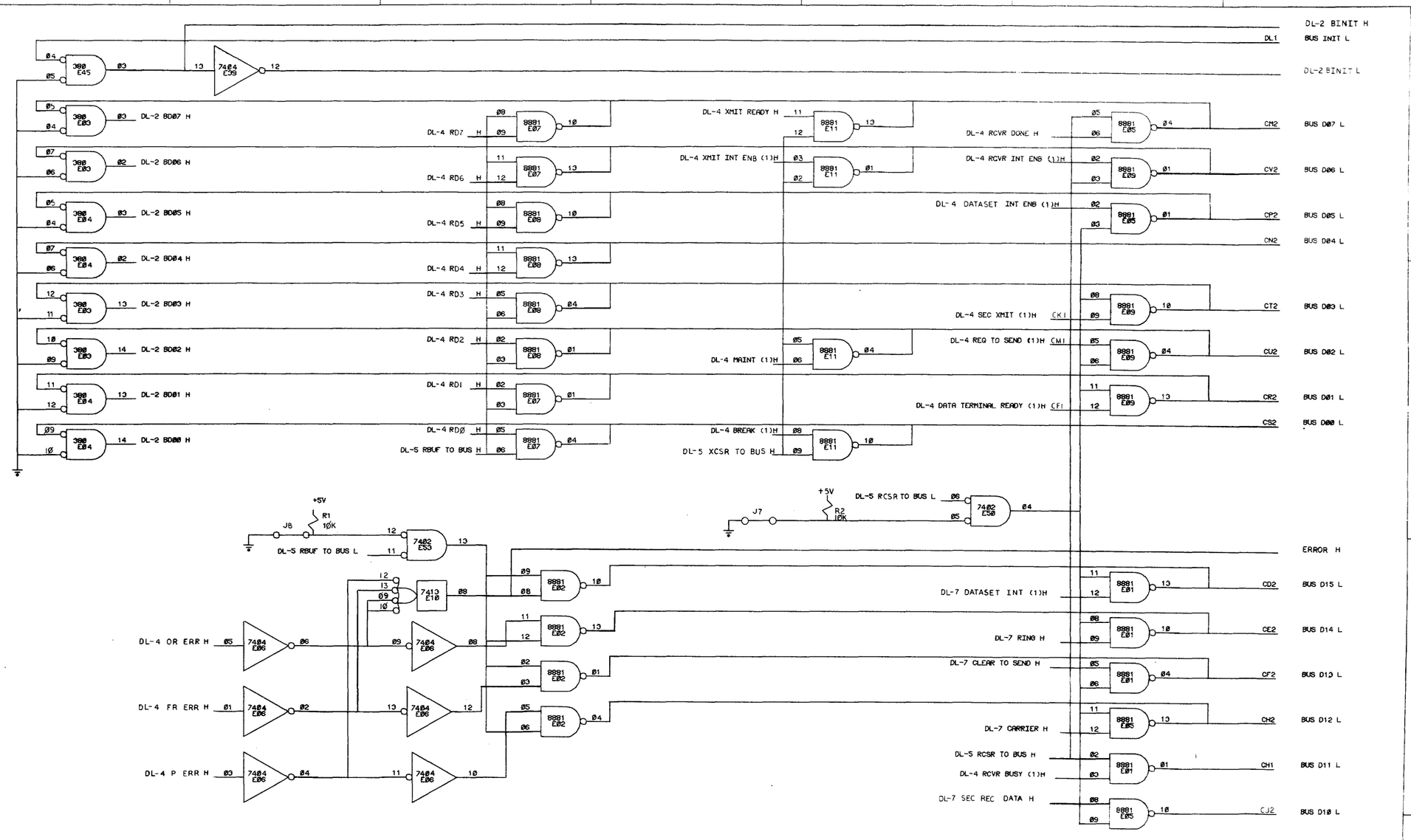

REVISIONS		
CHK.	CHANGE NO.	REV.

FIRST USED ON OPTION/MODEL	QTY.	DESCRIPTION	PART NO.	ITEM NO.
DL11	PARTS LIST			

UNLESS OTHERWISE SPECIFIED DIMENSION IN INCHES. TOLERANCES

DECIMALS	ANGLES
.XXX = .005 .XX = .02	±0° 30'

REMOVE BURRS AND BREAK SHARP CORNERS SURFACE QUALITY ✓

MATERIAL —/—

FINISH —/—

DRN. B. Pinder DATE 3-20-72
CHK'D. J. Ferguson DATE 4-5-72
ENG. Roy Gordon DATE 4/2/72
PROJ. ENG. P. E. Jonson DATE 4-27-72
PROD. J. Montoya DATE 4-27-72

NEXT HIGHER ASSY. —/—

SCALE —/—

SHEET 2 OF 7

digital EQUIPMENT CORPORATION MAYNARD MASSACHUSETTS

TITLE ASYNCHRONOUS LINE INTERFACE (BUS RECEIVERS & DRIVERS) DL-2

SIZE	CODE	NUMBER	REV.
D	CS	M7800-0-1	D

DIST.

This drawing and specifications, herein, are the property of Digital Equipment Corporation and shall not be reproduced or copied or used in whole or in part as the basis for the manufacture or sale of items without written permission.

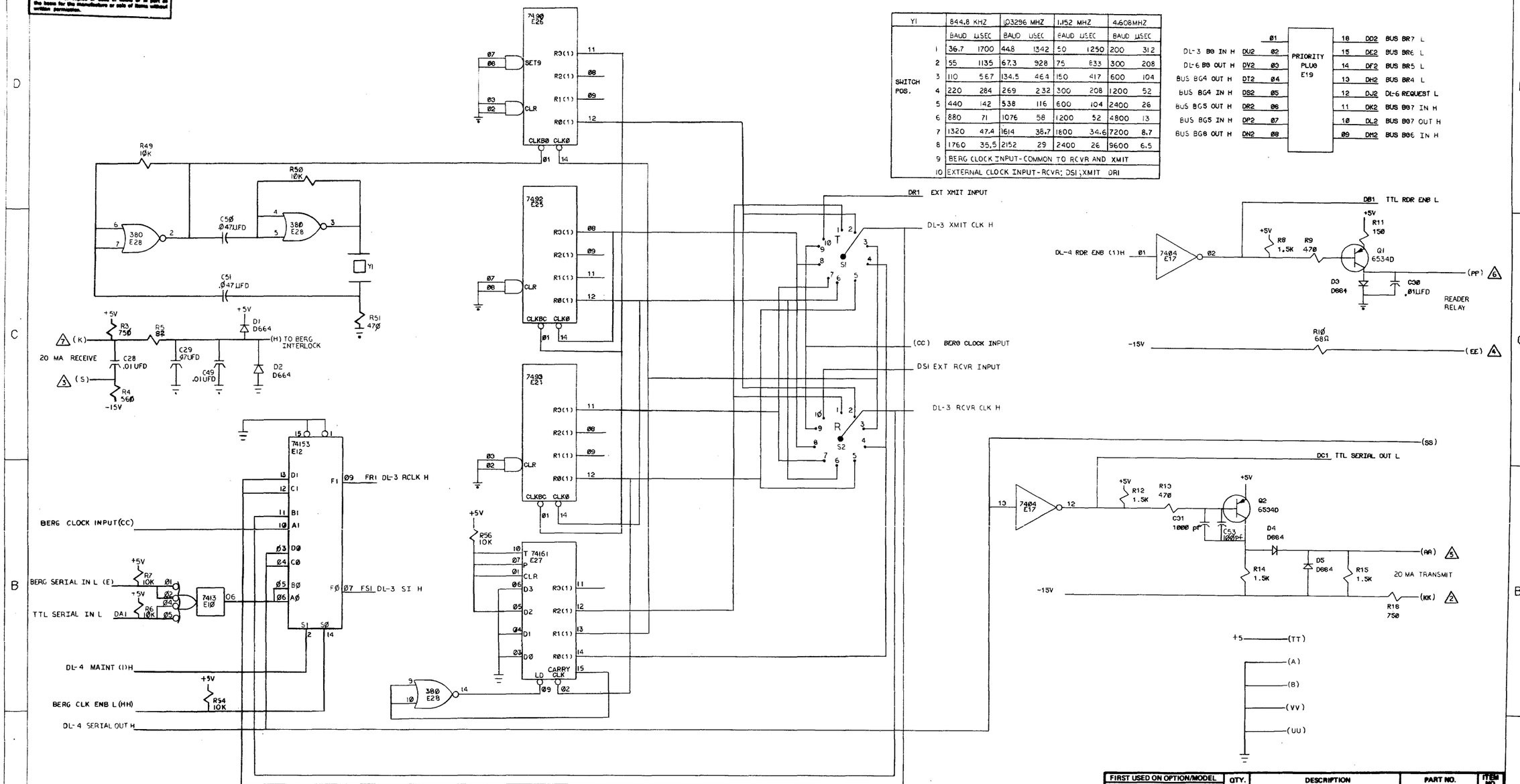

Y1	844.8 KHZ		103296 MHZ		1.152 MHZ		4.608MHZ	
	BAUD	µSEC	BAUD	µSEC	BAUD	µSEC	BAUD	µSEC
SWITCH POS. 1	36.7	1700	44.8	1342	50	1250	200	312
2	55	1135	67.3	928	75	833	300	208
3	110	567	134.5	464	150	417	600	104
4	220	284	269	232	300	208	1200	52
5	440	142	538	116	600	104	2400	26
6	880	71	1076	58	1200	52	4800	13
7	1320	47.4	1614	38.7	1800	34.6	7200	8.7
8	1760	35.5	2152	29	2400	26	9600	6.5
9	BERG CLOCK INPUT-COMMON TO RCVR AND XMIT							
10	EXTERNAL CLOCK INPUT-RCVR; DS1; XMIT DR1							

NOTES:
1. LETTERS ENCLOSED IN PARENTHESIS REFER TO PINS ON THE BERG CONNECTOR. EXAMPLE: (X)
2. NUMBERS WITHIN TRIANGLES REFER TO PINS ON THE FEMALE MATE-N-LOCK CONNECTOR WHEN USING THE 7008360 CABLE. THIS CABLE ALSO CONNECTS BERG PINS H TO E.

REVISIONS		
CHK.	CHANGE NO.	REV.

FIRST USED ON OPTION/MODEL	QTY.	DESCRIPTION	PART NO.	ITEM NO.
DL11		PARTS LIST		

UNLESS OTHERWISE SPECIFIED DIMENSION IN INCHES. TOLERANCES
DECIMALS .XXX = .005 .XX = .02 .X = .1
ANGLES ±0° 30'
REMOVE BURRS AND BREAK SHARP CORNERS SURFACE QUALITY ✓
MATERIAL
FINISH

DRN. B. Pinder DATE 3-20-72
CHK'D. DATE 4-5-72
ENG. DATE 4/27/72
PROJ. ENG. DATE 4-27-72
PROD. DATE 4-27-72
NEXT HIGHER ASSY.
SCALE
SHEET 3 OF 7

digital EQUIPMENT CORPORATION MAYNARD, MASSACHUSETTS

TITLE ASYNCHRONOUS LINE INTERFACE (CLOCK & CURRENT LOOPS) DL-3

SIZE	CODE	NUMBER	REV.
D	CS	M7800-0-1	D

DIST.

This drawing and specifications, herein, are the property of Digital Equipment Corporation and shall not be reproduced or copied or used in whole or in part as the basis for the manufacture or sale of items without written permission.

DL-2 BINT L

DL-5 SEL 2 L — 7408 E31

UART E23

DL-2 BD07 H
DL-2 BD06 H
DL-2 BD05 H
DL-2 BD04 H
DL-2 BD03 H
DL-2 BD02 H
DL-2 BD01 H
DL-2 BD00 H
DL-5 LD XD L
X CLK H

CLR R DONE
STB STATUS
STB RD
R CLK
SERIAL IN
XD7
XD6
XD5
XD4
XD3
XD2
XD1
XD0
LD XD
X CLK
CLR LDC NB2 NB1 NP EP 2SB

R DONE
OR ERR — DL-4 OR ERR H
FR ERR — DL-4 FR ERR H
P ERR — DL-4 P ERR H
RD7 — DL-4 RD7 H
RD6 — DL-4 RD6 H
RD5 — DL-4 RD5 H
RD4 — DL-4 RD4 H
RD3 — DL-4 RD3 H
RD2 — DL-4 RD2 H
RD1 — DL-4 RD1 H
RD0 — DL-4 RD0 H
SERIAL OUT
XRDY
EOC

7404 E38 — 7408 E31 — 7474 E62

74175 E14
DL-2 BD02 H — DL-4 MAINT (1)H
DL-2 BD00 H
DL-2 BD06 H
DL-2 BD04 H
R3(1) R3(0) R2(1) R2(0) R1(1) R1(0) R0(1) R0(0)
CLR CLK — DL-5 BUS TO XCSR H

7404 E39 — DL-4 BREAK (1)H
+5V R18 10K J5 — DL-4 BREAK (0)H
DL-4 XMIT INT ENB (1)H

DL-4 XMIT READY H
7400 E31 — DN1 — DL-4 XMIT INT H
DL-4 RCVR DONE H

7400 E42 — DL-7 DATASET INT (1)H
+5V R19 10K J6 — DN1 DL-4 RCVR INT H

74175 E13
DL-2 BD05 H — DL-4 DATASET INT ENB (1)H
DL-2 BD02 H — +5V R20 10K J3 — CMI DL-4 REQ TO SEND (1)H
DL-4 REQ TO SEND (0)H
DL-2 BD06 H — DL-4 RCVR INT ENB (1)H
DL-2 BD03 H — CK1 DL-4 SEC XMIT (1)H
DL-4 SEC XMIT (0)H
CLR CLK

DL-4 DATA LEADS ONLY L
+5V R21 10K J4
DL-2 BD01 H — DTR 7474 E32 — CFI DL-4 DATA TERMINAL READY (1)H
DL-4 DATA TERMINAL READY (0)H
+5V R22 10K
DL-2 BD00 H — RDR ENB 7474 E32 — DL-4 RDR ENB (1) H
DL-5 BUS TO RCSR H

DL-4 RCVR BUSY (1)H — +5V R17 10K — 7474 E55 — 7404 E38
DL-2 BINIT H — 7408 E49 — 7402 E50
FSI DL-3 SI H — 8271 E44 — SHF — 7402 E50 — 7400 E42
DL-3 RCLK H FRI — 7474 E55
DL-4 SERIAL OUT H — 7474 E61
7404 E17 — R53 220 — C54 560pf — 7400 E20 SET 9 — CLR — CLKBC CLKØ
DL-3 XMIT CLK H
7400 E54 — 7408 E59 — J9 J11 J10

REVISIONS		
CHK.	CHANGE NO.	REV.

FIRST USED ON OPTION/MODEL: DLII	QTY.	DESCRIPTION	PART NO.	ITEM NO.
		PARTS LIST		

UNLESS OTHERWISE SPECIFIED DIMENSION IN INCHES. TOLERANCES
DECIMALS: .XXX = .005, XX = .02, .X = .1 — ANGLES: ±0° 30'
REMOVE BURRS AND BREAK SHARP CORNERS SURFACE QUALITY ✓
MATERIAL
FINISH

DRN. E Pinson	DATE	3/26/73
CHK'D. J Gilgenbach	DATE	4/11/73
ENG. [illegible]	DATE	4/11/73
PROJ. ENG. [illegible]	DATE	4/27/73
PROD. [illegible]	DATE	4/27/73
NEXT HIGHER ASSY.		
SCALE		
SHEET 1 OF 7		

digital EQUIPMENT CORPORATION MAYNARD, MASSACHUSETTS

TITLE ASYNCHRONOUS LINE INTERFACE (UART & STATUS) DL-4

SIZE	CODE	NUMBER	REV.
D	CS	M7800-0-1	D

DIST.

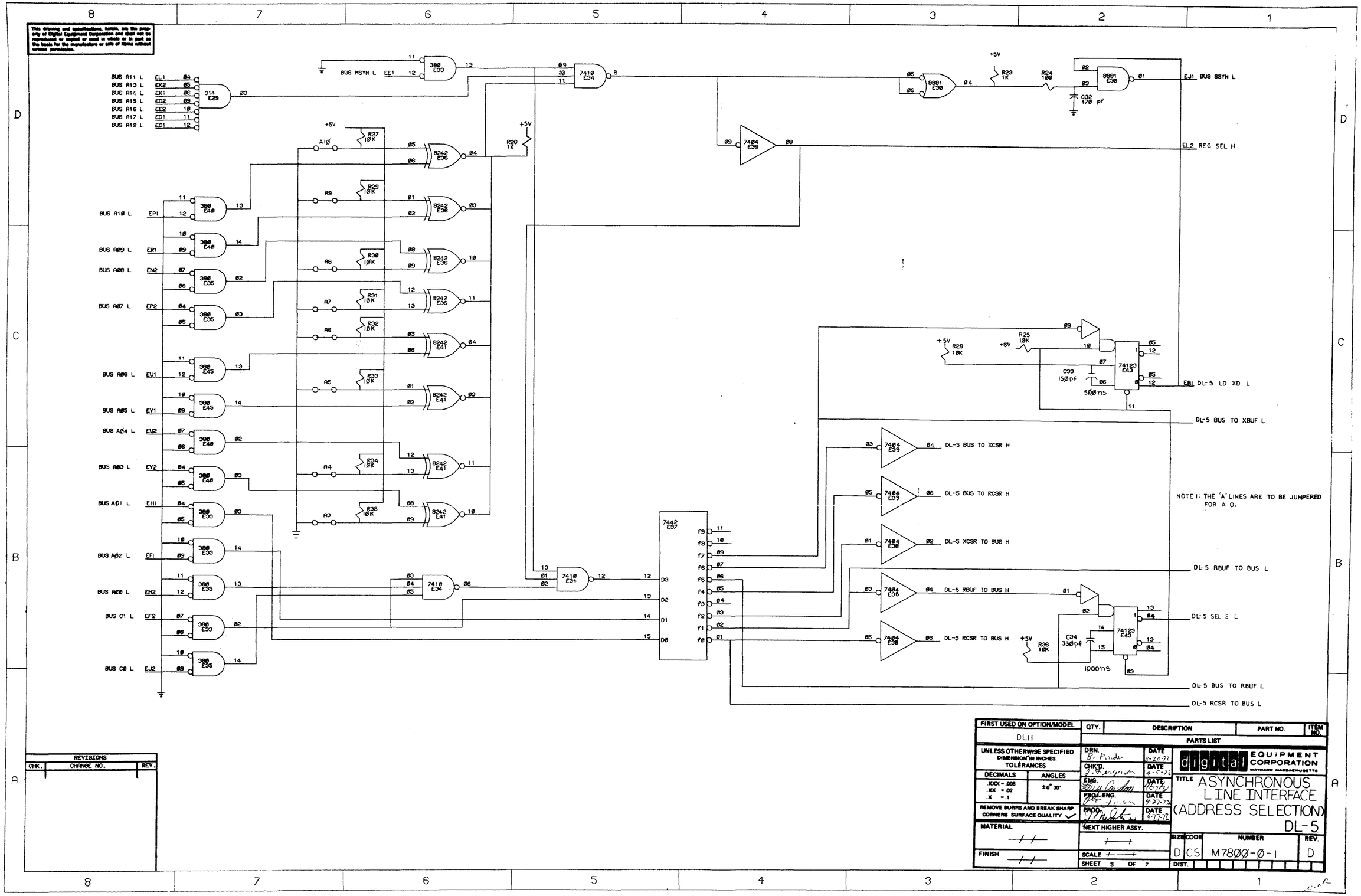

FIRST USED ON OPTION/MODEL	QTY.	DESCRIPTION	PART NO.	ITEM NO.
DL11		PARTS LIST		

UNLESS OTHERWISE SPECIFIED DIMENSION IN INCHES. TOLERANCES

DECIMALS	ANGLES
.XXX = .005 .XX = .02 .X = .1	±0° 30'

REMOVE BURRS AND BREAK SHARP CORNERS SURFACE QUALITY ✓

MATERIAL —/—

FINISH —/—

		DATE
DRN.	B. Pender	3-20-72
CHK'D.	J. Ferguson	4-5-72
ENG.	[illegible]	4-27-72
PROJ. ENG.	[illegible]	4-27-72
PROD.	[illegible]	4-27-72

NEXT HIGHER ASSY. —/—

SCALE —/—

SHEET 5 OF 7

digital EQUIPMENT CORPORATION MAYNARD MASSACHUSETTS

TITLE ASYNCHRONOUS LINE INTERFACE (ADDRESS SELECTION) DL-5

SIZE	CODE	NUMBER	REV.
D	CS	M7800-0-1	D

DIST.

REVISIONS		
CHK.	CHANGE NO.	REV.

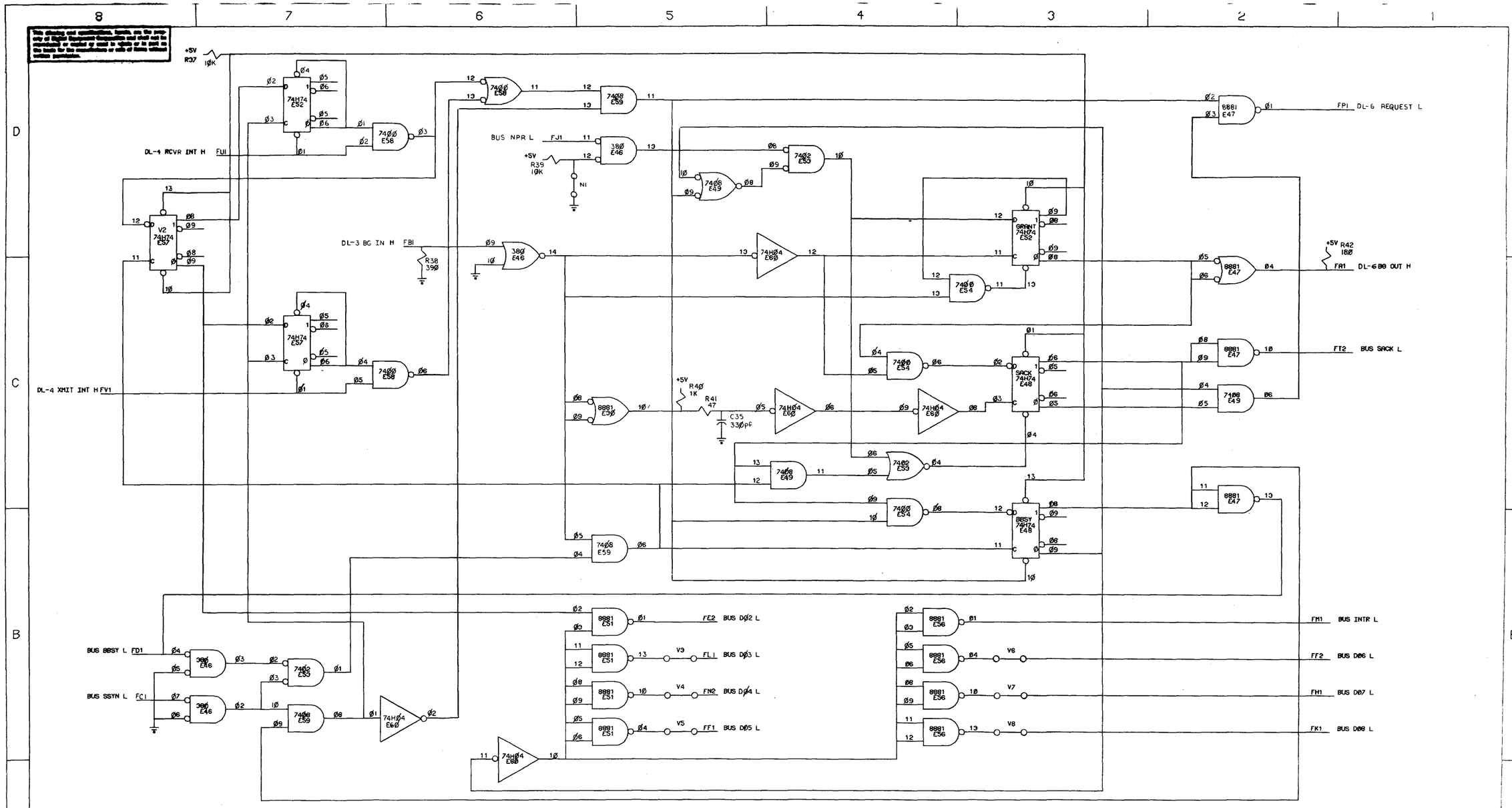

NOTE: THE "V" LINES ARE TO BE JUMPERED FOR A 1.

REVISIONS		
CHK.	CHANGE NO.	REV.

FIRST USED ON OPTION/MODEL: DL11	QTY.	DESCRIPTION	PART NO.	ITEM NO.
		PARTS LIST		

UNLESS OTHERWISE SPECIFIED DIMENSION IN INCHES. TOLERANCES
DECIMALS: .XXX = .005, .XX = .02, X = .1 — ANGLES: ±0° 30'
REMOVE BURRS AND BREAK SHARP CORNERS SURFACE QUALITY ✓
MATERIAL —
FINISH —

DRN. D Pinder DATE 3-20-74
CHK'D. DATE
ENG. DATE
PROJ.ENG. DATE
PROD. DATE

digital EQUIPMENT CORPORATION MAYNARD MASSACHUSETTS

TITLE ASYNCHRONOUS LINE INTERFACE (INTERRUPT CONTROL) DL-6

NEXT HIGHER ASSY. —
SCALE —
SHEET 6 OF 7

SIZE	CODE	NUMBER	REV.
D	CS	M7800-0-1	D

DIST.

This drawing and specifications, herein, are the property of Digital Equipment Corporation and shall not be reproduced or copied in whole or in part or the basis for the manufacture or sale of items without written permission.

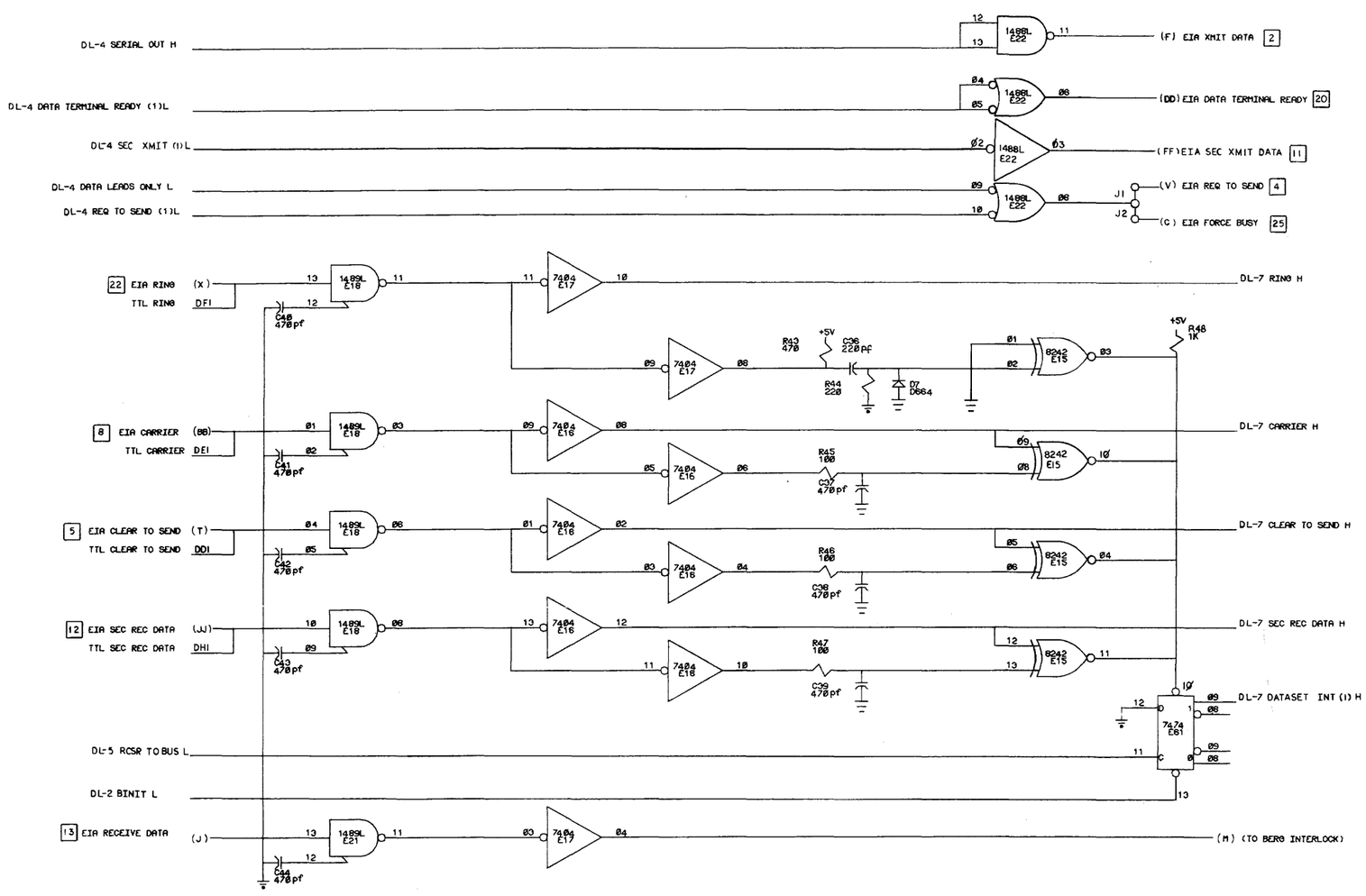

NOTES:

1. LETTERS ENCLOSED - EXAMPLE (M) REFER TO PINS ON THE BERG CONNECTOR.
2. NUMBERS WITHIN BOXES REFER TO PINS ON THE MALE CINCH CONNECTOR WHEN USING THE BC05-C CABLE. THIS CABLE ALSO CONNECTS BERG PINS M TO E.

REVISIONS		
CHK.	CHANGE NO.	REV.

FIRST USED ON OPTION/MODEL	QTY.	DESCRIPTION	PART NO.	ITEM NO.
DL11		PARTS LIST		

UNLESS OTHERWISE SPECIFIED DIMENSION IN INCHES. TOLERANCES

DECIMALS	ANGLES
.XXX = .005 .XX = .02 .X = .1	±0° 30'

REMOVE BURRS AND BREAK SHARP CORNERS SURFACE QUALITY ✓

MATERIAL —

FINISH —

DRN. B. Pelletier	DATE 5-??-72	digital EQUIPMENT CORPORATION MAYNARD, MASSACHUSETTS
CHK'D. D. Gustin	DATE 6-5-72	
ENG. Kenneth Cardin	DATE 6-??-72	TITLE ASYNCHRONOUS LINE INTERFACE (EIA DRIVERS & RECEIVERS) DL-7
PROJ. ENG.	DATE 6-27-72	
PROD.	DATE 6-27-72	
NEXT HIGHER ASSY. —		SIZE D CODE CS NUMBER M7800-0-1 REV. D
SCALE —		
SHEET 7 OF 7		DIST.

This drawing and specifications, herein, are the property of Digital Equipment Corporation and shall not be reproduced or copied or used in whole or in part as the basis for the manufacture or sale of items without written permission.

WIRE TABLE

ITEM NO.	DESCRIPTION AWG	DESCRIPTION COLOR	FROM CONNECTION	FROM WITH	TO CONNECTION	TO WITH
1	22	BLU/WHT	P1-1		J1-VV	
↓	↓	WHT/BLU	P1-2		J1-F	
		ORN/WHT	P1-3		J1-J	
		WHT/ORN	P1-4		J1-V	
		GRN/WHT	P1-5		J1-T	
		WHT/GRN	P1-6		J1-Z	
		BRN/WHT	P1-7		J1-UU	
		WHT/BRN	P1-8		J1-BB	
		SLA/WHT	P1-9		J1-Y	
		WHT/SLA	P1-10		J1-W	
		BLU/RED	P1-11		J1-FF	
		RED/BLU	P1-12		J1-JJ	
		ORN/RED	P1-13		J1-D	
↓	↓	SLA/RED	P1-14		J1-LL	
1	22	SLA/GRN	P1-15		J1-N	

ITEM NO.	DESCRIPTION AWG	DESCRIPTION COLOR	FROM CONNECTION	FROM WITH	TO CONNECTION	TO WITH
1	22	RED/BRN	P1-16		J1-NN	
↓	↓	SLA	P1-17		J1-R	
		RED/SLA	P1-18		J1-U	
		BLU/BLK	P1-19		J1-P	
		BLK/BLU	P1-20		J1-DD	
		ORN/BLK	P1-21		J1-MM	
		BLK/ORN	P1-22		J1-X	
		GRN/BLK	P1-23		J1-RR	
		BRN/RED	P1-24		J1-L	
		RED/ORN	P1-25		J1-C	
↓	↓	BLK	P1-1	4	J1-A	
1	22	BLK	P1-7	4	J1-B	
3	26	BLK	P1-1		P1-7	
2	26	RED	J1-E		J1-M	

LEGEND

NUMBER	VARIATION DIM X	VARIATION DIM Y (PRECUT)
BC05C-25	25'±3"	25'1.8"
BC05C-50	50'±2%	50'1.8"

NOTES:

1. MANUFACTURING SHOULD USE MACHINE CRIMPER TOOL FOR CRIMPING PINS (ITEM #7) MUST BE HT68 FROM BERG ELECT
2. ONLY DEC PART #1210090-0-0 MAY BE USED AS J1.

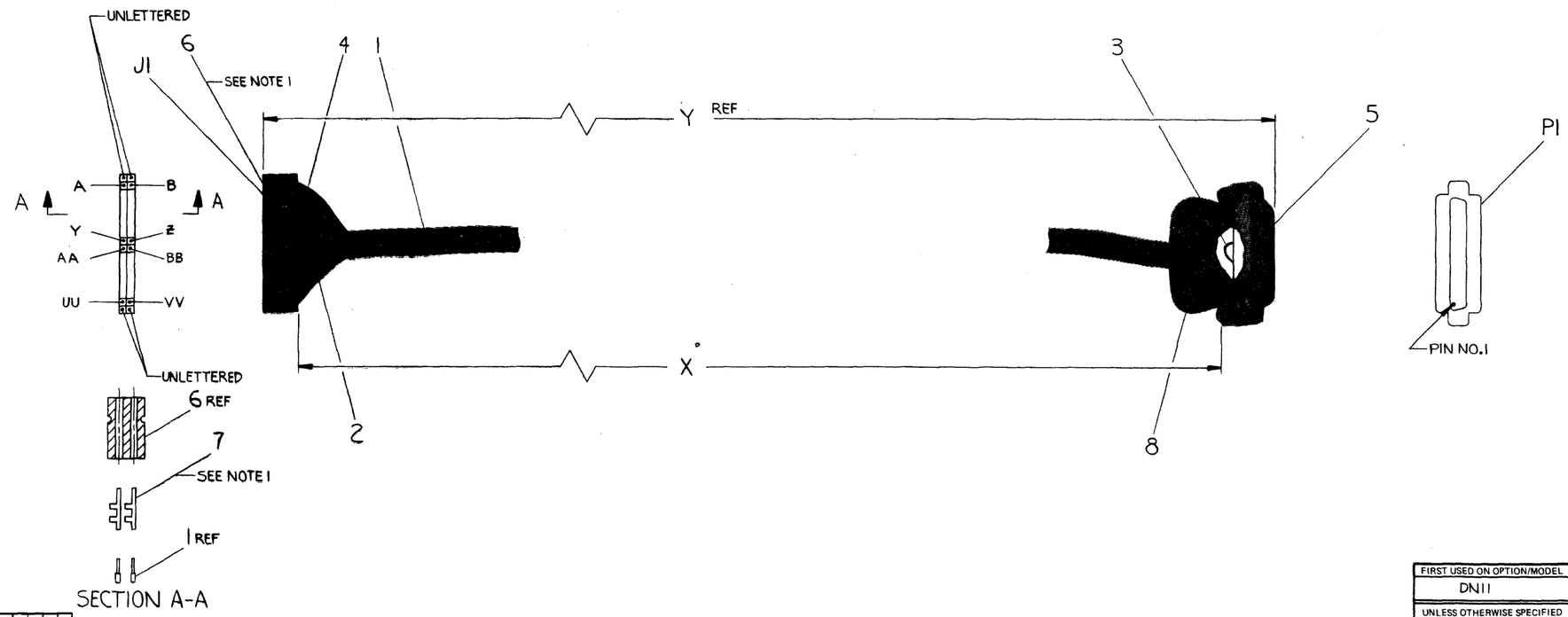

QTY.	DESCRIPTION	PART NO.	ITEM NO.
1	HOOD, #DB51226-1 CINCH	1205885	8
29	SOCKET, #HT-68	1210089-5	7
1	HOUSING, #20383 BERG	1210090-0-0	6
1	PLUG, #DB-25P CINCH	1205886	5
A/R	TUBING, #22 AWG TEF BLK	9107256-00	4
A/R	WIRE, #26 AWG STRD TEF BLK	9107636-00	3
A/R	WIRE, #26 AWG STRD TEF RED	9107636-22	2
A/R	CABLE, 25 CONDUCTOR	9107736	1

PARTS LIST

FIRST USED ON OPTION/MODEL: DN11

UNLESS OTHERWISE SPECIFIED DIMENSION IN INCHES. TOLERANCES

DECIMALS	ANGLES
.XXX = .005	±0°30'
.XX = .02	
.X = .1	

REMOVE BURRS AND BREAK SHARP CORNERS SURFACE QUALITY ✓

MATERIAL: —//—

FINISH: —//—

DRN. S Roberts DATE 11/3/71
CHK'D. R. Cook DATE 11/5/71
ENG. R. M. Smith DATE 11/5/71
PROJ. ENG. R. M. Smith DATE 11/5/71
PROD. R. J. Allen DATE 11/3/71

NEXT HIGHER ASSY.: —//—

SCALE: NONE

SHEET 1 OF 1

digital EQUIPMENT CORPORATION MAYNARD MASSACHUSETTS

TITLE: CABLE, MODEM BC05C

SIZE D | CODE UA | NUMBER BC05C-0-0 | REV. A

DIST.

REVISIONS: CHK | CHANGE NO. BC05C-00001 | REV. A | SMITH | 7-14-72

DEC FORM NO DRD 100-A

This drawing and specifications herein are the property of Digital Equipment Corporation and shall not be reproduced or copied or used in whole or in part as the basis for the manufacture or sale of items without written permission.

WIRE TABLE

ITEM NO.	DESCRIPTION AWG	DESCRIPTION COLOR	PAIR NO.	FROM CONNECTION	FROM WITH	TO CONNECTION	TO WITH
3	22	BLK	1	P1-2	2	P2-KK	5
3		RED		P1-3	2	P2-S	
3,7		SHIELD		SEE NOTE #2	—	P2-A(NOTE #3)	
3		BLK	2	P1-4	2	P2-EE	
3		WHT		P1-5	2	P2-AA	
3,7		SHIELD		SEE NOTE #2	—	P2-UU(NOTE #3)	
3		BLK	3	P1-6	2	P2-PP	
3		GRN		P1-7	2	P2-K	
3,7		SHIELD		SEE NOTE #2	—	P2-VV(NOTE #3)	
6	22	BLK	—	P2-E	5	P2-H	5

NOTES:

1. * ASTERISKS INDICATE CAVITIES NOT USED OR DESIGNATED BY LETTERS.
2. DRAIN WIRES TO BE CUT BACK TO OUTER INSULATION ON P1 END OF CABLE ONLY. SHIELDS TO BE CUT BACK TO OUTER INSULATION ON BOTH ENDS OF CABLES.
3. DRAIN WIRES ON P2 END OF CABLE TO BE EACH ENCLOSED WITH ITEM #7 (TUBING) FROM END OF CABLE JACKET TO POINT WHERE THEY ENTER P2 CONNECTOR.
4. ITEM #6 (WIRE) TO BE APPROXIMATELY ONE (1) INCH LONG.

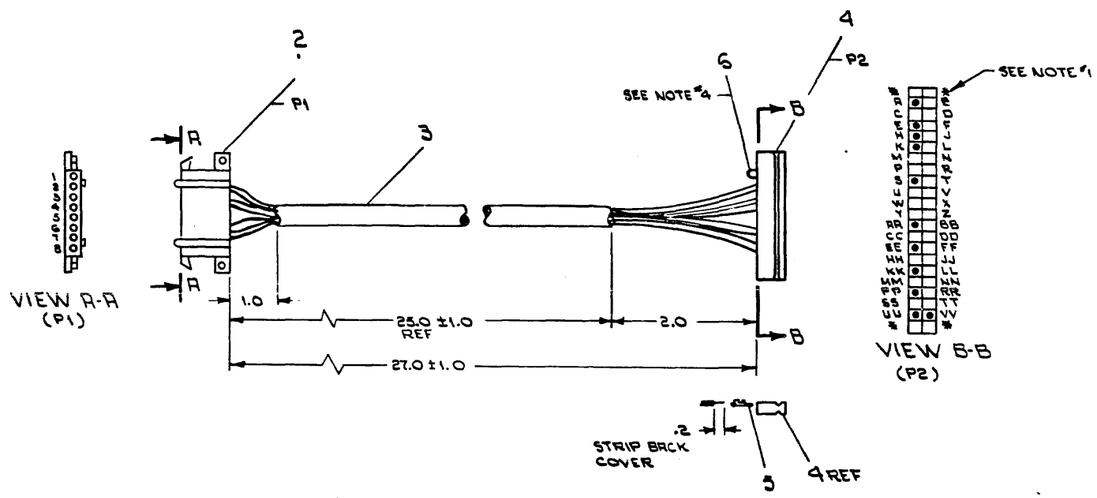

QTY	DESCRIPTION	PART NO.	ITEM NO.
A/R	TUB. #18 TEF. THINWALL NAT	9107278-11	7
A/R	WIRE, #22 AWG STRD TEF BLK	9107350-00	6
11	SOCKET, BERG #47706	1210089-6	5
1	HOUSING, BERG #20383	1210090-0	4
A/R	CABLE, BELDEN #8777-3PR SHLD	9107723-0	3
6	CONTACT MATE-N-LOCK (FEMALE)	1209379	2
1	CONN. MATE-N-LOCK (FEMALE)	1209340-00	1

PARTS LIST

FIRST USED ON OPTION/MODEL: PDP-8E

DO NOT SCALE DRAWING
UNLESS OTHERWISE SPECIFIED
DIMENSION IN INCHES
TOLERANCES
ANGLES ± 0°30'
FINAL SURFACE QUALITY
REMOVE BURRS AND BREAK SHARP CORNERS

MATERIAL: SEE PARTS LIST

FINISH

DRN. DATE 1-12-71
CHK'D. DATE
ENG. DATE 4-1-71
PROJ. ENG. DATE
PROD. DATE

NEXT HIGHER ASSY: A-ML-KL8-E-0

SCALE: NONE

SHEET 1 OF 1

DIGITAL EQUIPMENT CORPORATION
MAYNARD MASSACHUSETTS

TITLE: CABLE ASSEMBLY (KL8E)

SIZE D | CODE IA | NUMBER 7008360-0-0 | REV A

DIST

REVISIONS

CHK	CHANGE NO.	REV
	K-8E-0000	A

DEC FORM NO. FWD 100

This drawing and specifications, herein, are the property of Digital Equipment Corporation and shall not be reproduced or copied or used in whole or in part as the basis for the manufacture or sale of items without written permission.

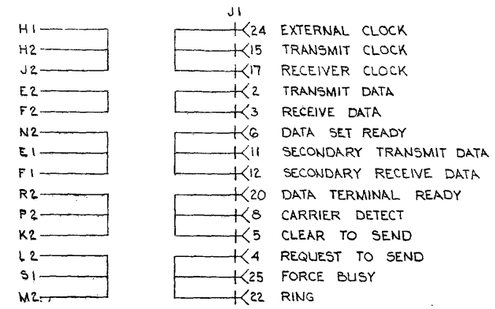

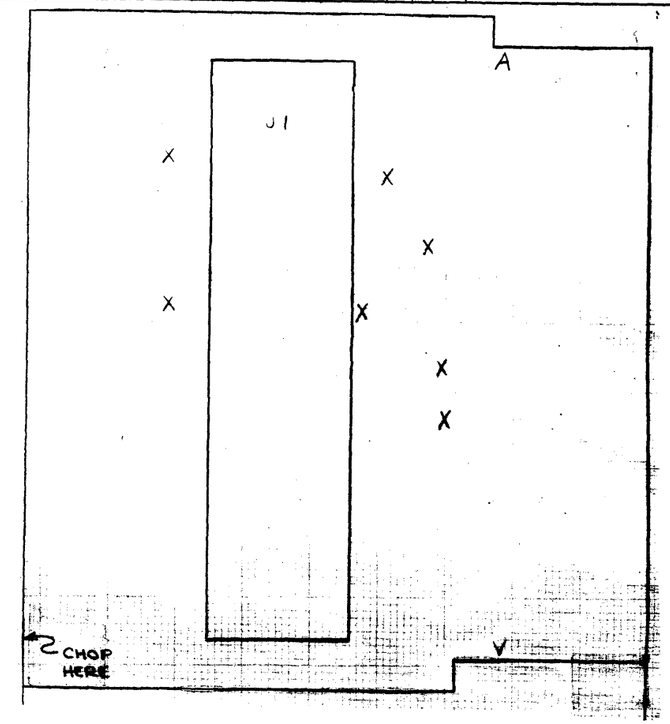

QTY	REF DESIGNATION	DESCRIPTION	PART NO.	ITEM NO.
7		EYELET FEED THRU	9006731	6
1	J1	CONN. CINCH DB-255-3	1210247	5
1		ETCHED CIRCUIT BOARD	5010020	4
		MODULE ECO HISTORY	B-[illegible]-H315-0-[illegible]	3
		ASSY/DRILLING HOLE LAYOUT	C-AH-H315-0-5	2
		X-Y COORDINATE HOLE LOCATION	K-CO-H315-0-4	1
QTY.	REF. DESIGNATION	DESCRIPTION	DEC PART NO.	[illegible]
		PARTS LIST		

PARTS LIST

ETCH BOARD REV A

REV	CHANGE NO.	REVISIONS	DEC NO.	EIA NO.	DEC NO.	EIA NO.
CHK						

SEMICONDUCTOR CONVERSION CHART

DRN. Roger J. Doucette DATE 3-9-72
CHK'D. [illegible] DATE 3-16-72
ENG. [illegible] DATE 3-13-72
PROD. ENG. [illegible] DATE 3-13-72
PROD. [illegible] DATE 3/24/72
NEXT HIGHER ASSY
SCALE
SHEET 1 OF 1

digital EQUIPMENT CORPORATION
MAYNARD, MASSACHUSETTS

TITLE
MODEM TEST CONNECTOR

SIZE D CODE CS NUMBER H315-0-1 REV.

DIST.

DEC FORM NO. DRD-135

digital EQUIPMENT CORPORATION MAYNARD MASSACHUSETTS

DRAWING DIRECTORY

"THIS DRAWING AND SPECIFICATIONS, HEREIN, ARE THE PROPERTY OF DIGITAL EQUIPMENT CORPORATION AND SHALL NOT BE REPRODUCED OR COPIED OR USED IN WHOLE OR IN PART AS THE BASIS FOR THE MANUFACTURE OR SALE OF ITEMS WITHOUT WRITTEN PERMISSION. COPYRIGHT © 10/23/72, DIGITAL EQUIPMENT CORPORATION"

CUSTOMER PRINT SET INDEX

THIS IS PRINT SET

SEQUENCE		SEQUENCE	
LIGHT PEN ASSY (375-Ø)	C-UA-375-Ø-Ø		

UNIT VARIATIONS

VAR	TITLE	PRINT SET 375-Ø
375-Ø	LIGHT PEN ASSY (375)	x

REVISIONS: REV / CHG. NO. / DATE

USED ON OPTION/MODEL

SHEET 1 OF 3

DRN. C.MCCOY	DATE 10/11/2	TITLE LIGHT PEN ASSY (375)
CHK'D. R K Golb	DATE 10-22-72	
PROJ ENG. H E Lavoce	DATE 10/24/72	
PROD. R McCauley	DATE 10/20/72	SIZE B / CODE DD / NUMBER 375-Ø / REV
FIELD SERV. R B O'Donnell	DATE 10/26/72	DIST

DRB 106

DEC 16-(325)-1062-1A-R972

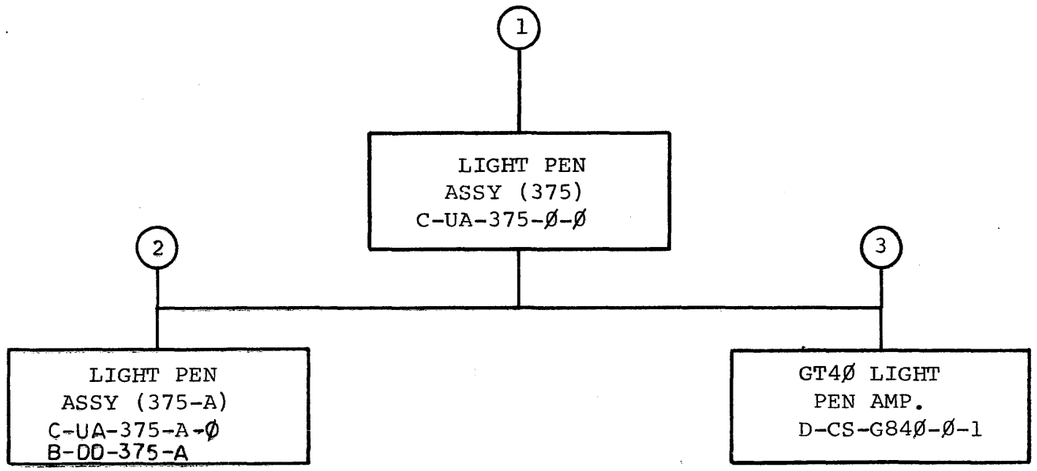

TITLE		SIZE	CODE	NUMBER	REV
LIGHT PEN ASSY (375)	SHEET 2 OF 3	B	DD	375-Ø	

DRB 107
DEC 16—(325)—1062—3—N871

ELECTRICAL

CUSTOMER PRINT SET 375-Ø	SET MFG.	FIND NO.	DRAWING NO.	REV	NO OF SHT	DESCRIPTION	OPTION NO./FILE DATE
X		3	D-CS-G84Ø-Ø-1		2	GT4Ø LIGHT PEN AMP.	

MECHANICAL

CUSTOMER PRINT SET 375-Ø	SET MFG	FIND NO.	DRAWING NO.	REV	NO OF SHT	DESCRIPTION	OPTION NO./FILE DATE
X		1	C-UA-375-Ø-Ø	#	1	LIGHT PEN ASSY (375-Ø)	
			1209608		1	CABLE	
		2	C-UA-375-A-Ø	#	1	LIGHT PEN ASSY (375-A)	
			B-DD-375-A	#	3	LIGHT PEN ASSY (375-A)	
		3	D-CS-G84Ø-Ø-1		2	GT4Ø LIGHT PEN AMP.	

CUSTOMER PRINT SET CODES

X = PRINT OF DOCUMENT INCLUDED IN PRINT SET
C = INCLUDES ALL PRINTS INDICATED ON DOCUMENT
S = CONFIDENTIAL AUTHORIZED SIGNATURE REQUIRED

TITLE	SHEET	SIZE	CODE	NUMBER	REV
LIGHT PEN ASSY (375)	3 OF 3	B	DD	375-Ø	

DRB 108

This drawing and specifications, herein, are the property of Digital Equipment Corporation and shall not be reproduced or copied or used in whole or in part as the basis for the manufacture or sale of items without written permission.

NOTES:
1. ITEM #3 (L.P. AMPLIFIER) REPLACES THE G833 PHOSPHOR PROTECT MODULE IN SLOT AØ1 IN THE VR14.
2. MAIN CHASSIS HARNESS SUPPLIED WITH EXISTING HARDWARE.

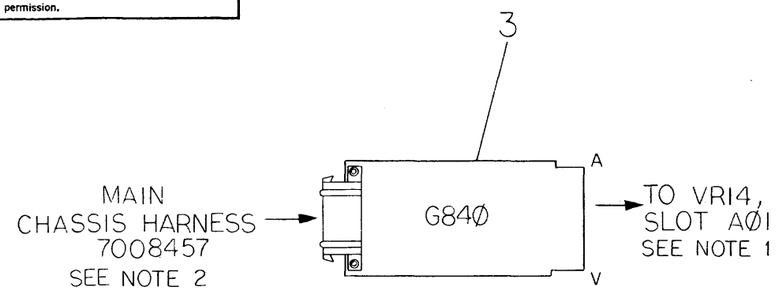

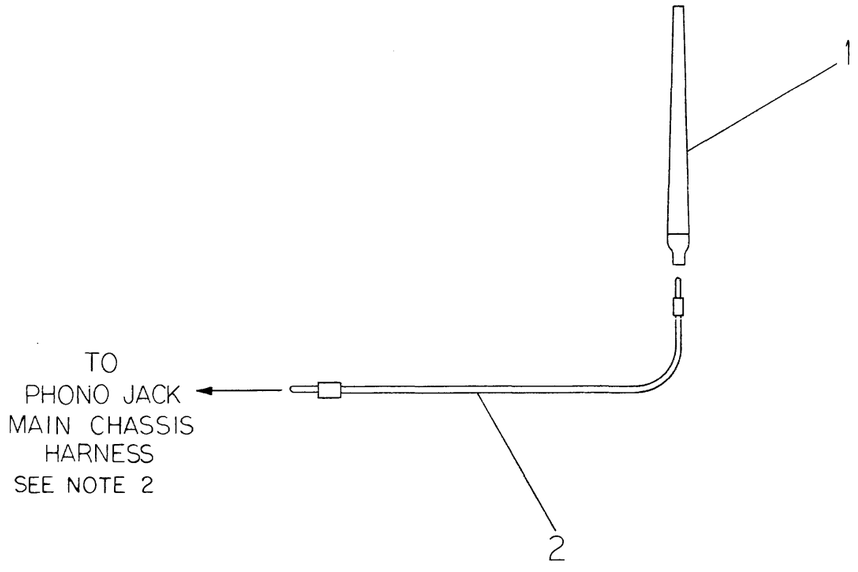

1	GT4Ø LIGHT PEN AMP.	G84Ø	3
1	CABLE, SWITCHCRAFT	1209608	2
1	LIGHT PEN ASSY (375-A)	C-UA-375-A-Ø	1
QTY.	DESCRIPTION	PART NO.	ITEM NO.

PARTS LIST

FIRST USED ON OPTION/MODEL: VR14

UNLESS OTHERWISE SPECIFIED DIMENSION IN INCHES. TOLERANCES

DECIMALS	ANGLES
.XXX = .005 .XX = .02 .X = .1	±0° 30'

REMOVE BURRS AND BREAK SHARP CORNERS SURFACE QUALITY ✓

MATERIAL —"—

FINISH —"—

DRN. CBMcG	DATE 10-12-72	
CHK'D.	DATE	
ENG.	DATE	
PROJ. ENG.	DATE	
PROD.	DATE	

NEXT HIGHER ASSY. B-DD-375-Ø

SCALE NONE

SHEET 1 OF 1

digital EQUIPMENT CORPORATION MAYNARD MASSACHUSETTS

TITLE: LIGHT PEN ASS'Y (375)

SIZE	CODE	NUMBER	REV.
C	UA	375-Ø-C	

DIST.

REVISIONS

REV.	CHANGE NO.	CHK

SIZE C CODE UA NUMBER 375-Ø-Ø REV.

DEC FORM NO. DRG 109-A

This drawing and specification, the design, and the proprietary of Digital Equipment Corporation and shall not be reproduced or copied or used in whole or in part as the basis for the manufacture or sale of items without written permission. © NOV 1972

NOTES:

1. PLACE ITEM #40 (TERMINAL) ON ITEM #25 (RESISTOR) R21.

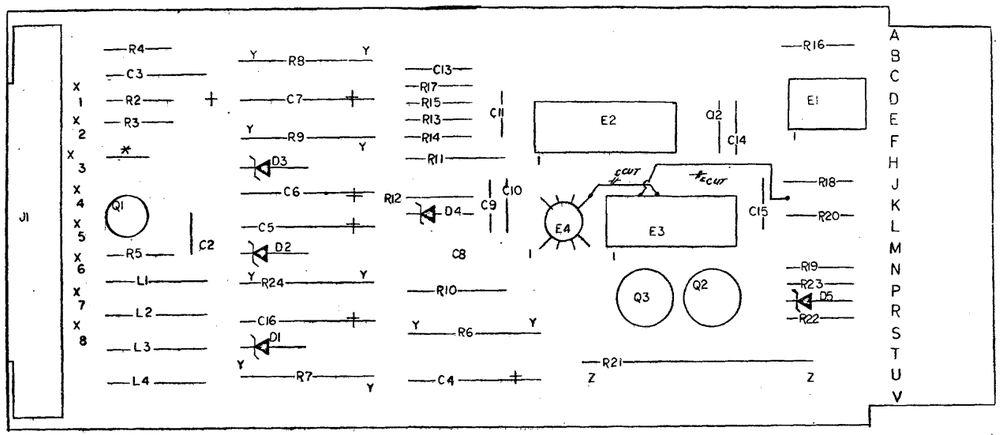

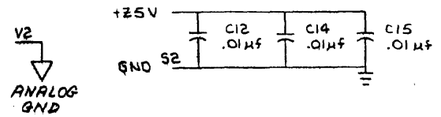

IC 9602	8 / 16
IC 75453	4 / 8
IC TYPE	GND / + 5V

GND AND 5V ARE USUALLY PIN 7 AND 14 RESPECTIVELY EXCEPTIONS ARE STATED ABOVE

IC PIN LOCATIONS

BRUNING 40-522 16699

DEC FORM NO DRD-135A

QTY	REF DESIGNATION	DESCRIPTION	PART NO.	ITEM NO.
1		INSULATED JUMPER (1/4")	9009185	41
2		SOLDER TERMINAL #2027-2 CAMBION	9008085	40
2		EYELET GS4-7 STIMPSON	9006732	39
8		PIN SOCKET #61320-1 (MATE-N-LOCK)	1209456	38
1		CONN MATE-N-LOCK (6 SOCKET) #1-480459	1209340-00	37
1	E3	IC DEC 74H04	1909931	36
1	E1	IC 75453	1911036	35
1	E2	IC 9602	1910951	34
1	E4	IC LM306	1909675	33
4	L1, L2, L3, L4	CHOKE 2200 UH 10% 99 ma	1603421	32
1	Q1	TRANS DEC 6534B	1503409-01	31
1	Q3	TRANS 2N2904A	1501913	30
1	Q2	TRANS DEC 2219-3	1501891	29
1	R5	RES 180 5% 1/4W	1301322	28
1	R14	RES 68K 5% 1/4W	1301327	27
2	R10, R11	RES 10K 1% 1/8W MF	1302886	26
1	R21	RES 150 5% 5W WW	1301898	25
2	R3, R18	RES 2.2K, 5% 1/4W	1300417	24
2	R7, R8	RES 10, 5% 1 W	1300171	23
1	R22	RES 10, 5% 1/4 W	1301317	22
4	R2, R13, R17, R23	RES 4.7K, 5% 1/4W	1300447	21
2	R4, R15	RES 1K 5% 1/4 W	1300365	20
1	R12	RES 470, 5% 1/4 W	1300316	19
1	R6	RES 100 5% 2W	1302380	18
2	R16, R20	RES 150 5% 1/4 W	1300250	17
2	R9, R24	RES 100 5% 1W	1300232	16
1	R19	RES 100 5% 1/4W	1300229	15
1	D9	DIODE IN 746A, 3.6V 5%, 400W	1104860	14
2	D1, D5	DIODE 1N4733A 5.1V, 5% 1W	1109443	13
2	D2, D3	DIODE IN4744	1105648	12
5	C4, C5, C6, C7, C16	CAP 6.8UF, 10%, 35V TANT	1005306	11
1	C13	CAP .047UF, 20%, 250V MYLAR	1003053	10
1	C3	CAP 1.0UF, 10%, 35V TANT	1001776	9
5	C15, C12, C14, C10, C9	CAP .01UF, 20%, 50V	1001610-00	8
1	C11	CAP 47PF 5% 100V DM	1000011	7
1	C8	CAP .02UF 20% 100V DISC	1000004	6
1	C2	CAP 100PF 5% 100V DM	1000016	5
1		ETCHED CIRCUIT BOARD	5010281	4
REF		MODULE ECO HISTORY	B-MH-G840-0-6	3
REF		ASSY/DRILLING HOLE LAYOUT	D-AH-G840-0-5	2
REF		XY COORDINATE HOLE LOCATION	K-CO-G840-0-4	1

PARTS LIST

FIRST USED ON OPTION MODEL: VT40

ETCH BOARD REV: C

ORIGINATED REV	CHANGE NO.	REVISIONS	DEC NO.	EIA NO.
B		DEC 6534B		SAME
		2N2904A		SAME
		DEC 2219-3		SAME
		IN4733A		SAME
		IN746A		SAME
		IN4744		SAME
CHK		DEC NO.	EIA NO.	

SEMICONDUCTOR CONVERSION CHART

DRN.	DATE 11/3/72
CHK'D.	DATE 9/26/72
ENG.	DATE 11-9-72
PROJ. ENG.	DATE 11/1/72
PROD.	DATE 11/6/72
NEXT HIGHER ASSY	
SCALE	
SHEET 1 OF 2	

digital EQUIPMENT CORPORATION MAYNARD, MASSACHUSETTS

TITLE: VT 40 LIGHT PEN AMPLIFIER

SIZE D | CODE CS | NUMBER G840-0-1 | REV. B

DIST.

This drawing and specifications, herein, are the property of Digital Equipment Corporation and shall not be reproduced or copied or used in whole or in part as the basis for the manufacture or sale of items without written permission. © NOV 1972

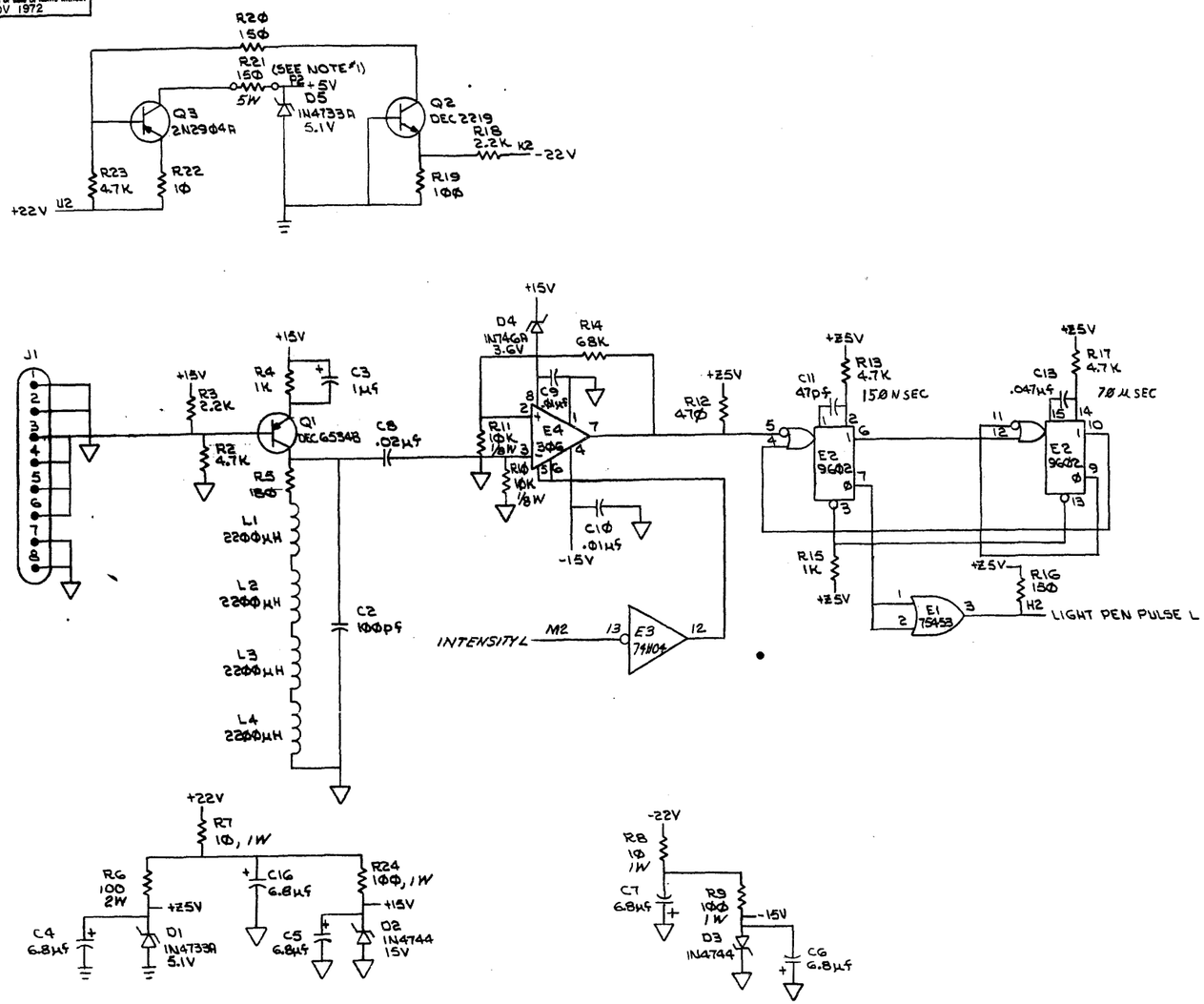

FIRST USED ON OPTION/MODEL	QTY.	DESCRIPTION	PART NO.	ITEM NO.
VT40		PARTS LIST		

UNLESS OTHERWISE SPECIFIED DIMENSION IN INCHES. TOLERANCES

DECIMALS	ANGLES
.XXX = .005	±0° 30'
.XX = .02	
.X = .1	

REMOVE BURRS AND BREAK SHARP CORNERS SURFACE QUALITY ✓

MATERIAL —"—

FINISH —"—

		DATE
DRN.	F. J. [signature]	3Nov72
CHK'D.	NANCY MOORE	11-9-72
ENG.	[signature]	11-9-72
PROJ. ENG.	H E Lavoie	11/9/72
PROD.	[signature]	11/9/72

NEXT HIGHER ASSY. —"—

SCALE —"—

SHEET 2 OF 2

digital EQUIPMENT CORPORATION MAYNARD MASSACHUSETTS

TITLE

VT40 LIGHT PEN AMPLIFIER

SIZE	CODE	NUMBER	REV.
D	CS	G840-0-1	B

DIST.

REVISIONS: CHK | CHANGE NO | REV

BRUNING 40-522 15840

DEC FORM NO DRD 107-B